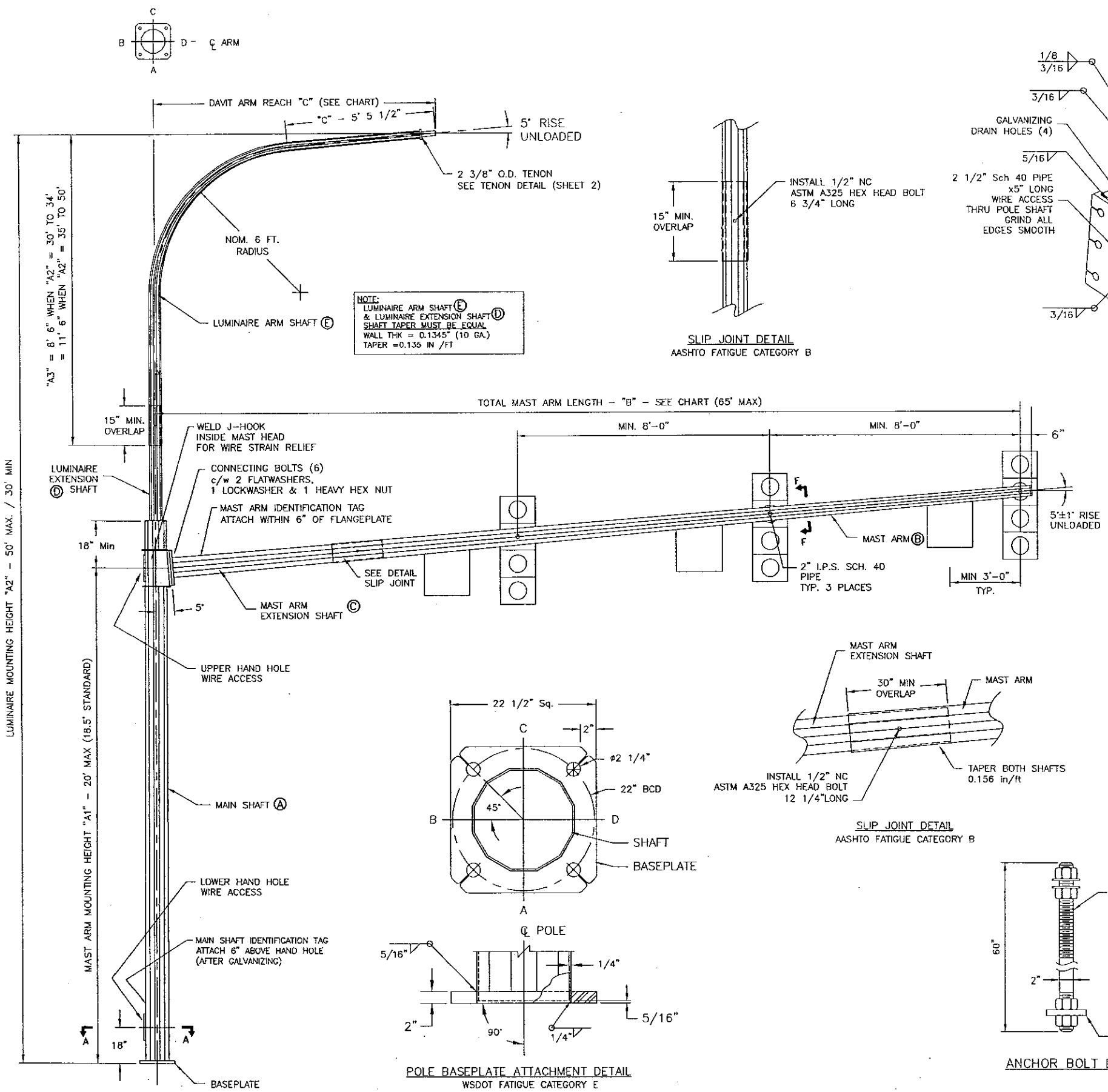

Ⓐ MAIN SHAFT (1)			
AFB (3)	AFT (4)	THK	LENGTH
16"	15"	1/4"	21' 6" MAX

Ⓑ MAST ARM SHAFT (1)			
AFB (3)	AFT(4)	THK	LENGTH
11 1/4"	5"	3/16"	40'

(1) DODECAGON SECTION (12 SIDED)
(2) X–SECTION AREA OF SIGNAL OR SIGN x DISTANCE FROM CENTERLINE OF SIGNAL OR SIGN TO CENTERLINE OF MAIN SHAFT
(3) AFB – "ACROSS THE FLATS" AT THE BASE OF THE SHAFT
(4) AFT – "ACROSS THE FLATS" AT THE TOP OF THE SHAFT

TOTAL MAST ARM LENGTH "B"	Ⓒ MAST ARM EXTENSION SHAFT (1)				CONNECTING BOLTS (6 SETS)		SIGN & SIGNAL MAX. (2) LOADING XYZ
	AFB (3)	AFT (4)	THK	LENGTH	DIA.	LENGTH	
50'	12 3/8"	10 7/16"	1/4"	12' 6"	1 1/2"	6 1/4"	2134.8
55'	13 3/16"	10 7/16"	1/4"	17' 6"	1 1/2"	6 1/4"	2394.3
60'	13 15/16"	10 7/16"	1/4"	22' 6"	1 1/2"	6 1/4"	2653.8
65'	14 3/4"	10 7/16"	1/4"	27' 6"	1 1/2"	6 1/4"	2913.3

THK.=10Ga.	Ⓓ LUMIN. EXT SHAFT (1)		
LUMIN. MOUNT HT. "A2"	AFB(3)	AFT (4)	SHAFT LENGTH
30'	5 3/8"	5 1/8"	1' 9"
35'	6"	5 1/2"	3' 9"
40'	6 11/16"	5 1/2"	8' 9"
45'	7 3/8"	5 1/2"	13' 9"
50'	8 1/16"	5 1/2"	18' 9"

(1) DODECAGON SECTION (12 SIDED)
(2) X–SECTION AREA OF SIGNAL OR SIGN x DISTANCE FROM CENTERLINE OF SIGNAL OR SIGN TO CENTERLINE OF MAIN SHAFT
(3) AFB – "ACROSS THE FLATS" AT THE BASE OF THE SHAFT
(4) AFT – "ACROSS THE FLATS" AT THE TOP OF THE SHAFT

THK.=10Ga.	Ⓔ LUMIN. ARM SHAFT (1) "A2" = 35' to 50'			Ⓔ LUMIN. ARM SHAFT(1) "A2" = 30' to 34'		
LUM. ARM REACH "C"	AFB(3)	AFT (4)	SHAFT LENGTH	AFB(3)	AFT(4)	SHAFT LENGTH
6'	6"	4 1/16"	14' 8"	5 5/8"	4 1/16"	11' 8"
8'	6"	3 13/16"	16' 6"	5 5/8"	3 13/16"	13' 6"
10'	6"	3 9/16"	18' 4"	5 5/8"	3 9/16"	15' 4"
12'	6"	3 5/16"	20' 2"	5 5/8"	3 5/16"	17' 2"
14'	6"	3 1/16"	22' 0"	5 5/8"	3 1/16"	19' 0"
16'	6"	2 13/16"	23' 10"	5 5/8"	2 13/16"	20' 10"

DESIGN: ALL STANDARDS ARE DESIGNED TO THE 2001 AASHTO STANDARD SPECIFICATIONS FOR STRUCTURAL SUPPORTS FOR HIGHWAY SIGNS, LUMINAIRES AND TRAFFIC SIGNALS.
DESIGN WIND SPEED – 90 MPH (3 SECOND GUST WIND SPEED)
DESIGN LIFE / RECURRENCE INTERVAL – 25 YEAR
FATIGUE CATEGORY – III (GALLOPING, NATURAL & TRUCK GUSTS)
MAXIMUM TRUCK GUST WIND SPEED – 65 MPH
EACH STRUCTURE HAS A LOAD CAPACITY AS SHOWN IN THE ABOVE CHART. DESIGN AREAS OF SIGNS AS SIGNALS AS FOLLOWS:

TRAFFIC SIGNAL
FACE AREA = 12.3 FT.^{2}
WIND DRAG COEFFICIENT = 1.2
WEIGHT = 80 LB.
ICE AREA = 32 FT.^{2}

TRAFFIC SIGN
FACE AREA = 6.7 FT.^{2}
WIND DRAG COEFFICIENT = 1.12
WEIGHT = 25 LB.
ICE AREA = 6.7 FT.^{2}

WELDING: WELDING OF STRUCTURES SHALL BE IN ACCORDANCE WITH THE CURRENT AASHTO SPECIFICATIONS FOR STRUCTURAL SUPPORTS OF HIGHWAY SIGNS, LUMINAIRES & TRAFFIC SIGNALS. LONGITUDINAL SEAM WELD IS 60% MINIMUM PENETRATION EXCEPT IN 6 INCHES FROM END OF SECTIONS IT IS 100% PENETRATION.

FINISH: ALL COMPONENTS TO BE HOT DIP GALVANIZED AS PER ASTM A123 / A153

MATERIAL DATA (UNLESS OTHERWISE NOTED)	
COMPONENT	GRADE
ALL TAPERED TUBES	ASTM A572 Gr. 50
BASE PLATE	ASTM A36
FLANGE PLATES	ASTM A36
PIPE TENONS	ASTM A53 Gr. B
ANCHOR BOLTS	ASTM A449
CONNECTING BOLTS	ASTM A325 – Type 1
NUTS	ASTM A563–DH
FLAT WASHERS	ASTM F436

PROFESSIONAL ENGINEER
S. D. BRADWELL
BRITISH COLUMBIA
24-SEP-02

No. REQ'D.	W.O. No.	FILE No.	DATE	P.O. No.	CUSTOMER	LOCATION

REV. No.	CHANGE	BY	APP.	DATE
1	UPDATES AS PER WSDOT REQUESTS	S.B.		09–02

APS Inc.
American Pole Structures Inc.

TITLE
WSDOT TYPE III TRAFFIC STRUCTURE
65' MAX. MAST ARM LENGTH
"J" STYLE LUMINAIRE ARM

DRAWN BY	S.B.	APP. BY		DWG. No.	REV. No.	SHT. 1 of 2 SHTS.
DATE	10–AUG–02	SCALE	N.T.S.	WS–T3J–H	1	