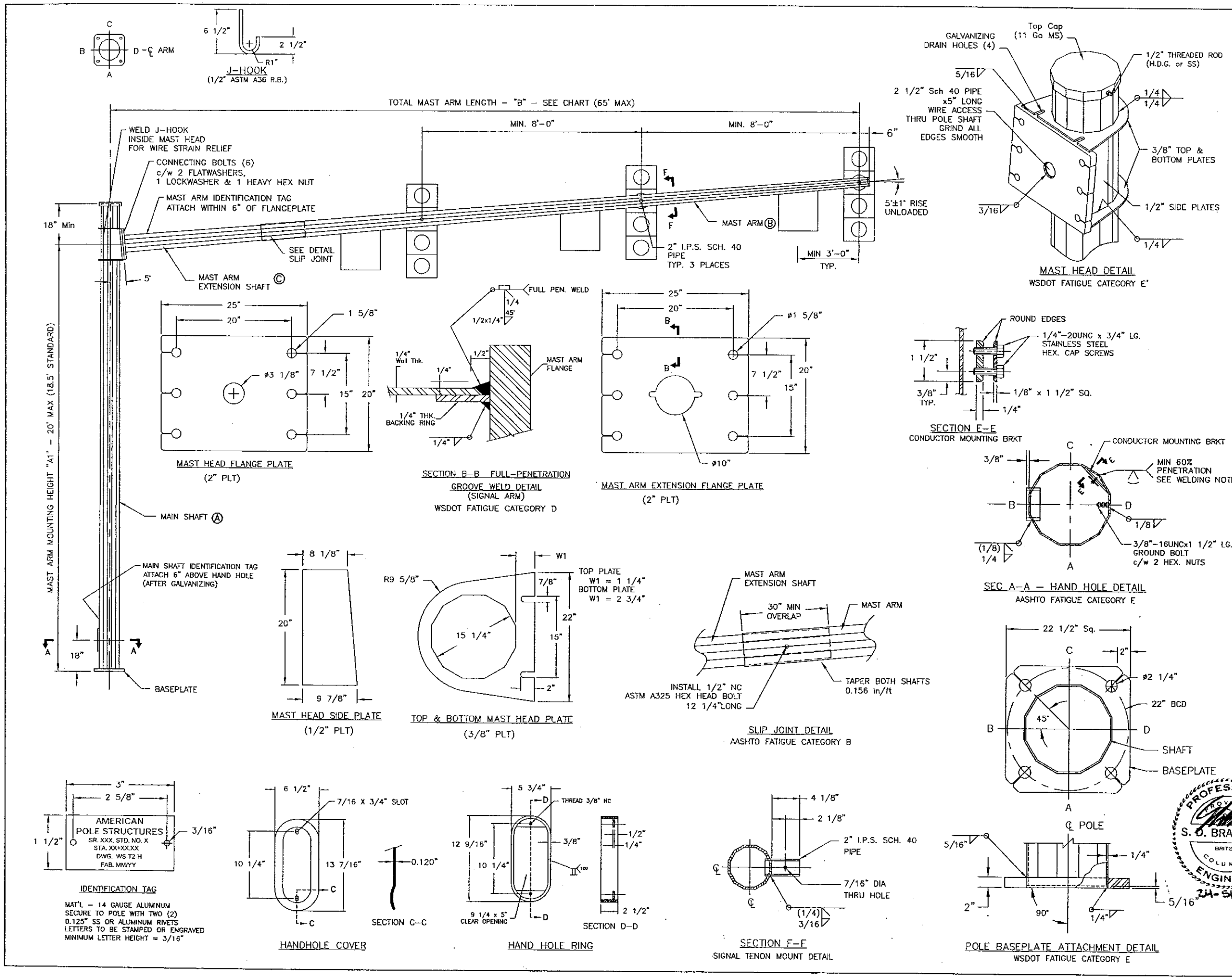

Ⓐ MAIN SHAFT (1)			
AFB (3)	AFT (4)	THK	LENGTH
16"	15"	1/4"	21' 6" MAX

Ⓑ MAST ARM SHAFT (1)			
AFB (3)	AFT (4)	THK	LENGTH
11 1/4"	5"	3/16"	40'

(1) DODECAGON SECTION (12 SIDED)
(2) X-SECTION AREA OF SIGNAL OR SIGN x DISTANCE FROM CENTERLINE OF SIGNAL OR SIGN TO CENTERLINE OF MAIN SHAFT
(3) AFB – "ACROSS THE FLATS" AT THE BASE OF THE SHAFT
(4) AFT – "ACROSS THE FLATS" AT THE TOP OF THE SHAFT

TOTAL MAST ARM LENGTH "B"	Ⓒ MAST ARM EXTENSION SHAFT (1)				CONNECTING BOLTS (6 SETS)		SIGN & SIGNAL MAX. (2) LOADING XYZ
	AFB (3)	AFT (4)	THK	LENGTH	DIA.	LENGTH	
50'	12 3/8"	10 7/16"	1/4"	12' 6"	1 1/2"	6 1/4"	2134.8
55'	13 3/16"	10 7/16"	1/4"	17' 6"	1 1/2"	6 1/4"	2394.3
60'	13 15/16"	10 7/16"	1/4"	22' 6"	1 1/2"	6 1/4"	2653.8
65'	14 3/4"	10 7/16"	1/4"	27' 6"	1 1/2"	6 1/4"	2913.3

DESIGN: ALL STANDARDS ARE DESIGNED TO THE 2001 AASHTO STANDARD SPECIFICATIONS FOR STRUCTURAL SUPPORTS FOR HIGHWAY SIGNS, LUMINAIRES AND TRAFFIC SIGNALS.
DESIGN WIND SPEED – 90 MPH (3 SECOND GUST WIND SPEED)
DESIGN LIFE / RECURRENCE INTERVAL – 25 YEAR
FATIGUE CATEGORY – III (GALLOPING, NATURAL & TRUCK GUSTS)
MAXIMUM TRUCK GUST WIND SPEED – 65 MPH
EACH STRUCTURE HAS A LOAD CAPACITY AS SHOWN IN THE ABOVE CHART. DESIGN AREAS OF SIGNS AS SIGNALS AS FOLLOWS:

TRAFFIC SIGNAL
FACE AREA = 12.3 FT^2
WIND DRAG COEFFICIENT = 1.2
WEIGHT = 80 LB.
ICE AREA = 32 $FT.^2$

TRAFFIC SIGN
FACE AREA = 6.7 $FT.^2$
WIND DRAG COEFFICIENT = 1.12
WEIGHT = 25 LB.
ICE AREA = 6.7 $FT.^2$

WELDING: WELDING OF STRUCTURES SHALL BE IN ACCORDANCE WITH THE CURRENT AASHTO SPECIFICATIONS FOR STRUCTURAL SUPPORTS OF HIGHWAY SIGNS, LUMINAIRES & TRAFFIC SIGNALS. LONGITUDINAL SEAM WELD IS 60% MINIMUM PENETRATION EXCEPT IN 6 INCHES FROM END OF SECTIONS IT IS 100% PENETRATION.

FINISH: ALL COMPONENTS TO BE HOT DIP GALVANIZED AS PER ASTM A123 / A153

MATERIAL DATA (UNLESS OTHERWISE NOTED)	
COMPONENT	GRADE
ALL TAPERED TUBES	ASTM A572 Gr. 50
BASE PLATE	ASTM A36
FLANGE PLATES	ASTM A36
PIPE TENONS	ASTM A53 Gr. B
ANCHOR BOLTS	ASTM A449
CONNECTING BOLTS	ASTM A325 – Type 1
NUTS	ASTM A563-DH
FLAT WASHERS	ASTM F436

No. REQ'D.	W.O. No.	FILE No.	DATE	P.O. No.	CUSTOMER	LOCATION

REV. No.	CHANGE	BY	APP.	DATE
1	UPDATES AS PER WSDOT REQUESTS			

APS Inc. American Pole Structures Inc.

TITLE: WSDOT TYPE II TRAFFIC STRUCTURE 65' MAX. MAST ARM LENGTH

DRAWN BY	S.B.	APP. BY	
DATE	10-AUG-02	SCALE	N.T.S.

DWG. No. WS-T2-H | REV. No. 1 | SHT. 1 of 1 SHTS.