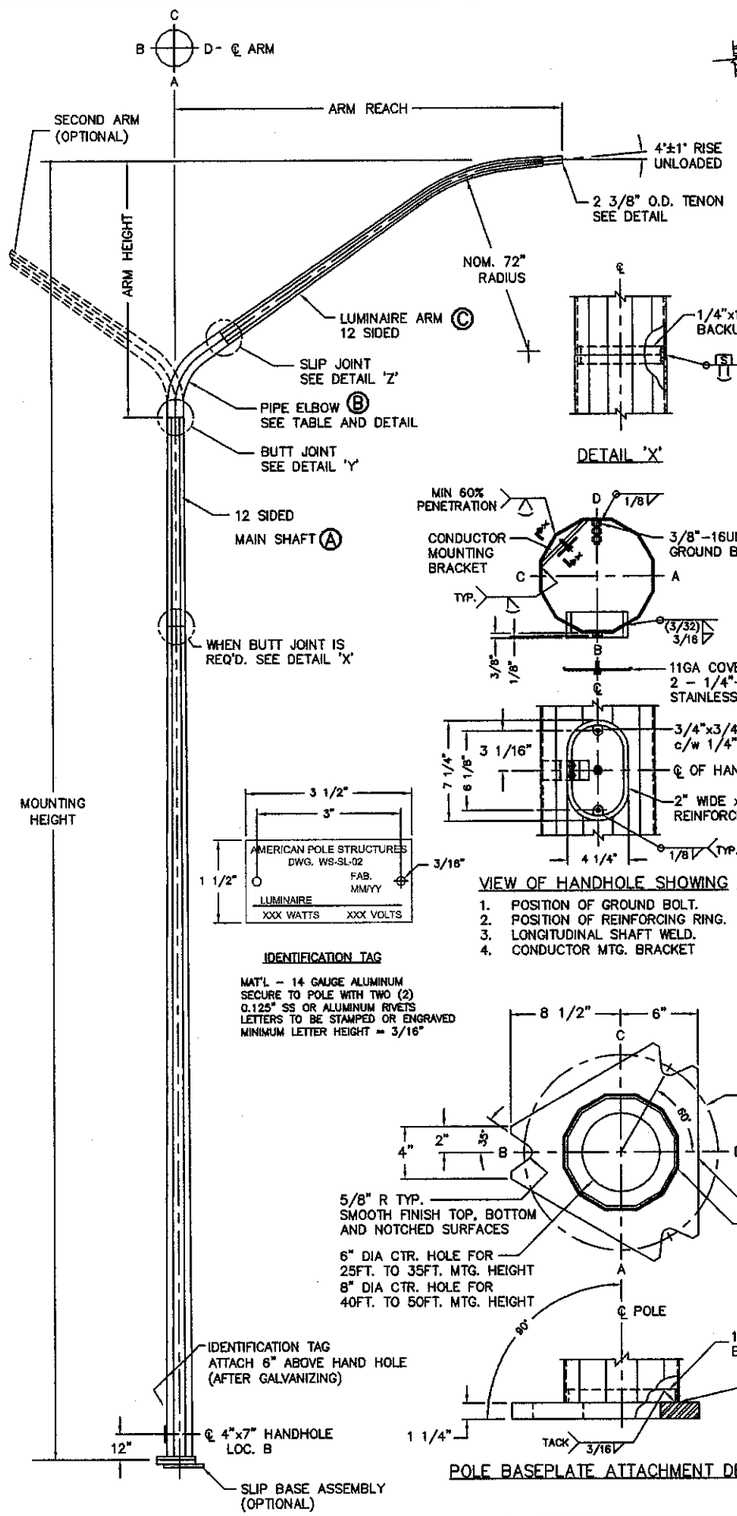

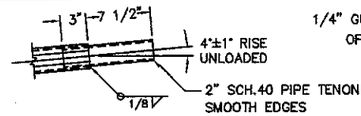

TENON DETAIL

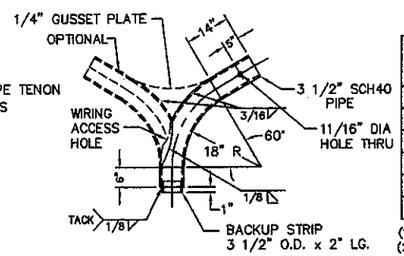

ELBOW DETAIL FOR 6 FT., 8 FT. & 10 FT. ARM REACH

LUM. ARM REACH	Ⓑ LUMIN. ARM ELBOW SCH 40 PIPE			Ⓒ LUMIN. ARM SHAFT 11GA (.1196") 12 SIDED SECTION		
	DIA.	RADIUS (1)	ARM HT. "H1"	AFB(3)	AFT(4)	SHAFT LENGTH
6'	4"	18"	2' 8"	3 7/8"	2 3/4"	3' 9"
8'	4"	18"	4' 0"	3 7/8"	2 3/4"	6' 1"
10'	4"	18"	5' 0"	3 7/8"	2 3/4"	8' 4"
12'	4 1/2"	24"	6' 5"	4 3/8"	2 3/4"	10' 4"
14'	4 1/2"	24"	7' 6"	4 3/8"	2 3/4"	12' 8"
16'	4 1/2"	24"	8' 9"	4 3/8"	2 3/4"	15' 0"

(1) RADIUS TO INSIDE SURFACE
(2) TOP END 3 7/8"A/F FOR 6, 8 & 10 FT. LUM. ARMS
TOP END 4 3/8"A/F FOR 12, 14 & 16 FT. LUM. ARMS
(3) AFB – "ACROSS THE FLATS" AT THE BASE OF THE SHAFT
(4) AFT – "ACROSS THE FLATS" AT THE TOP OF THE SHAFT

Ⓐ MAIN SHAFT (2) 12 SIDED SECTION		
MOUNTING HEIGHT	AFB(3)	THK.
25'	7 1/2"	10GA
30'	8"	10GA
35'	8 1/2"	10GA
40'	9 1/2"	10GA
45'	10 1/4"	7GA
50'	11"	7GA

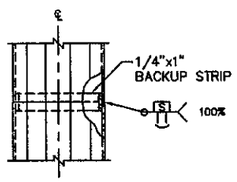

DETAIL 'X'

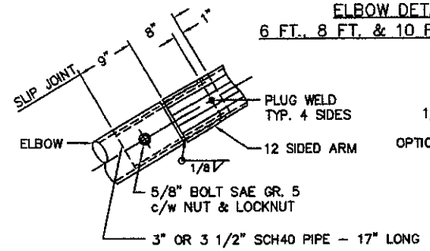

DETAIL 'Z'

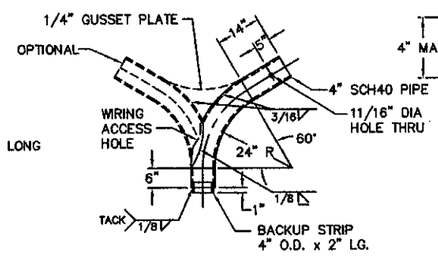

ELBOW DETAIL FOR 12 FT. 14 FT & 16 FT ARM REACH

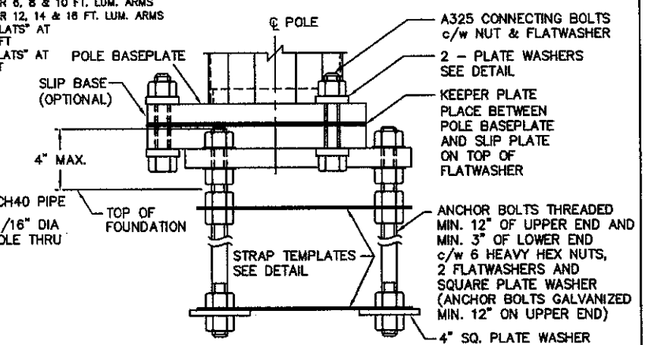

SLIP BASE ASSEMBLY

MOUNTING HEIGHT (FT.)	CONNECTING BOLT		ANCHOR BOLT			
					PLATE WASHER	
	DIA (IN.)	LENGTH (IN.)	DIA (IN.)	LENGTH (IN.)	SIZE (IN. SQ.)	THICKNESS (IN.)
25 TO 40	1	4 3/4	1	54	4	3/8
45 TO 50	1 1/8	5	1 1/8	66	4	3/8

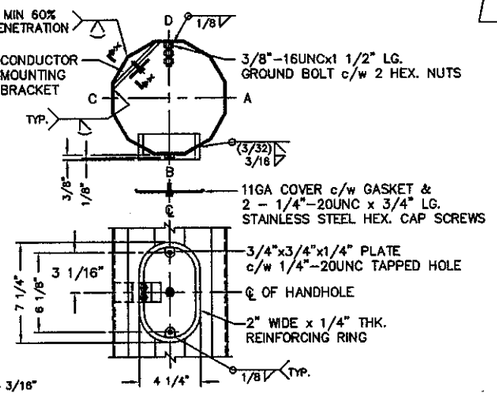

VIEW OF HANDHOLE SHOWING

1. POSITION OF GROUND BOLT.
2. POSITION OF REINFORCING RING.
3. LONGITUDINAL SHAFT WELD.
4. CONDUCTOR MTG. BRACKET

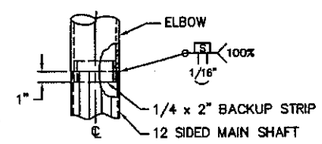

DETAIL 'Y'

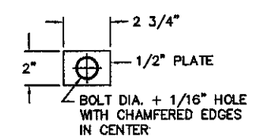

PLATE WASHER DETAIL

IDENTIFICATION TAG

MAT'L – 14 GAUGE ALUMINUM SECURE TO POLE WITH TWO (2) 0.125" SS OR ALUMINUM RIVETS LETTERS TO BE STAMPED OR ENGRAVED MINIMUM LETTER HEIGHT = 3/16"

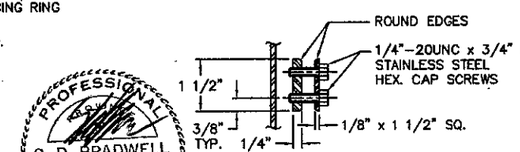

SECTION X–X

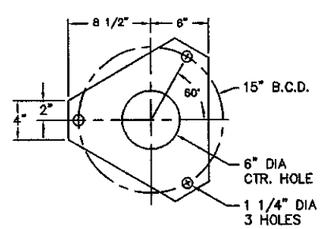

KEEPER PLATE DETAIL
GALVANIZED 28GA SHEET

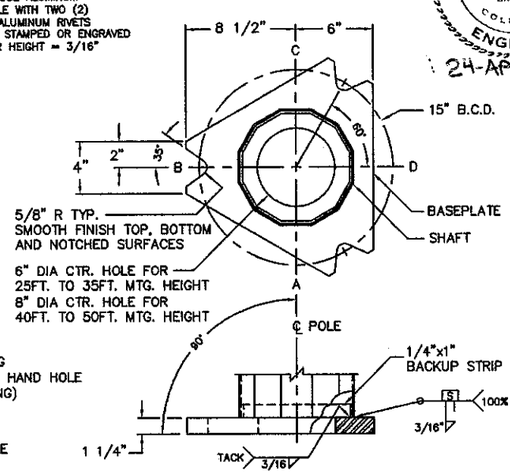

POLE BASEPLATE ATTACHMENT DETAIL

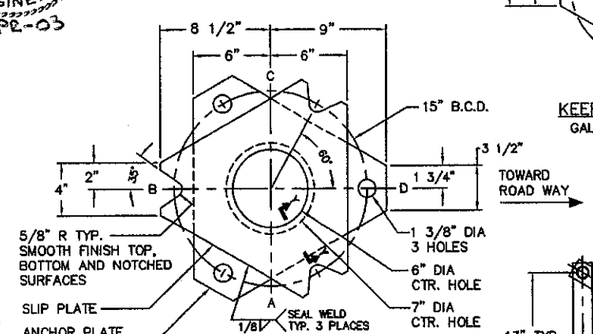

SLIP BASE DETAIL

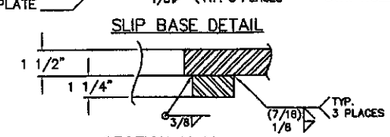

SECTION Y–Y

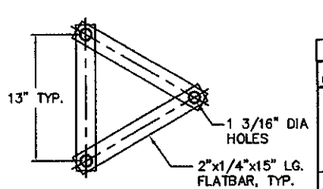

STRAP TEMPLATE DETAIL
PLACE OVER ANCHOR BOLTS

DESIGN: ALL STANDARDS ARE DESIGNED TO THE 2001 AASHTO STANDARD SPECIFICATIONS FOR STRUCTURAL SUPPORTS FOR HIGHWAY SIGNS, LUMINAIRES AND TRAFFIC SIGNALS.
DESIGN WIND SPEED – 90 MPH (3 SECOND GUST WIND SPEED)
DESIGN LIFE / RECURRENCE INTERVAL – 25 YEAR
EACH STRUCTURE CAN ACCOMODATE A MAXIMUM OF 2 LUMINAIRES
THE DESIGN AREA OF THE LUMINAIRES IS AS FOLLOWS:

LUMINAIRE DATA
FACE AREA = 3.3 FT.^{2}
WIND DRAG COEFFICIENT = 0.5
WEIGHT = 60 LB.
ICE AREA = 8.7 FT.^{2}

INSTALLATION OF A 50 FT. POLE WITH DOUBLE LUMINAIRE ARMS ON A SLIP BASE IS NOT ALLOWED.

WELDING: WELDING OF STRUCTURES SHALL BE IN ACCORDANCE WITH THE CURRENT AASHTO SPECIFICATIONS FOR STRUCTURAL SUPPORTS OF HIGHWAY SIGNS, LUMINAIRES & TRAFFIC SIGNALS.
LONGITUDINAL SEAM WELD IS 60% MINIMUM PENETRATION EXCEPT:
– 6 INCHES FROM END OF SECTIONS IT IS 100% PENETRATION.
– ON THE FEMALE SECTION OF TELESCOPIC FIELD SPLICES IT IS 100% PENETRATION FOR MINIMUM SPLICE LENGTH PLUS 6 INCHES

FINISH: ALL COMPONENTS TO BE HOT DIP GALVANIZED AS PER ASTM A123 / A153

MATERIAL DATA (UNLESS OTHERWISE NOTED)	
COMPONENT	GRADE
ALL TAPERED TUBES	ASTM A572 Gr. 50
BASE PLATE	ASTM A572 Gr. 50
SLIP BASE PLATES	ASTM A36
PIPE TENONS & ELBOW	ASTM A53 Gr. B SCH40
ANCHOR BOLTS	ASTM A449
SLIP FIT BOLT	ASTM A325 – Type 1
NUTS	ASTM A563-DH
FLAT WASHERS	ASTM F436

No. REQ'D.	W.O. No.	FILE No.	DATE	P.O. No.	CUSTOMER	LOCATION

APS Inc.
American Pole Structures Inc.

TITLE
STATE OF WASHINGTON
ELBOW TYPE ST. LIGHT POLES

REV.No.	CHANGE	BY	APP.	DATE

DRAWN BY	L.B.	APP. BY	S.B.	DWG. No.	REV. No.	SHT. 1 of 1 SHTS.
DATE	APRIL 10, 03	SCALE	N.T.S.	WS-SL-02	0	