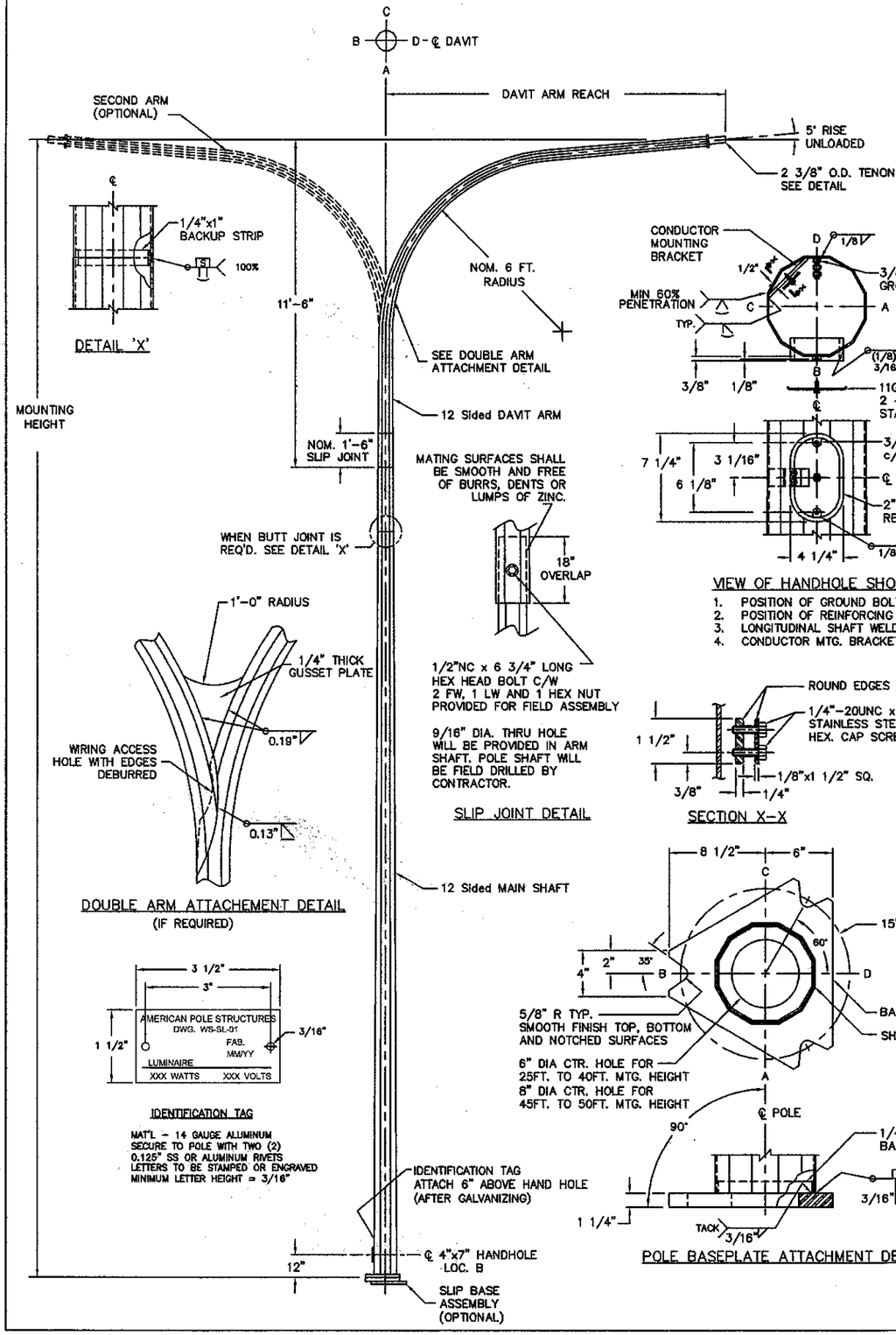

IDENTIFICATION TAG

MAT'L – 14 GAUGE ALUMINUM SECURE TO POLE WITH TWO (2) 0.125" SS OR ALUMINUM RIVETS LETTERS TO BE STAMPED OR ENGRAVED MINIMUM LETTER HEIGHT = 3/16"

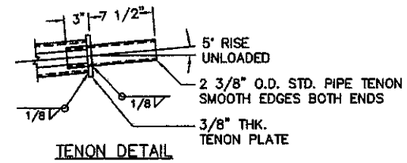

TENON DETAIL

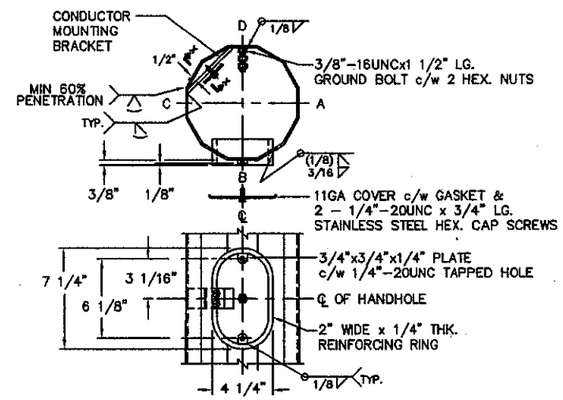

VIEW OF HANDHOLE SHOWING

1. POSITION OF GROUND BOLT.
2. POSITION OF REINFORCING RING.
3. LONGITUDINAL SHAFT WELD.
4. CONDUCTOR MTG. BRACKET

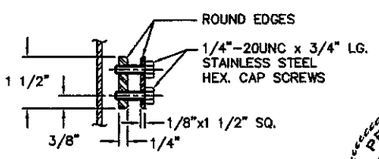

SECTION X-X

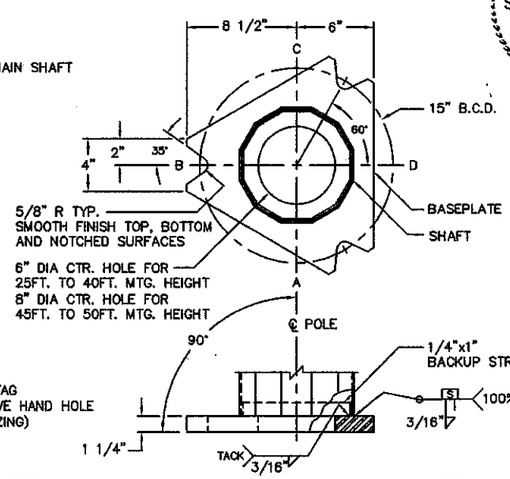

POLE BASEPLATE ATTACHMENT DETAIL

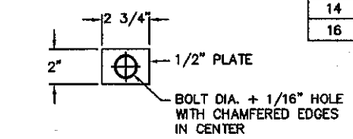

PLATE WASHER DETAIL

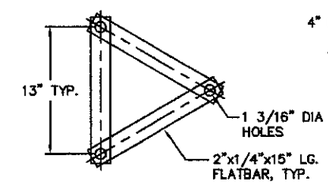

STRAP TEMPLATE DETAIL

PLACE OVER ANCHOR BOLTS

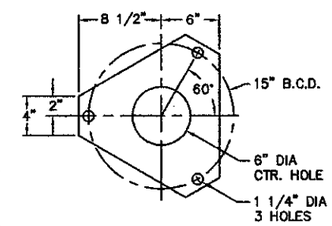

KEEPER PLATE DETAIL

GALVANIZED 28GA SHEET

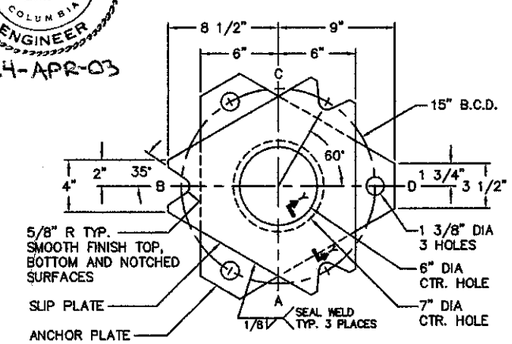

SLIP BASE DETAIL

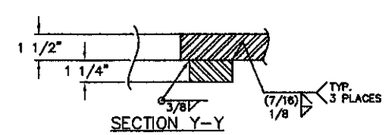

SECTION Y-Y

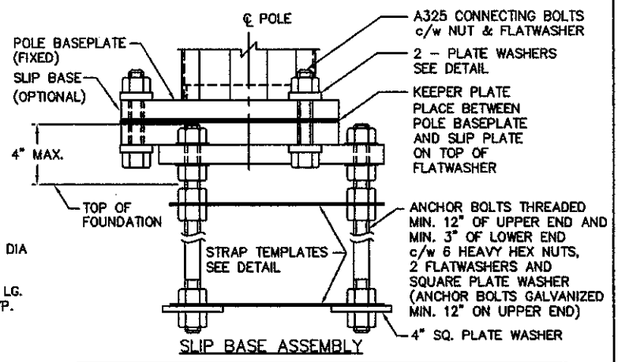

SLIP BASE ASSEMBLY

DAVIT ARM				
ARM REACH (FT.)	BASE A/F (IN.)	END A/F (IN.)	LENGTH (FT.)	THK.
6	6	4 1/16	14' 8"	10GA
8	6	3 13/16	16' 6"	10GA
10	6	3 9/16	18' 4"	10GA
12	6	3 5/16	20' 2"	10GA
14	6	3 1/16	22' 0"	10GA
16	6	2 13/16	23' 10"	10GA

MAIN SHAFT				
MOUNTING HEIGHT (FT.)	BASE A/F (IN.)	END A/F (IN.)	LENGTH (FT.)	THK.
25	7 1/2	5 1/2	15.00	10GA
30	8 1/4	5 1/2	20.00	10GA
35	8 7/8	5 1/2	25.00	10GA
40	9 5/8	5 1/2	30.00	10GA
45	10 5/16	5 1/2	35.00	7GA
50	11	5 1/2	40.00	7GA

10GA (0.1345 IN)
7GA (0.1793 IN)

MOUNTING HEIGHT (FT.)	CONNECTING BOLT		ANCHOR BOLT			
					PLATE WASHER	
	DIA (IN.)	LENGTH (IN.)	DIA (IN.)	LENGTH (IN.)	SIZE (IN. SQ.)	THICKNESS (IN.)
25 TO 40	1	4 3/4	1	54	4	3/8
45 TO 50	1 1/8	5	1 1/8	66	4	3/8

DESIGN: ALL STANDARDS ARE DESIGNED TO THE 2001 AASHTO STANDARD SPECIFICATIONS FOR STRUCTURAL SUPPORTS FOR HIGHWAY SIGNS, LUMINAIRES AND TRAFFIC SIGNALS.
DESIGN WIND SPEED – 90 MPH (3 SECOND GUST WIND SPEED)
DESIGN LIFE / RECURRENCE INTERVAL – 25 YEAR
EACH STRUCTURE CAN ACCOMODATE A MAXIMUM OF 2 LUMINAIRES
THE DESIGN AREA OF THE LUMINAIRES IS AS FOLLOWS:
LUMINAIRE DATA
FACE AREA = 3.3 FT.^{2}
WIND DRAG COEFFICIENT = 0.5
WEIGHT = 60 LB.
ICE AREA = 8.7 FT.^{2}
INSTALLATION OF A 50 FT. POLE WITH DOUBLE LUMINAIRE ARMS ON A SLIP BASE IS NOT ALLOWED.

WELDING: WELDING OF STRUCTURES SHALL BE IN ACCORDANCE WITH THE CURRENT AASHTO SPECIFICATIONS FOR STRUCTURAL SUPPORTS OF HIGHWAY SIGNS, LUMINAIRES & TRAFFIC SIGNALS.
LONGITUDINAL SEAM WELD IS 60% MINIMUM PENETRATION EXCEPT:
– 6 INCHES FROM END OF SECTIONS IT IS 100% PENETRATION.
– ON THE FEMALE SECTION OF TELESCOPIC FIELD SPLICES IT IS 100% PENETRATION FOR MINIMUM SPLICE LENGTH PLUS 6 INCHES

FINISH: ALL COMPONENTS TO BE HOT DIP GALVANIZED AS PER ASTM A123 / A153

MATERIAL DATA (UNLESS OTHERWISE NOTED)	
COMPONENT	GRADE
ALL TAPERED TUBES	ASTM A572 Gr. 50
BASE PLATE	ASTM A572 Gr. 50
SLIP BASE PLATES	ASTM A36
PIPE TENONS	ASTM A53 Gr. B
ANCHOR BOLTS	ASTM A449
SLIP FIT BOLT	ASTM A325 – Type 1
NUTS	ASTM A563-DH
FLAT WASHERS	ASTM F436

PROFESSIONAL ENGINEER
S. D. BRADWELL
BRITISH COLUMBIA
24-APR-03

No. REQ'D.	W.O. No.	FILE No.	DATE	P.O. No.	CUSTOMER	LOCATION

APS Inc.
American Pole Structures Inc.

REV.No.	CHANGE	BY	APP.	DATE

TITLE
STATE OF WASHINGTON
DAVIT TYPE ST. LIGHT POLES

DRAWN BY	L.B.	APP. BY	S.B.	DWG. No.	REV. No.	SHT. 1 of 1 SHTS.
DATE	APRIL 10, 03	SCALE	N.T.S.	WS-SL-01	0	