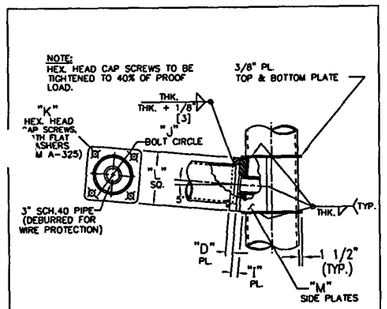

MAST ARM CONNECTION DETAIL

DETAIL "D" (TYPE II SERIES POLE)

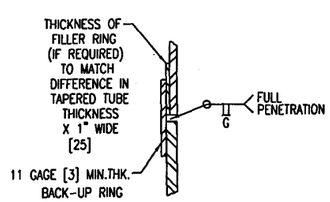

DETAIL "E" SPLICE DETAIL

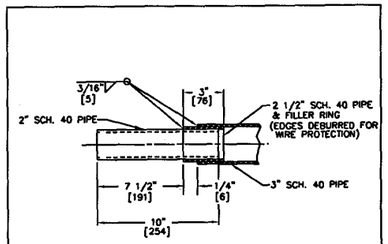

END OF ARM TENON DETAIL

DETAIL "F" (TYPE "J" & "T")

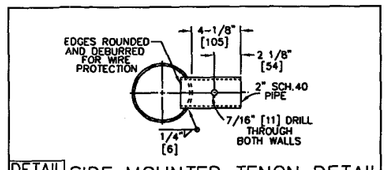

DETAIL "G1" SIDE MOUNTED TENON DETAIL

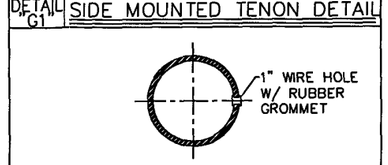

DETAIL "G2" SIGNAL ATTACHMENT DETAIL (USED WHEN TYPE "N" MOUNT IS SPECIFIED)

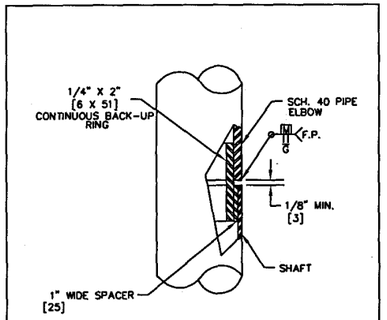

DETAIL "H" ELBOW CONNECTION

MATERIAL SPECIFICATION	
SHAFT	STEEL OF 48,000 P.S.I. [330,948 kPa] MINIMUM YIELD AFTER FABRICATION
BASE PL., FLANGES	ASTM A-36 STEEL
PIPE	ASTM A-53 GRADE "B"
ANCHOR BOLTS	ASTM A-449
POLE FINISH	HOT DIP GALVANIZED PER ASTM A-123
HARDWARE FINISH	HOT DIP GALVANIZED PER ASTM A-153
WELDS LONGITUDINAL	BUTT WELD BY THE ELECTRICAL RESISTANCE PROCESS
WELDS CIRCUMFERENTIAL	BUTT WELD WITH PERMANENT BACK-UP RING (CONTINOUS)

NOTES

WELD: ALL BUTT WELDS TO GROUND FLUSH WITH BASE METAL.

WELDING OF STRUCTURES SHALL BE IN ACCORDANCE WITH THE LATEST EDITION OF THE AWS STRUCTURAL WELDING CODE D1.1 – STEEL

TOLERANCES:

TOLERANCES SHALL BE IN ACCORDANCE WITH SECTIONS 5.14.1 THROUGH 5.14.3 OF THE "SPECIFICATION FOR STRUCTURAL SUPPORTS OF HIGHWAY SIGNS, LUMINAIRES AND TRAFFIC SIGNALS" AASHTO 2001.

THE PERMISSIBLE VARIATION FOR STRAIGHTNESS OF THE TAPERED SECTIONS SHALL BE (.025 X SHAFT LENGTH) [.6]

EXAMPLE:
A POLE WITH A SHAFT LENGTH OF 30' [9.1] SHALL NOT VARY MORE THAN 3/4"--(.025 X 30) =.75 . [19] [19]

THE MOUNTING HEIGHTS WHICH ARE LISTED ON DRAWING(S) SHALL HAVE A PERMISSIBLE TOLERANCE OF ±6" [152].

(1) CALCULATE CUBICS BASED UPON EXAMPLE BELOW AND COMPARE RESULTS WITH THOSE LISTED IN SIGNAL ARM DATA TABLE.
EXAMPLE:
8.7 SQ.FT. X 25' = 217.5 CUBICS [6.2m³]
6.0 SQ.FT. X 22' = 132.0 CUBICS [3.7m³]
8.7 SQ.FT. X 13' = 113.1 CUBICS [3.2m³]
TOTAL = 462.6 CUBICS [13.1m³]

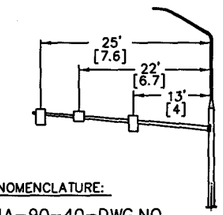

POLE NOMENCLATURE:

TYPE IIA-90-40-DWG.NO.
POLE STYLE / DESIGN WIND LOAD / SIGNAL ARM LENGTH

TYPE IIIA-90-40-3510J-DWG.NO.
POLE STYLE / DESIGN WIND LOAD / SIGNAL ARM LENGTH / LUMINAIRE MTNG. HEIGHT / LUMINAIRE ARM STYLE

(2) IF DESIRED SIGNAL ARM LENGTH IS NOT LISTED IN TABLES, THE NEXT LONGEST SIGNAL ARM SHALL BE USED WITH THE END CUT OFF TO FORM APPROPRIATE LENGTH.

(3) 3" SCH. 40 PIPE FOR LUM. ARMS 10' [3] AND LESS. 3 1/2" SCH. 40 PIPE FOR LUM. ARMS 12' [3.7] AND LARGER.

(4) 3 1/2" SCH. 40 PIPE FOR LUM. ARMS 10' [3] AND LESS. 4" SCH. 40 PIPE FOR LUM. ARMS 12' [3.7] AND LONGER.

(5) DIMENSIONS IN [ ] ARE METRIC. INCHES CONVERTED TO MILLIMETERS AND FEET TO METERS.

(6) 3/4" PL. TO BE WELDED TO POLE TOP, SKIPPING SLOTTED AREA, THEN CONE IS WELD IN PLACE.

(7) WHEN "A1" HEIGHTS EXCEED 18'-6" [5.64] HANDHOLE TO BE LOCATED AT CENTER OF BOX, OPPOSITE THE ARM.

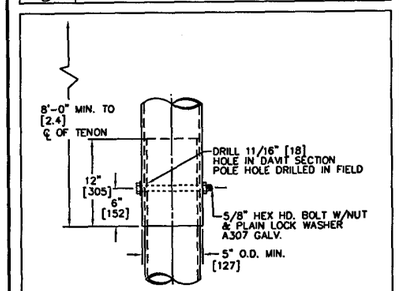

SLIP FIT CONNECTION DETAIL

DETAIL "C" (FOR MOUNTING HEIGHTS GREATER OR EQUAL TO 30'-0")

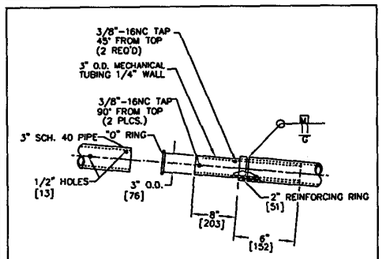

(FOR "J" LUM. WITH MTG. HT. LESS THAN 30'-0" [9.1] AND WITH LUM. ARM LENGTH LONGER THAN 6'-0" [1.8])

LUMINAIRE EXTENSION

DETAIL "J" (TYPE "J")

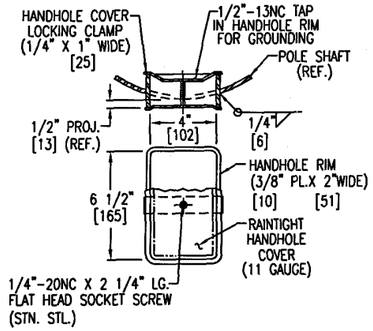

DETAIL "K" HANDHOLE DETAIL

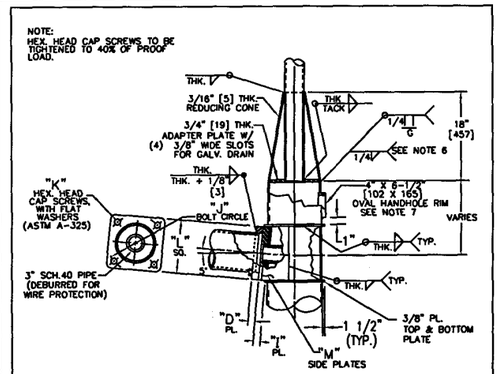

MAST ARM CONNECTION DETAIL

DETAIL "L" (TYPE III SERIES POLE)

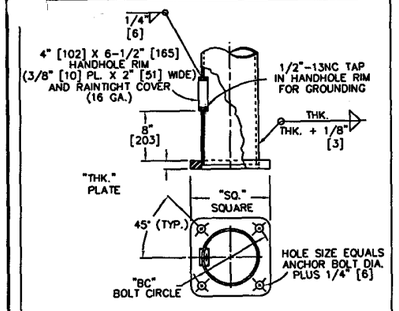

BASE DETAIL

DETAIL "B"

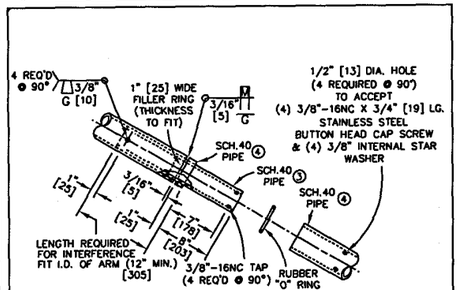

ARM CONNECTION

DETAIL "T" (TYPE "T")

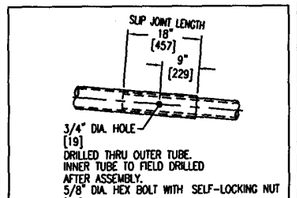

TELESCOPIC SPLICE DETAIL

DETAIL "M"

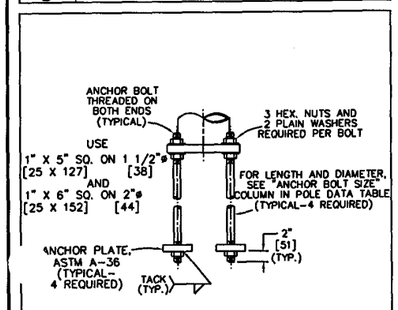

ANCHOR BOLT

DETAIL "A"

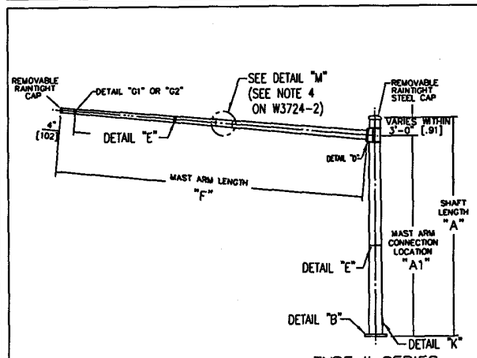

TYPE II SERIES

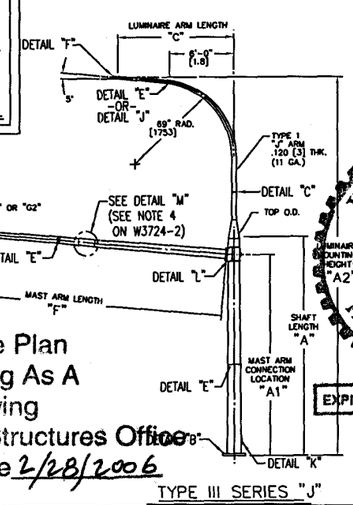

TYPE III SERIES "J"

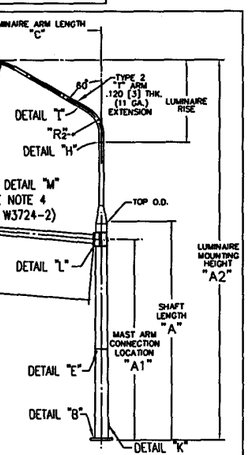

TYPE III SERIES "T"

JEFF L. GRIFFIN
STATE OF WASHINGTON
33467
REGISTERED
PROFESSIONAL ENGINEER
EXPIRES 7/22/03

APPROVED
Manufacturer's Pole Plan
Approved For Listing As A
Pre-Approved Drawing
WSDOT Bridge & Structures Office
By GB Date 2/28/2006

REV	DATE	DESCRIPTION	BY	APPR
E	02/06	REV. HANDHOLE DETAIL	JB	GM
D	10/04	ADDED RING DIM. TO DTL. "D"	MHM	JB
C	9/04	CHANGE TO RING BOX	MHM	JB
B	3/04	HH RIM DETAIL	MHM	RD
A	11/02	ANCHOR BOLT DETAIL	MHM	RD

AGENCY	WSDOT
PROJECT	
DISTRIBUTOR	
CONTRACTOR	
CUSTOMER ORDER NO.	
AMERON NO.	

Ameron POLE PRODUCTS DIVISION

STATE OF WASHINGTON
TYPE II AND III SERIES

THIS DOCUMENT CONTAINS INFORMATION WHICH IS PROPRIETARY TO AMERON. IT SHALL NOT BE REPRODUCED, USED OR DISCLOSED TO ANYONE WITHOUT THE PRIOR WRITTEN PERMISSION OF AMERON.

DRAWN: MHM	DATE: 6/02	SCALE: N.T.S.	DWG.NO.	REV.
APPR: JB	DATE: 6/02	SHT 1 OF 2	W3724-1	E