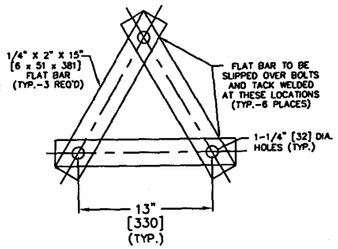


DETAIL "D" STRAP TEMPLATE ASSEMBLY DETAIL (SUPPLY (2) PER POLE)

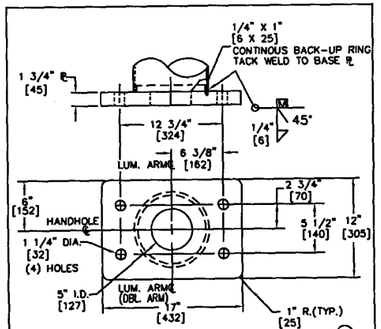


DETAIL "E" MEDIAN BARRIER BASE ⑤

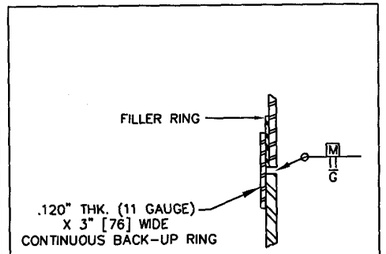


DETAIL "F" SPLICE DETAIL

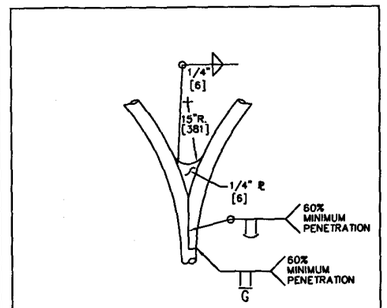


DETAIL "G" DOUBLE ARM JOINT DETAIL

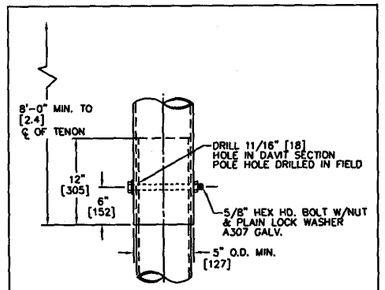


DETAIL "H" SLIP FIT CONNECTION DETAIL

| MATERIAL SPECIFICATION | |
|---|---|
| SHAFT | STEEL OF 48,000 P.S.I. MINIMUM YIELD AFTER FABRICATION |
| BOTTOM SLIP PLATE | ASTM A-36 STEEL |
| ANCHOR PLATE | ASTM A-36 STEEL |
| PIPE | ASTM A-53 GRADE "B" |
| ANCHOR BOLTS | ASTM A-449 |
| POLE FINISH | HOT DIP GALVANIZED PER ASTM A-123 |
| HARDWARE FINISH | HOT DIP GALVANIZED PER ASTM A-153 |
| WELDS LONGITUDINAL | BUTT WELD BY THE ELECTRICAL RESISTANCE PROCESS |
| WELDS CIRCUMFERENTIAL | BUTT WELD WITH PERMANENT BACK-UP RING (CONTINOUS) |
| TOP SLIP PLATE | ASTM A-572 GR50 |
| MEDIAN BARRIER PLATE | ASTM A-36 STEEL |

## NOTES

① WELD: ALL BUTT WELDS TO BE GROUND FLUSH WITH BASE METAL. WELDING OF STRUCTURES SHALL BE IN ACCORDANCE WITH THE CURRENT AASHTO "SPECIFICATIONS FOR STRUCTURAL SUPPORTS OF HIGHWAY SIGNS, LUMINAIRES AND TRAFFIC SIGNALS".

ORDERING INFO — SERIES — LUMINAIRE ARM LENGTH — DWG. NO.

J-4010D-SB-3721

LUMINAIRE MOUNTING HEIGHT

D = DOUBLE ARM

SB = SLIP BASE
FB = FIXED BASE
BM = BRIDGE MOUNT
MB = MEDIAN BARRIER

② FOR DOUBLE ARM POLE,INSERT THE LETTER "D" AFTER THE ARM LENGTH IN THE CATALOG NUMBER. EXAMPLE: J-4012D-DWG. NO.

③ ALL WIREWAYS SHALL BE DEBURRED,ROUNDED AND SMOOTH FOR WIRE PROTECTION PURPOSES.

④ THE TOP SLIP PLATE WITHOUT THE BOTTOM SLIP PLATE AND ANCHOR PLATE IS A FIXED BASE. WHEN A FIXED BASE IS REQUIRED BY THE CONTRACT PLANS, ROTATE THE ANCHOR BOLT PATTERN SHOWN ON STANDARD PLAN "J-1B" AND INSTALL THE TOP SLIP PLATE DIRECTLY UPON THE FOUNDATION.

⑤ THE MEDIAN BARRIER BASE SHALL BE USED ON 40', 45' AND 50' LIGHTING STANDARDS WITH 12' MAXIMUM LENGTH DOUBLE ARMS.

⑥ POLES WITH DOUBLE ARMS ARE TO HAVE A 7 GA. THICKNESS ALL DAVIT SECTIONS ARE TO BE 11 GA.

⑦ FOR POLES REQUIRING DIFFERENT POLE LENGTHS THAN SHOWN POLE DIAMETER SHALL BE ADJUSTED BY USING THE SAME POLE TAPER (0.14"/FT.)

⑧ THE BOTTOM SLIP PLATE WILL INCREASE TO 1-1/2" THICKNESS WHEN DOUBLE 10'-0" & GREATER MAST ARMS ARE USED ON A 50' POLE.

⑨ FOR 20' OR LESS MTG. HT., USE 5" I.D. FOR TOP SLIP PLATE.

⑩ SUPPORTS COMPLY WITH AASHTO SPECIFICATION FOR STRUCTURAL SUPPORTS FOR HIGHWAY SIGNS, LUMINAIRES AND TRAFFIC SIGNALS. 4TH ED.2001 W/90 MPH WIND

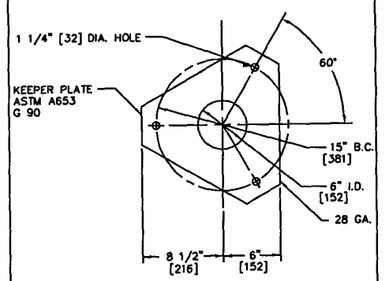


DETAIL "C" KEEPER PLATE

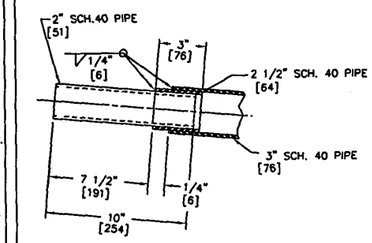


DETAIL "J" END OF ARM TENON DETAIL

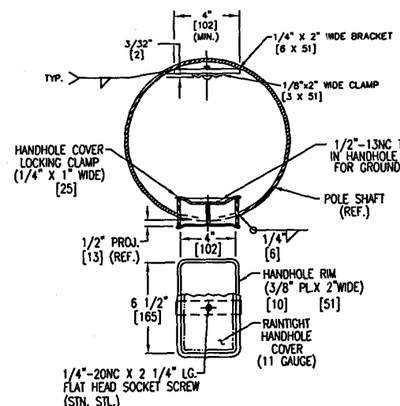


DETAIL "K" HANDHOLE DETAIL

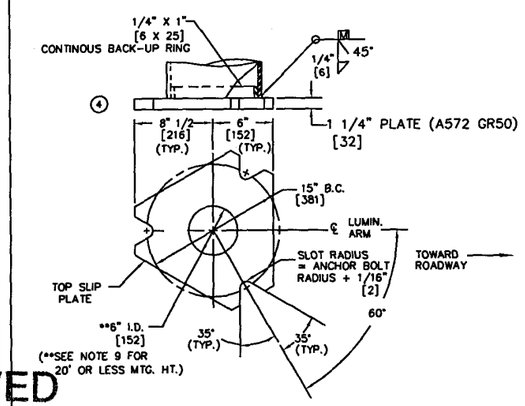


DETAIL "L" TOP SLIP PLATE

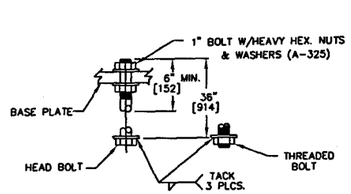


ANCHOR BOLT DETAIL FOR MEDIAN BARRIER BASE

DETAIL "B"

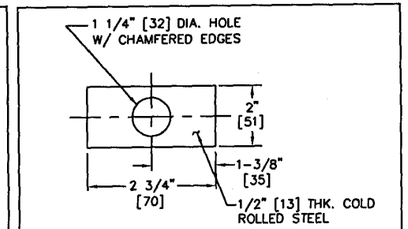


DETAIL "N" PLATE WASHER

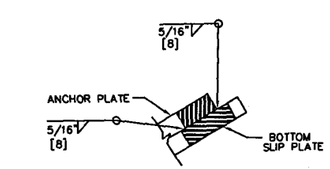


SECTION A-A

DETAIL "A"

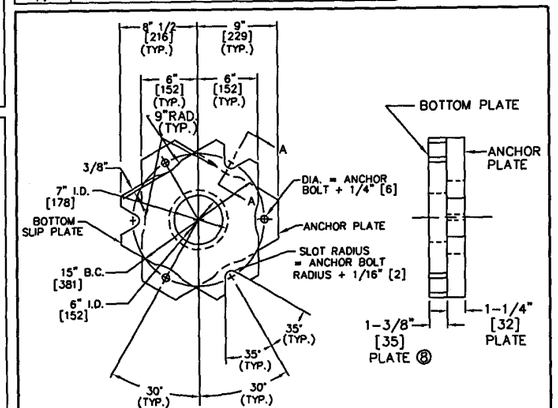


DETAIL "L" BOTTOM SLIP PLATE & ANCHOR PLATE

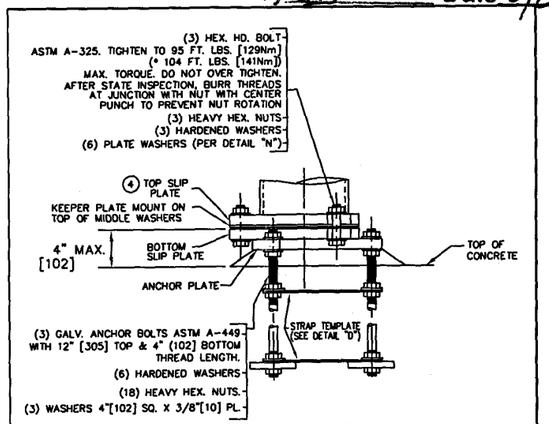


SLIP BASE ASSEMBLY

* MOUNTING HEIGHT OF 50' [15.3] WITH DOUBLE ARMS LONGER THAN 8' [2.5]

DETAIL "M"

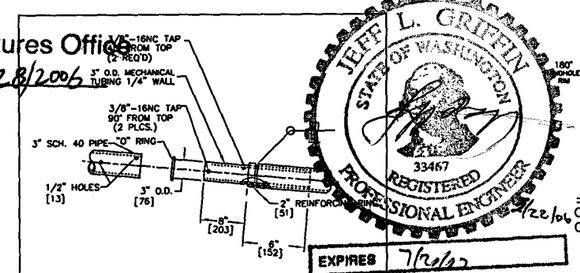


(FOR DOUBLE "J" LUMINAIRE ARMS WITH LUMINAIRE ARM LENGTHS LONGER THAN 6'-0" [1.8])

DETAIL "P" LUMINAIRE EXTENSION

JEFF L. GRIFFIN
STATE OF WASHINGTON
33467
REGISTERED PROFESSIONAL ENGINEER
EXPIRES 7/20/07
5/22/06

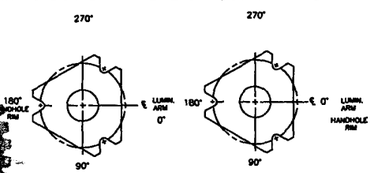


STANDARD — BRIDGE MOUNTED POLES

HANDHOLE ORIENTATION

CONTRACTOR MUST VERIFY HANDHOLE ORIENTATION OF "BRIDGE MOUNT" POLES BEFORE FABRICATION.

APPROVED
Manufacturer's Pole Plan
Approved For Listing As A
Pre-Approved Drawing
WSDOT Bridge & Structures Office
By GB Date 2/28/2006

| REV | DATE | DESCRIPTION | BY | APPR |
|---|---|---|---|---|
| E | 02/06 | REV. HANDHOLE DETAIL | JB | GM |
| D | 4/04 | REVISE DETAIL "C" | MHM | JB |
| C | 3/04 | REV. NOTE DETAIL "M" | RD | JB |
| B | 9/03 | REV. MEDIAN BASE ORIENT. | JB | GM |
| A | 03/03 | ADDED NOTE 10 | JC | RD |

| | |
|---|---|
| AGENCY | |
| PROJECT | |
| DISTRIBUTOR | |
| CONTRACTOR | |
| CUSTOMER ORDER NO. | |
| AMERON NO. | |

Ameron POLE PRODUCTS DIVISION

STATE OF WASHINGTON
"J" SERIES LIGHTING STANDARD

THIS DOCUMENT CONTAINS INFORMATION WHICH IS PROPRIETARY TO AMERON. IT SHALL NOT BE REPRODUCED, USED OR DISCLOSED TO ANYONE WITHOUT THE PRIOR WRITTEN PERMISSION OF AMERON.

| DRAWN: MHM | DATE: 02/03 | SCALE | DWG.NO. | REV. |
|---|---|---|---|---|
| APPR: RD | DATE: 02/03 | | W3721-1 | E |