ITEM	QTY.	CATALOG NUMBER ②	"H1"	LUMINAIRE ARM SIZE "C"	LUMINAIRE ARM SIZE END O.D. X BASE O.D. X THICKNESS	.120" THK.	.179" THK.	.239" THK.	.239" THK.	.3125" THK.	RISE	"D"	RADIUS "E"	POLE SIZE ④⑤⑦ "F" ⑥	POLE SIZE ④⑤⑦ TOP O.D X BASE O.D.	.120" THK.	.179" THK.	.239" THK.	.239" THK.	.3125" THK.	SINGLE ARM ANCHOR BOLT SIZE "G"	SINGLE ARM HEX. HEAD BOLT SIZE "W"	DOUBLE ARM ANCHOR BOLT SIZE "G"	DOUBLE ARM HEX. HEAD BOLT SIZE "W"
				— — POLE DATA — —																				
		T-306-3720		6'-0" [1.8]	2 3/8" X 4" [60 X 102]	6'-0" [1.8]	—	—	—	—	3'-0" [.91]	10" [254]	12" [305]	27'-0" [8.2]	4" X 7 11/16" [102 X 195]	27'-0" [8.2]	—	—	—	—	1" X 54" [25 X 1372]	1"-8NC X 5 1/2"	1" X 54" [25 X 1372]	1"-8NC X 5 1/2"
		T-308-3720		8'-0" [2.4]	2 3/8" X 4" [60 X 102]	8'-0" [2.4]	—	—	—	—	4'-0" [1.2]	10" [254]	12" [305]	26'-0" [7.9]	4" X 7 9/16" [102 X 192]	26'-0" [7.9]	—	—	—	—	1" X 54" [25 X 1372]	1"-8NC X 5 1/2"	1" X 54" [25 X 1372]	1"-8NC X 5 1/2"
		T-3010-3720	30' [9.14]	10'-0" [3.1]	2 3/8" X 4" [60 X 102]	10'-0" [3.1]	—	—	—	—	5'-0" [1.5]	10" [254]	12" [305]	25'-0" [7.6]	4" X 7 7/16" [102 X 189]	25'-0" [7.6]	—	—	—	—	1" X 54" [25 X 1372]	1"-8NC X 5 1/2"	1" X 54" [25 X 1372]	1"-8NC X 5 1/2"
		T-3012-3720	NOM. ± 6"	12'-0" [3.7]	2 3/8" X 4 1/2" [60 X 114]	12'-0" [3.7]	—	—	—	—	6'-6" [2.0]	12" [305]	15" [381]	23'-6" [7.16]	4 1/2" X 7 3/4" [114 X 197]	23'-6" [7.16]	—	—	—	—	1" X 54" [25 X 1372]	1"-8NC X 5 1/2"	1" X 54" [25 X 1372]	1"-8NC X 5 1/2"
		T-3014-3720	[±152]	14'-0" [4.3]	2 3/8" X 4 1/2" [60 X 114]	14'-0" [4.3]	—	—	—	—	7'-6" [2.3]	12" [305]	15" [381]	22'-6" [6.9]	4 1/2" X 7 9/16" [114 X 192]	22'-6" [6.9]	—	—	—	—	1" X 54" [25 X 1372]	1"-8NC X 5 1/2"	1" X 54" [25 X 1372]	1"-8NC X 5 1/2"
		T-3016-3720		16'-0" [4.9]	2 3/8" X 4 1/2" [60 X 114]	16'-0" [4.9]	—	—	—	—	8'-1" [2.5]	12" [305]	15" [381]	22'-0" [6.7]	4 1/2" X 7 1/2" [114 X 191] ③	22'-0" [6.7]	—	—	—	—	1" X 54" [25 X 1372]	1"-8NC X 5 1/2"	1" X 54" [25 X 1372]	1"-8NC X 5 1/2"
		T-356-3720		6'-0" [1.8]	2 3/8" X 4" [60 X 102]	6'-0" [1.8]	—	—	—	—	3'-0" [.91]	10" [254]	12" [305]	32'-0" [9.8]	4" X 8 3/8" [102 X 213]	32'-0" [9.8]	—	—	—	—	1" X 54" [25 X 1372]	1"-8NC X 5 1/2"	1" X 54" [25 X 1372]	1"-8NC X 5 1/2"
		T-358-3720		8'-0" [2.4]	2 3/8" X 4" [60 X 102]	8'-0" [2.4]	—	—	—	—	4'-0" [1.2]	10" [254]	12" [305]	31'-0" [9.4]	4" X 8 1/4" [102 X 210]	31'-0" [9.4]	—	—	—	—	1" X 54" [25 X 1372]	1"-8NC X 5 1/2"	1" X 54" [25 X 1372]	1"-8NC X 5 1/2"
		T-3510-3720	35' [10.7]	10'-0" [3.1]	2 3/8" X 4" [60 X 102]	10'-0" [3.1]	—	—	—	—	5'-0" [1.5]	10" [254]	12" [305]	30'-0" [9.14]	4" X 8 1/8" [102 X 206]	30'-0" [9.14]	—	—	—	—	1" X 54" [25 X 1372]	1"-8NC X 5 1/2"	1" X 54" [25 X 1372]	1"-8NC X 5 1/2"
		T-3512-3720	NOM. ± 6"	12'-0" [3.7]	2 3/8" X 4 1/2" [60 X 114]	12'-0" [3.7]	—	—	—	—	6'-6" [2.0]	12" [305]	15" [381]	28'-6" [8.7]	4 1/2" X 8 3/8" [114 X 213]	28'-6" [8.7]	—	—	—	—	1" X 54" [25 X 1372]	1"-8NC X 5 1/2"	1" X 54" [25 X 1372]	1"-8NC X 5 1/2"
		T-3514-3720	[±152]	14'-0" [4.3]	2 3/8" X 4 1/2" [60 X 114]	14'-0" [4.3]	—	—	—	—	7'-6" [2.3]	12" [305]	15" [381]	27'-6" [8.4]	4 1/2" X 8 1/4" [114 X 210]	27'-6" [8.4]	—	—	—	—	1" X 54" [25 X 1372]	1"-8NC X 5 1/2"	1" X 54" [25 X 1372]	1"-8NC X 5 1/2"
		T-3516-3720		16'-0" [4.9]	2 3/8" X 4 1/2" [60 X 114]	16'-0" [4.9]	—	—	—	—	8'-1" [2.5]	12" [305]	15" [381]	27'-0" [8.2]	4 1/2" X 8 3/16" [114 X 208] ③	27'-0" [8.2]	—	—	—	—	1" X 54" [25 X 1372]	1"-8NC X 5 1/2"	1" X 54" [25 X 1372]	1"-8NC X 5 1/2"
		T-406-3720		6'-0" [1.8]	2 3/8" X 4" [60 X 102]	6'-0" [1.8]	—	—	—	—	3'-0" [.91]	10" [254]	12" [305]	37'-0" [11.3]	4" X 9 1/16" [102 X 230]	37'-0" [11.3]	—	—	—	—	1" X 54" [25 X 1372]	1"-8NC X 5 1/2"	1" X 54" [25 X 1372]	1"-8NC X 5 1/2"
		T-408-3720	40'	8'-0" [2.4]	2 3/8" X 4" [60 X 102]	8'-0" [2.4]	—	—	—	—	4'-0" [1.2]	10" [254]	12" [305]	36'-0" [11.0]	4" X 8 15/16" [102 X 227]	36'-0" [11.0]	—	—	—	—	1" X 54" [25 X 1372]	1"-8NC X 5 1/2"	1" X 54" [25 X 1372]	1"-8NC X 5 1/2"
		T-4010-3720	[12.2] NOM.	10'-0" [3.1]	2 3/8" X 4" [60 X 102]	10'-0" [3.1]	—	—	—	—	5'-0" [1.5]	10" [254]	12" [305]	35'-0" [10.7]	4" X 8 13/16" [102 X 224] ③	35'-0" [10.7]	—	—	—	—	1" X 54" [25 X 1372]	1"-8NC X 5 1/2"	1" X 54" [25 X 1372]	1"-8NC X 5 1/2"
		T-4012-3720	± 6" [+152]	12'-0" [3.7]	2 3/8" X 4 1/2" [60 X 114]	12'-0" [3.7]	—	—	—	—	6'-6" [2.0]	12" [305]	15" [381]	33'-6" [10.2]	4 1/2" X 9 1/8" [114 X 232] ③	33'-6" [10.2]	—	—	—	—	1" X 54" [25 X 1372]	1"-8NC X 5 1/2"	1" X 54" [25 X 1372]	1"-8NC X 5 1/2"
		T-4014-3720		14'-0" [4.3]	2 3/8" X 4 1/2" [60 X 114]	14'-0" [4.3]	—	—	—	—	7'-6" [2.3]	12" [305]	15" [381]	32'-6" [9.91]	4 1/2" X 9" [114 X 229] ③	32'-6" [9.91]	—	—	—	—	1" X 54" [25 X 1372]	1"-8NC X 5 1/2"	1" X 54" [25 X 1372]	1"-8NC X 5 1/2"
		T-4016-3720		16'-0" [4.9]	2 3/8" X 4 1/2" [60 X 114]	16'-0" [4.9]	—	—	—	—	8'-1" [2.5]	12" [305]	15" [381]	32'-0" [10.2]	4 1/2" X 8 7/8" [114 X 225] ③	32'-0" [10.2]	—	—	—	—	1" X 54" [25 X 1372]	1"-8NC X 5 1/2"	1" X 54" [25 X 1372]	1"-8NC X 5 1/2"
		T-456-3720		6'-0" [1.8]	2 3/8" X 4" [60 X 102]	6'-0" [1.8]	—	—	—	—	3'-0" [.91]	10" [254]	12" [305]	42'-0" [12.8]	4" X 9 3/4" [102 X 248]	42'-0" [12.8]	—	—	—	—	1" X 54" [25 X 1372]	1"-8NC X 5 1/2"	1" X 54" [25 X 1372]	1"-8NC X 5 1/2"
		T-458-3720	45'	8'-0" [2.4]	2 3/8" X 4" [60 X 102]	8'-0" [2.4]	—	—	—	—	4'-0" [1.2]	10" [254]	12" [305]	41'-0" [12.5]	4" X 9 5/8" [102 X 244]	41'-0" [12.5]	—	—	—	—	1" X 54" [25 X 1372]	1"-8NC X 5 1/2"	1" X 54" [25 X 1372]	1"-8NC X 5 1/2"
		T-4510-3720	[13.7] NOM.	10'-0" [3.1]	2 3/8" X 4" [60 X 102]	10'-0" [3.1]	—	—	—	—	5'-0" [1.5]	10" [254]	12" [305]	40'-0" [12.2]	4" X 9 1/2" [102 X 241] ③	40'-0" [12.2]	—	—	—	—	1" X 54" [25 X 1372]	1"-8NC X 5 1/2"	1" X 54" [25 X 1372]	1"-8NC X 5 1/2"
		T-4512-3720	± 6" [+152]	12'-0" [3.7]	2 3/8" X 4 1/2" [60 X 114]	12'-0" [3.7]	—	—	—	—	6'-6" [2.0]	12" [305]	15" [381]	38'-6" [11.7]	4 1/2" X 9 13/16" [114 X 249] ③	38'-6" [11.7]	—	—	—	—	1" X 54" [25 X 1372]	1"-8NC X 5 1/2"	1" X 54" [25 X 1372]	1"-8NC X 5 1/2"
		T-4514-3720		14'-0" [4.3]	2 3/8" X 4 1/2" [60 X 114]	14'-0" [4.3]	—	—	—	—	7'-6" [2.3]	12" [305]	15" [381]	37'-6" [11.4]	4 1/2" X 9 5/8" [114 X 244] ③	37'-6" [11.4]	—	—	—	—	1" X 54" [25 X 1372]	1"-8NC X 5 1/2"	1" X 54" [25 X 1372]	1"-8NC X 5 1/2"
		T-4516-3720		16'-0" [4.9]	2 3/8" X 4 1/2" [60 X 114]	16'-0" [4.9]	—	—	—	—	8'-1" [2.5]	12" [305]	15" [381]	37'-0" [11.3]	4 1/2" X 9 9/16" [114 X 243] ③	37'-0" [11.3]	—	—	—	—	1" X 54" [25 X 1372]	1"-8NC X 5 1/2"	1" X 54" [25 X 1372]	1"-8NC X 5 1/2"
		T-506-3720		6'-0" [1.8]	2 3/8" X 4" [60 X 102]	6'-0" [1.8]	—	—	—	—	3'-0" [.91]	10" [254]	12" [305]	47'-0" [14.3]	4" X 10 7/16" [102 X 265]	47'-0" [14.3]	—	—	—	—	1" X 54" [25 X 1372]	1"-8NC X 5 1/2"	1" X 54" [25 X 1372]	1"-8NC X 5 1/2"
		T-508-3720	50'	8'-0" [2.4]	2 3/8" X 4" [60 X 102]	8'-0" [2.4]	—	—	—	—	4'-0" [1.2]	10" [254]	12" [305]	46'-0" [14.0]	4" X 10 5/16" [102 X 262]	46'-0" [14.0]	—	—	—	—	1" X 54" [25 X 1372]	1"-8NC X 5 1/2"	1" X 54" [25 X 1372]	1"-8NC X 5 1/2"
		T-5010-3720	[15.2] NOM.	10'-0" [3.1]	2 3/8" X 4" [60 X 102]	10'-0" [3.1]	—	—	—	—	5'-0" [1.5]	10" [254]	12" [305]	45'-0" [13.7]	4" X 10 3/16" [102 X 259] ③	45'-0" [13.7]	—	—	—	—	1" X 54" [25 X 1372]	1"-8NC X 5 1/2"	1 1/8" X 66" [29 X 1676]	1 1/8"-8 NC X 5 1/2"
		T-5012-3720	± 6" [+152]	12'-0" [3.7]	2 3/8" X 4 1/2" [60 X 114]	12'-0" [3.7]	—	—	—	—	6'-6" [2.0]	12" [305]	15" [381]	43'-6" [13.3]	4 1/2" X 10 1/2" [114 X 267] ③	43'-6" [13.3]	—	—	—	—	1" X 54" [25 X 1372]	1"-8NC X 5 1/2"	1 1/8" X 66" [29 X 1676]	1 1/8"-8 NC X 5 1/2"
		T-5014-3720		14'-0" [4.3]	2 3/8" X 4 1/2" [60 X 114]	14'-0" [4.3]	—	—	—	—	7'-6" [2.3]	12" [305]	15" [381]	42'-6" [12.9]	4 1/2" X 10 3/8" [114 X 264] ③	42'-6" [12.9]	—	—	—	—	1" X 54" [25 X 1372]	1"-8NC X 5 1/2"	1 1/8" X 66" [29 X 1676]	1 1/8"-8 NC X 5 1/2"
		T-5016-3720		16'-0" [4.9]	2 3/8" X 4 1/2" [60 X 114]	16'-0" [4.9]	—	—	—	—	8'-1" [2.5]	12" [305]	15" [381]	42'-0" [12.8]	4 1/2" X 10 1/4" [114 X 260] ③	42'-0" [12.8]	—	—	—	—	1" X 54" [25 X 1372]	1"-8NC X 5 1/2"	1 1/8" X 66" [29 X 1676]	1 1/8"-8 NC X 5 1/2"

NOTES:

1) SEE SHEET ONE FOR DETAILS AND NOTES.
2) DIMENSIONS IN [ ] ARE METRIC. INCHES CONVERTED TO MILLIMETERS, FEET CONVERTED TO METERS.

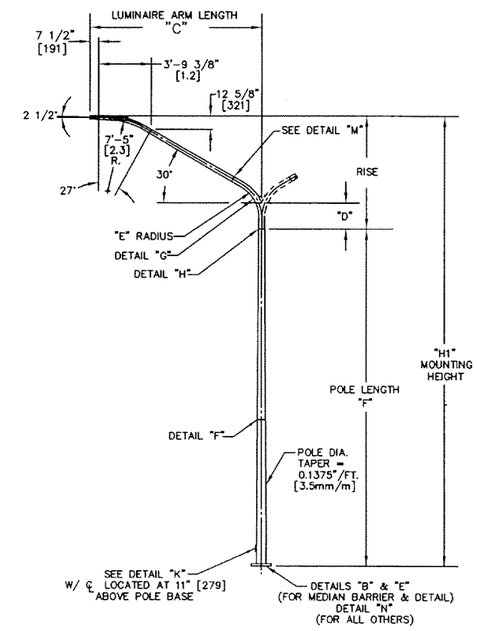

"T" SERIES

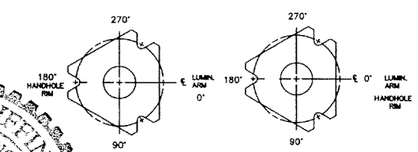

STANDARD

BRIDGE MOUNTED POLES

HANDHOLE ORIENTATION

CONTRACTOR MUST VERIFY HANDHOLE ORIENTATION OF "BRIDGE MOUNT" POLES BEFORE FABRICATION.

JEFF L. GRIFFIN
STATE OF WASHINGTON
33457
REGISTERED PROFESSIONAL ENGINEER
3/26/04
EXPIRES 7/26/05

APPROVED
Manufacturer's Pole Plan
Approved For Listing As A
Pre-Approved Drawing
WSDOT Bridge & Structures Office
By GB Date 8/15/2004

REV	DATE	DESCRIPTION	BY	APPR
A	3/04	HEX HEAD BOLT SIZE	MHM	RD

AGENCY	
PROJECT	
DISTRIBUTOR	
CONTRACTOR	
CUSTOMER ORDER NO.	
AMERON NO.	

Ameron POLE PRODUCTS DIVISION

STATE OF WASHINGTON
"T" SERIES LIGHTING STANDARD

THIS DOCUMENT CONTAINS INFORMATION WHICH IS PROPRIETARY TO AMERON. IT SHALL NOT BE REPRODUCED, USED OR DISCLOSED TO ANYONE WITHOUT THE PRIOR WRITTEN PERMISSION OF AMERON.

DRAWN: MHM	DATE: 2/03	SCALE	DWG.NO.	REV.
APPR: RD	DATE: 2/03		W3720-2	A