| DESIGN NO. | POLE TYPE | TUBE SIZE |
|---|---|---|
| TA-10025-A | PS | 11E-5.07x3.95x8'-0" |
| TA-10025-B | I | 11E-5.35x3.95x10'-0" |

FINISH:
H.D. GALV.POLES TO ASTM-A123
H.D. GALV.BOLTS TO ASTM-A153

RATING NOTE:
DESIGNED PER: AASHTO 2001 4th.ed.
DESIGN LIFE: 25 YEARS
BASIC WIND SPEED: 90MPH

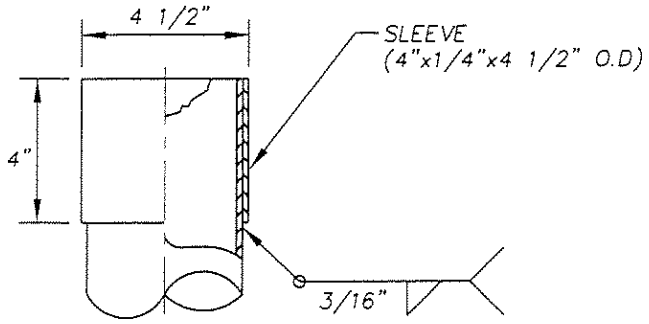


POLE TOP DETAIL

NOTE: ALL PIPES AND HOLES SHALL HAVE ROUND EDGES

APPROVED
Manufacturer's Pole Plan
Approved For Listing As A
Pre-Approved Drawing
WSDOT Bridge & Structures Office
By GB Date 4/6/2004

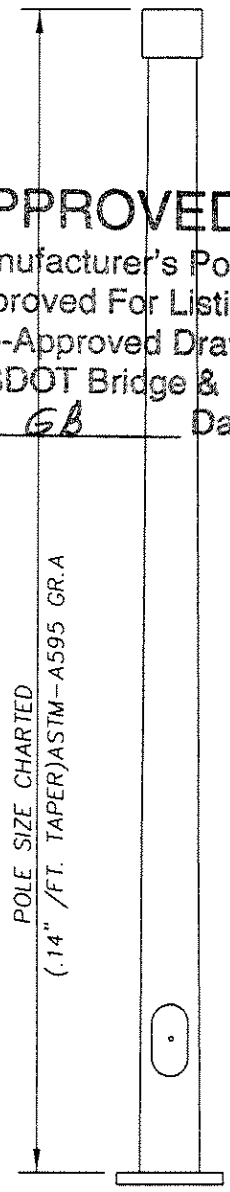


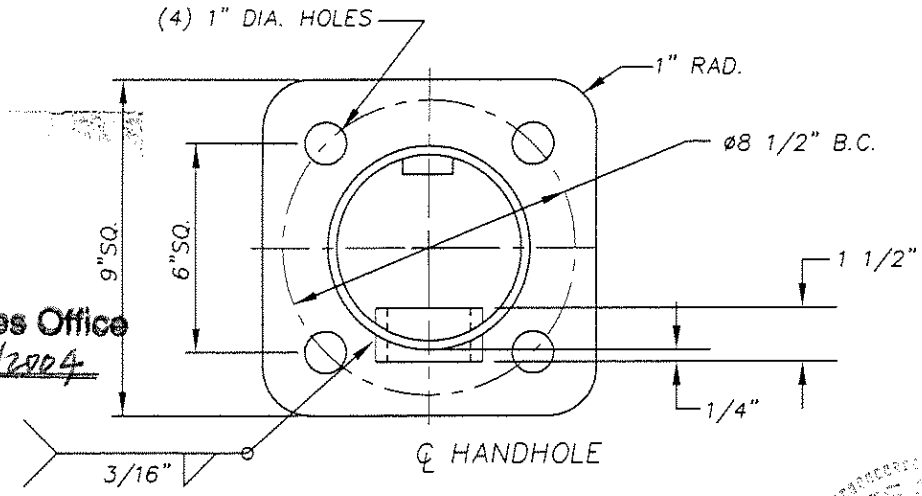


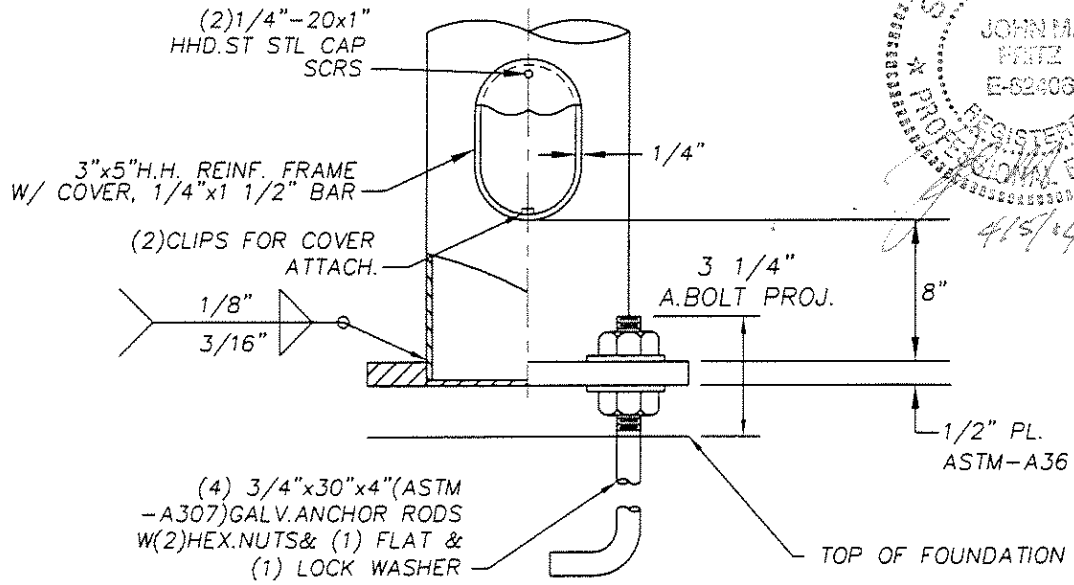


STATE OF OHIO
JOHN M. FRITZ
E-62603
REGISTERED PROFESSIONAL ENGINEER
4/5/04

| | | | | |
|---|---|---|---|---|
| R13 | | ADDED ROUND EDGES NOTE. LEG DIMENSION FOR A.BOLT | 3/17/04 | LCV |
| R12 | | REVISED TO AASHTO 2001 | 11/25/03 | LCV |
| R11 | 0634 1697 | TA-100025-A WAS 11E-5.22x4.1x8'-0" TA-100025-B WAS 11E-5.5x4.1x10'-0" DETAIL USED 3.95 TO FIT POLE TOP | 12/31/97 | JDJ |

REVISIONS

STD. SIGNAL WITH
POST TOP, TYPE PS & I
STATE OF WASHINGTON D.O.T.

LOF _____ ENG.REF.# _____
REQ.# Q408-06-95 S.O.# _____ CAD# TA-10025

Union Metal CORPORATION

DRAWN R.T.
DATE 10/20/75
CHECKED CA

DRAWING NO.
TA-10025

ORIGINAL