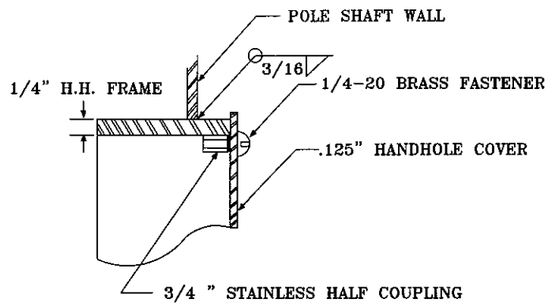

SECTION A-A

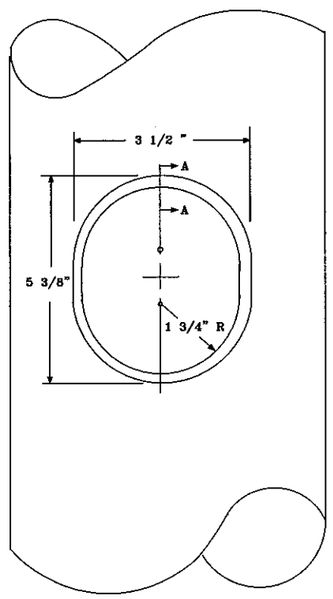

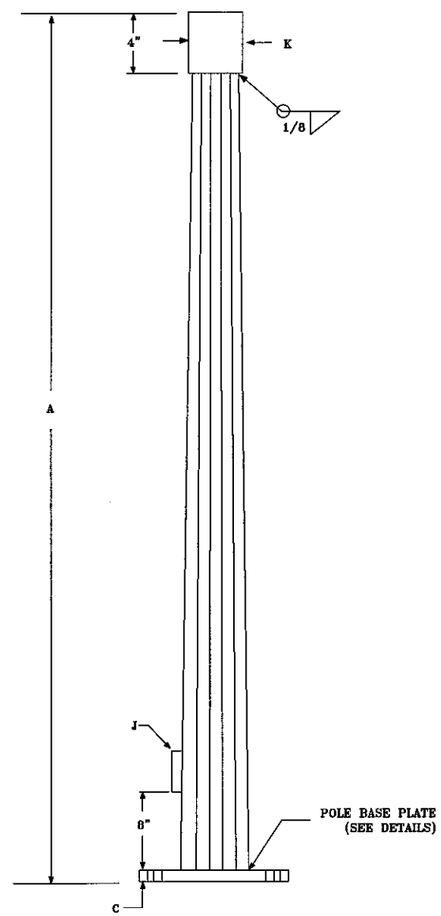

NOTE: HOLE FOR POLE SHAFT SHALL BE EQUAL TO THE POLE BASE DIAMETER + 1/16 "

TYPE	QTY.
RM	
FB	

MARK	ITEM	TYPE RM	TYPE FB
A	HEIGHT	10'0"	14'0"
B	POLE BASE DIA	*	*
C	PLATE THICKNESS	1/2 "	1/2 "
D	PLATE WIDTH	*	*
E	HOLE DIA	1"	1"
F	BOLT CIRCLE	15"	15"
G	ANCHOR BOLT **	3/4*30*4	3/4*30*4
H	LEVELING NUT & WASHER	3/4"	3/4 "
J	HAND HOLE SIZE	3 1/2*3	3 1/2*3
K	SLIPFITTER DIA. (I.D.)	4"	4"
L	CAP DIA	NONE	NONE

* TAPERED DODECAGONAL SHAFT, 4" O.D. AT SLIP FITTER WELD - (TAPER = .14"/FT)

** WITH 6" END THREAD, EACH BOLT FURNISHED WITH 2 HEX NTS AND 2 FLAT WASHERS

MATERIAL CHART

SLIPFITTER - 4" DIA GALV. STD. STEEL PIPE, ASTM A53, GR. B
SHAFT - .188" STEEL, ASTM A572 GR 50
BASE PLATE - GALV STEEL PLATE, ASTM A572 GR 50
HAND HOLE - GALV. STEEL, S.S. FASTENERS
ANCHOR BOLTS - ASTM A307, GALV. STEEL
NUTS, WASHERS - GALV. STEEL

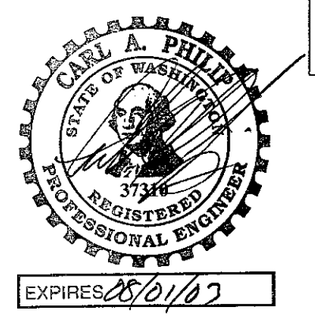

NOTE:

SUPPORT SHALL COMPLY WITH AASHTO "STANDARD SPECIFICATIONS FOR STRUCTURAL SUPPORTS FOR HIGHWAY SIGNS, LUMINAIRES AND TRAFFIC SIGNALS", 4TH ED. 2001, WITH 90 MPH WIND.

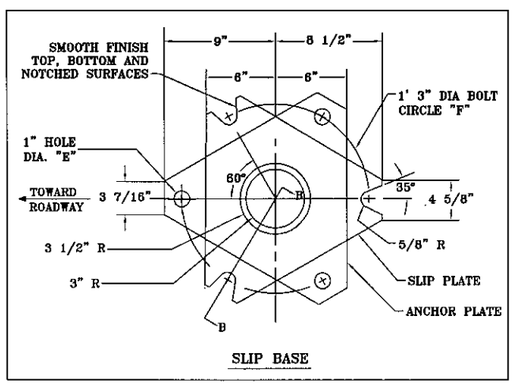

SLIP BASE

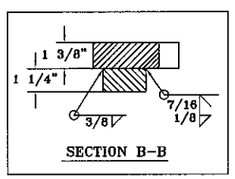

SECTION B-B

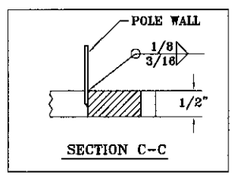

SECTION C-C

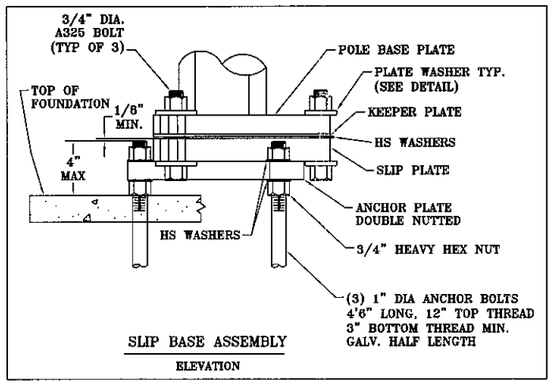

SLIP BASE ASSEMBLY

ELEVATION

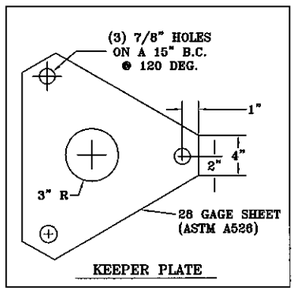

KEEPER PLATE

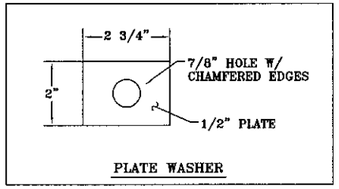

PLATE WASHER

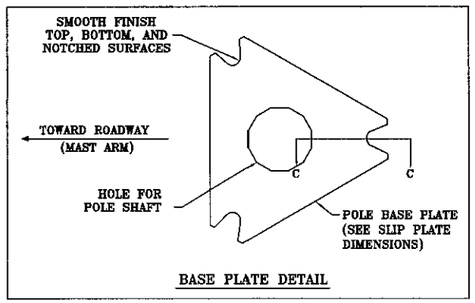

BASE PLATE DETAIL

DESIGNED BY D.S. KOZOL	DATE 3/3/03	NORTHWEST SIGNAL SUPPLY 12965 SW HERMAN RD, TUALATIN, OR 97062
DRAWN BY D.S. KOZOL	DATE 3/3/03	STATE OF WASHINGTON RAMP METER & FLASHING BEACON POLES — REVISION
NOTES		DRAWING NO. NWS3535B