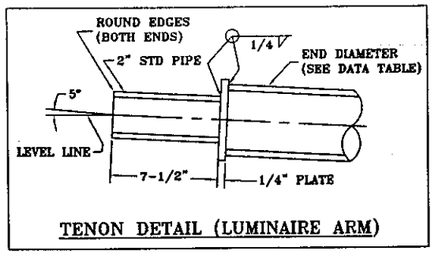

TENON DETAIL (LUMINAIRE ARM)

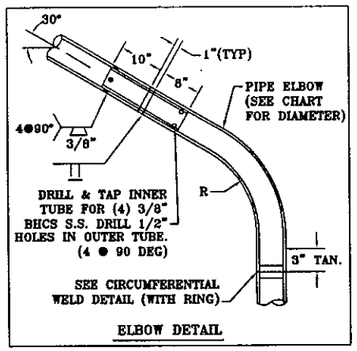

ELBOW DETAIL

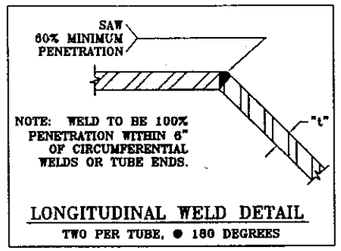

LONGITUDINAL WELD DETAIL

TWO PER TUBE, ● 180 DEGREES

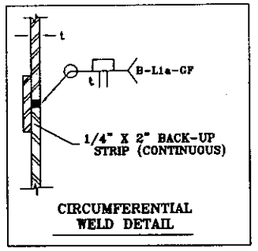

CIRCUMFERENTIAL WELD DETAIL

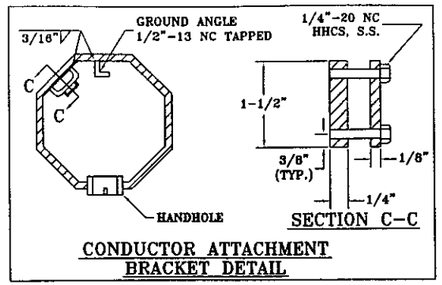

SECTION C-C

CONDUCTOR ATTACHMENT BRACKET DETAIL

HANDHOLE DETAIL

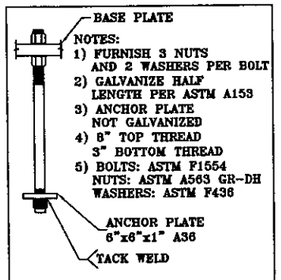

ANCHOR BOLT DETAIL

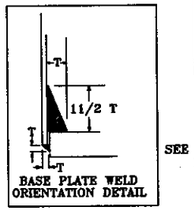

BASE PLATE WELD ORIENTATION DETAIL

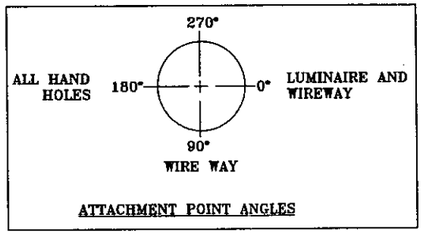

ATTACHMENT POINT ANGLES

STRAIN POLE DIMENSION CHART							
ITEM	1900#	2700#	3700#	4800#	5600#	6300#	7200#
POLE GAGE	.25	.25	.25	.3125	.3125	.3125	.3125
BASE PLATE WIDTH	15"	15"	17"	18"	18"	20"	20"
ANCHOR BOLT CIRCLE	16"	16"	19"	20"	20"	22"	22"
POLE BASE DIA	10"	12"	14"	14"	15"	16"	17"
BASE PLATE THICKNESS	1 3/4"	2"	2 1/2"	2 1/2"	2 3/4"	2 3/4"	3"
ANCHOR BOLT SIZE	1"x36"	1 1/4"x60"	1 3/8"x60"	1 1/2"x60"	1 1/2"x60"	1 3/4"x66"	1 3/4"x66"
ANCHOR PLATE SIZE	1"x3"x3"	1"x4"x4"	1"x4"x4"	1"x5"x5"	1"x5"x5"	1"x6"x6"	1"x6"x6"

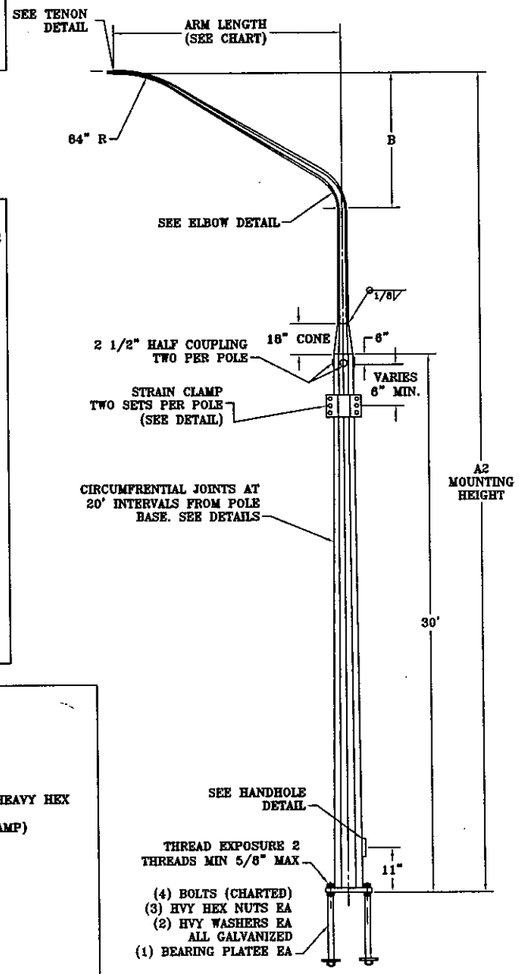

TYPE V STANDARD W/ TYPE 1 ARM

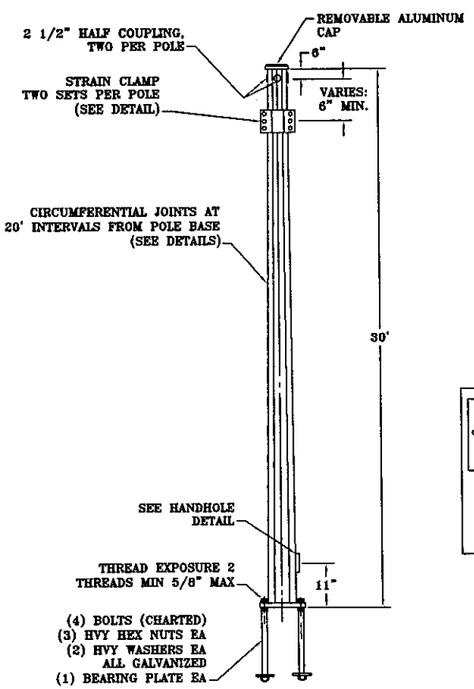

TYPE IV STANDARD

LUMINAIRE ARM DATA				
ARM LENGTH (FT)	ELBOW DIAMETER (IN)(1)	R (IN)	THICKNESS (IN)	B (IN)
6	4	12	.188	24
8	4	12	.188	36
10	4	12	.188	51
12	4	12	.188	65
14	4	12	.188	79
16	4	12	.188	93

(1) ELBOWS TO BE MADE FROM STD PIPE

MATERIALS:
SHAFTS: ASTM A572 GR50
PLATES: ASTM A572 GR50
PIPE: ASTM A53 GRB
CONN. BOLTS: AASHTO M164
ANCHOR BOLTS: ASTM F1554 GR 105
GALVANIZING: AASHTO M111&M232

WELDING:
WELDING OF STEEL STRUCTURES SHALL BE IN ACCORDANCE WITH SECTION 5.15 OF THE "STANDARD SPECIFICATIONS FOR STRUCTURAL SUPPORTS FOR HIGHWAY SIGNS, LUMINAIRES AND TRAFFIC SIGNALS", AASHTO 2001

DESIGN CRITERIA
2001 AASHTO STANDARD SPECIFICATIONS FOR STRUCTURAL SUPPORTS FOR HIGHWAY SIGNS, LUMINAIRES, AND TRAFFIC SIGNALS.
-25 YEAR DESIGN LIFE/RECURRENCE INTERVAL

WIND VELOCITY
90 MPH ISOTACH

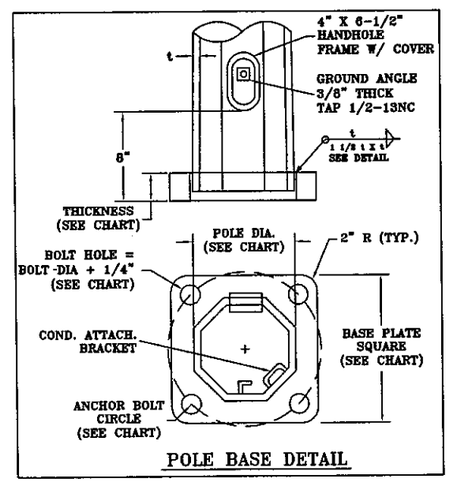

POLE BASE DETAIL

POLE SCHEDULE			
POLE #	CLASS	A2	LUM. LEN.

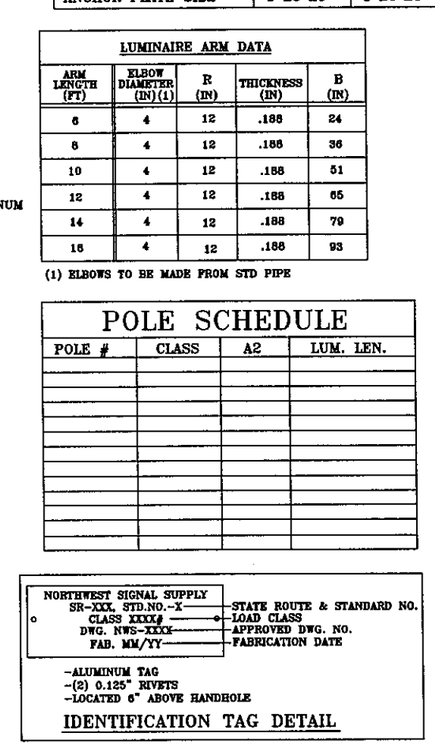

IDENTIFICATION TAG DETAIL

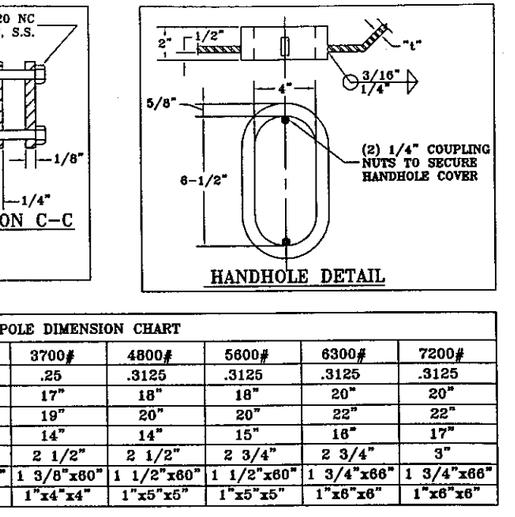

CONE DETAIL

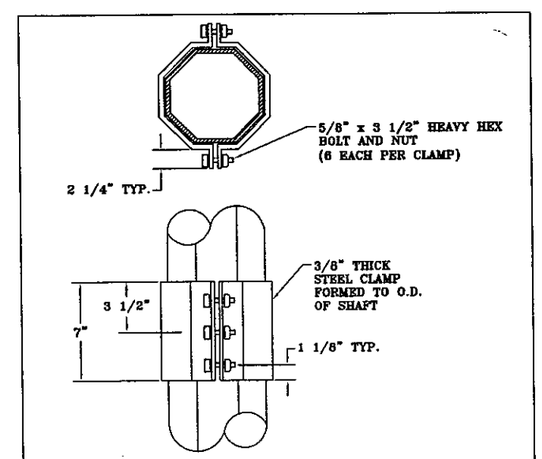

POLE BASE DETAIL

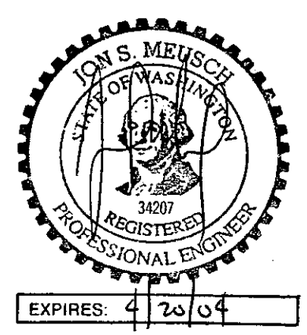

EXPIRES: 4/20/04

DESIGNED BY D.S. KOZOL 11/12/02 DRAWN BY D.S. KOZOL 11/12/02	NORTHWEST SIGNAL SUPPLY 12965 SW HERMAN RD, TUALATIN, OR 97062	
	STATE OF WASHINGTON TYPE V & IV STRAIN POLE STANDARDS WITH TYPE II ARM	REVISION
	JOB NO.:	DRAWING NO.: NWS3525