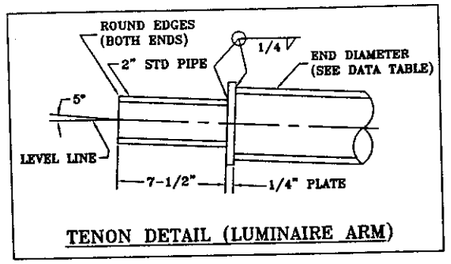

TENON DETAIL (LUMINAIRE ARM)

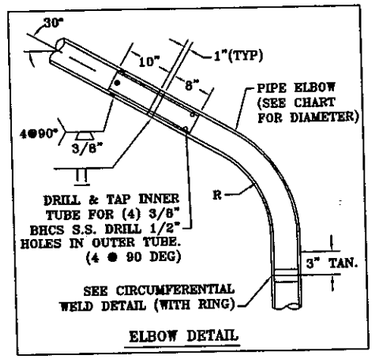

ELBOW DETAIL

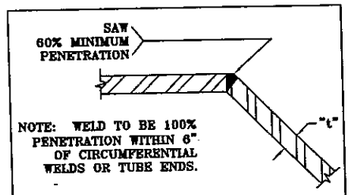

LONGITUDINAL WELD DETAIL

TWO PER TUBE, @ 180 DEGREES

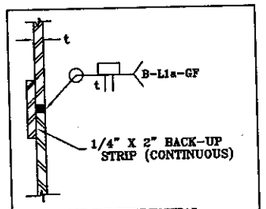

CIRCUMFERENTIAL WELD DETAIL

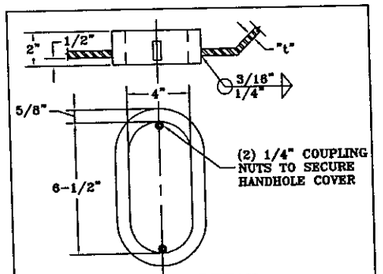

HANDHOLE DETAIL

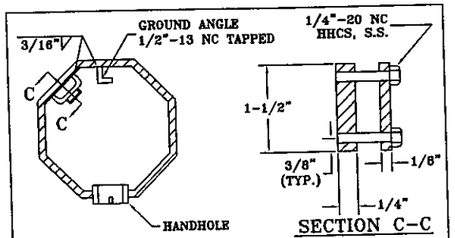

CONDUCTOR ATTACHMENT BRACKET DETAIL

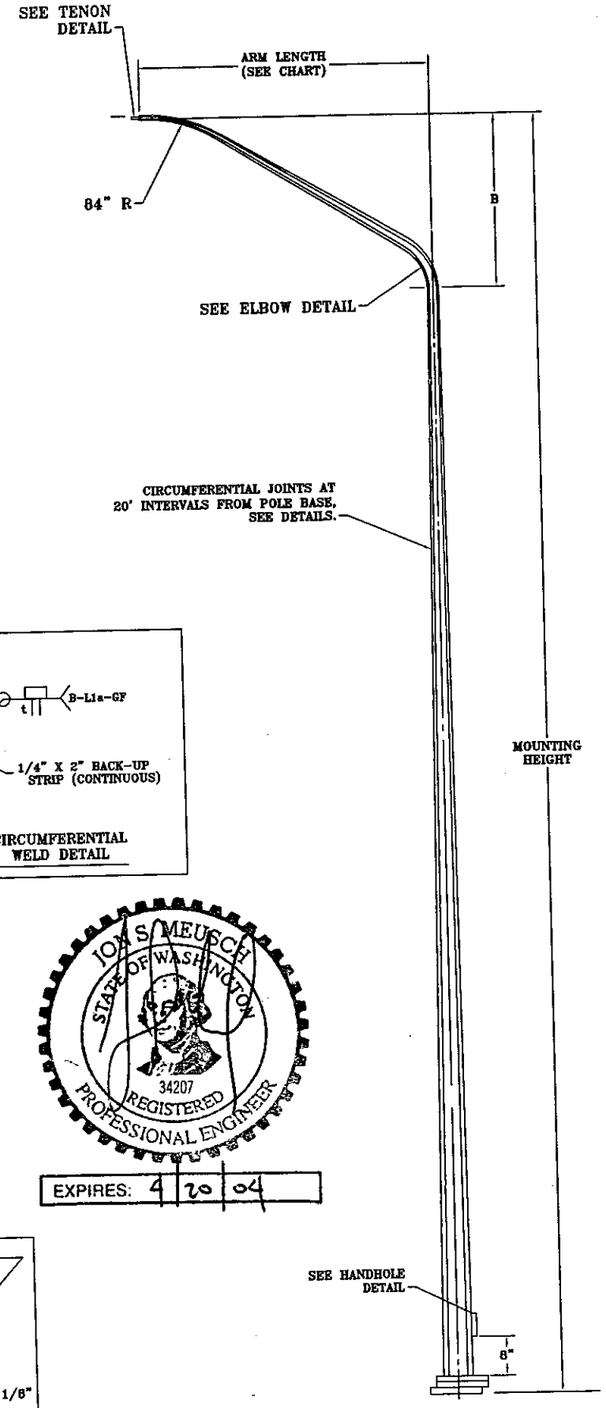

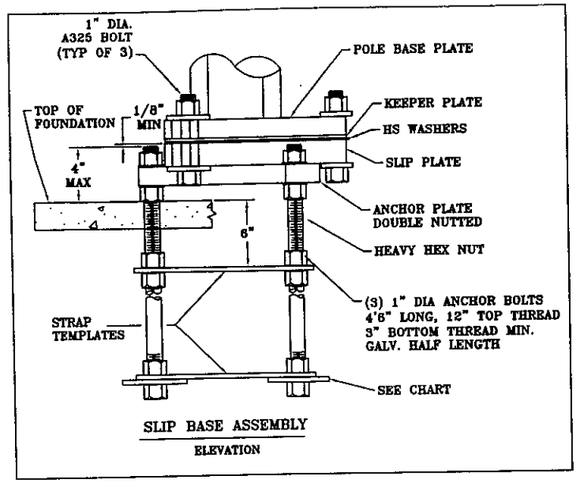

SLIP BASE ASSEMBLY

ELEVATION

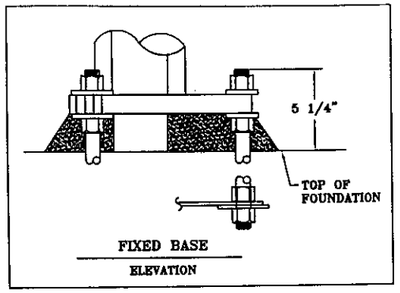

FIXED BASE

ELEVATION

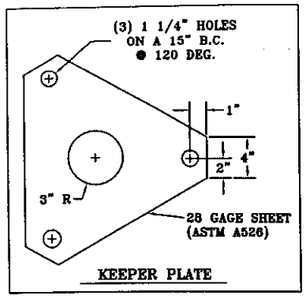

KEEPER PLATE

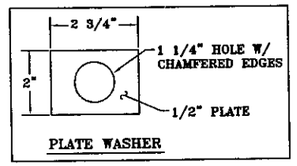

PLATE WASHER

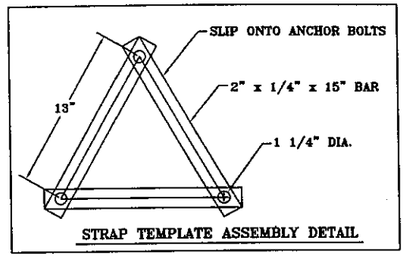

STRAP TEMPLATE ASSEMBLY DETAIL

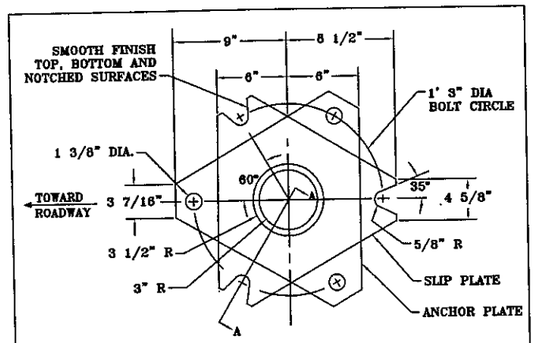

SLIP BASE

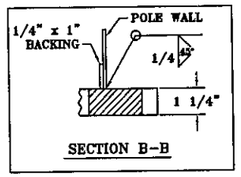

SECTION B-B

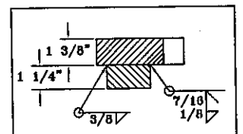

SECTION A-A

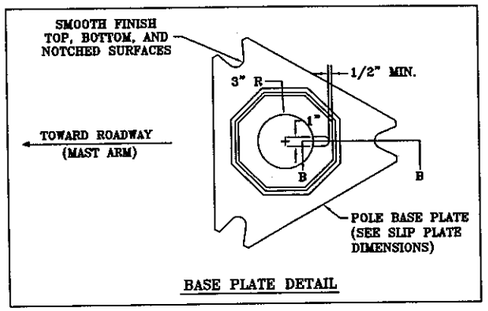

BASE PLATE DETAIL

POLE SCHEDULE

POLE NUMBER	MOUNTING HEIGHT (FT)	ARM LENGTH (FT)	BASE TYPE

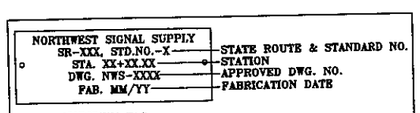

-ALUMINUM TAG
-(2) 0.125" RIVETS
-LOCATED 6" ABOVE HANDHOLE

IDENTIFICATION TAG DETAIL

LUMINAIRE ARM DATA

ARM LENGTH (FT)	ELBOW DIAMETER (IN) (2)	R (IN)	THICKNESS (IN) (1)	B (IN)
6	4	12	.188	24
8	4	12	.188	36
10	4	12	.188	51
12	4.5	15	.188	65
14	4.5	15	.188	79
16	4.5	15	.188	93

(1) ELBOWS TO BE MADE FROM STD PIPE

POLE DATA

MOUNTING HEIGHT (FT)	BASE DIAMETER (IN)	TOP DIAMETER (IN)	THICKNESS (IN)	TOTAL LENGTH (FT)
25	7.38	5	.188	17
30	8.08	5	.188	22
35	8.78	5	.188	27
40	9.48	5	.188	32
45	10.18	5	.188	37
50	10.88	5	.188	42

MATERIALS:
SHAFTS: ASTM A572 GR50
PLATES: ASTM A572 GR50
PIPE: ASTM A53 GRB
CONN. BOLTS: AASHTO M164
ANCHOR BOLTS: ASTM F1554 GR 55
GALVANIZING: AASHTO M111&M232

WELDING:
WELDING OF STEEL STRUCTURES SHALL BE IN ACCORDANCE WITH SECTION 5.15 OF THE "STANDARD SPECIFICATIONS FOR STRUCTURAL SUPPORTS FOR HIGHWAY SIGNS, LUMINAIRES AND TRAFFIC SIGNALS", AASHTO 2001

DESIGN CRITERIA
2001 AASHTO STANDARD SPECIFICATIONS FOR STRUCTURAL SUPPORTS FOR HIGHWAY SIGNS, LUMINAIRES, AND TRAFFIC SIGNALS.
-25 YEAR DESIGN LIFE/RECURRENCE INTERVAL
-FATIGUE CATEGORY III
-VORTEX SHEDDING & NATURAL WIND GUSTS INCLUDED

WIND VELOCITY
90 MPH ISOTACH

CAFL AT CRITICAL CONNECTIONS
-POLE TO BASE PLATE CONNECTION = E
-LUMINAIRE SLIP FIT CONNECTION = B
-POLE SHAFT = B'

NOTE:
INSTALLATION OF A 50 FT POLE WITH DOUBLE MAST ARMS ON A SINGLE BASE IS NOT ALLOWED.

DESIGNED BY D.S. KOZOL 9/18/02	NORTHWEST SIGNAL SUPPLY 12965 SW HERMAN RD, TUALATIN, OR 97062	
DRAWN BY D.S. KOZOL 9/18/02	STATE OF WASHINGTON STANDARD J-1 LIGHT POLE TYPE II LUMINAIRE ARM	REVISION
	JOB NO.:	DRAWING NO.: NWS3515