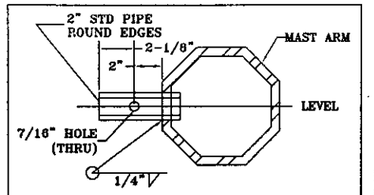


TENON DETAIL (TYPE "M" MOUNT)

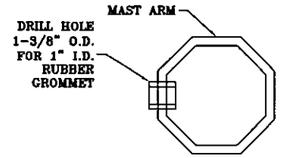


HOLE DETAIL (TYPE "N" MOUNT)
(OPTIONAL)

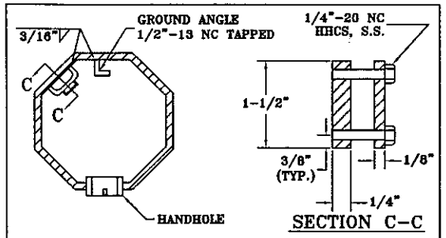


CONDUCTOR ATTACHMENT
BRACKET DETAIL

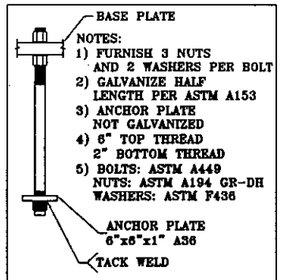


ANCHOR BOLT DETAIL

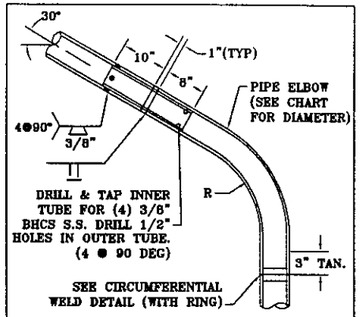


ELBOW DETAIL

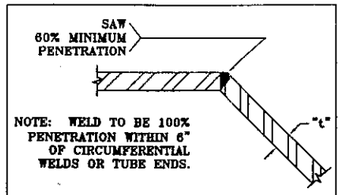


LONGITUDINAL WELD DETAIL
TWO PER TUBE, @ 180 DEGREES

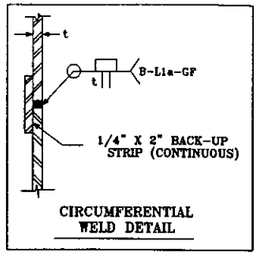


CIRCUMFERENTIAL
WELD DETAIL

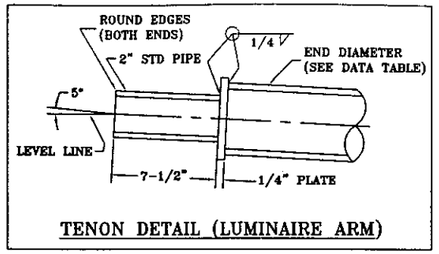


TENON DETAIL (LUMINAIRE ARM)

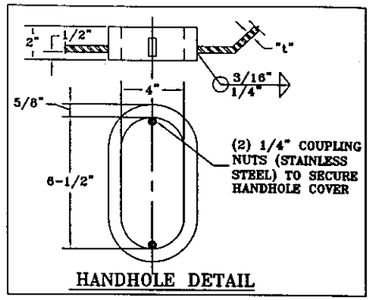


HANDHOLE DETAIL

POLE SCHEDULE

| POLE # | POLE DESIGNATION | MAST ARM LENGTH (FT) | POLE HEIGHT (FT) | MAST ARM HEIGHT A1 (FT) | MOUNTING HEIGHT A2 (FT) | LUM. ARM LENGTH C (FT) | TENON LOCATIONS FROM POLE CENTERLINE (FT) B1 | B3 | B6 | B9 | | 3/4" COUPLING FROM POLE CL (FT) | B5 | NOTES |
|---|---|---|---|---|---|---|---|---|---|---|---|---|---|---|
| | | | | | | | | | | | | | | |
| | | | | | | | | | | | | | | |
| | | | | | | | | | | | | | | |
| | | | | | | | | | | | | | | |
| | | | | | | | | | | | | | | |
| | | | | | | | | | | | | | | |

INTERSECTION:

LUMINAIRE ARM DATA

| ARM LENGTH (FT) | ELBOW DIAMETER (IN)(1) | R (IN) | THICKNESS (IN) | B (IN) |
|---|---|---|---|---|
| 6 | 4 | 12 | .188 | 24 |
| 8 | 4 | 12 | .188 | 36 |
| 10 | 4 | 12 | .188 | 51 |
| 12 | 4 | 12 | .188 | 65 |
| 14 | 4 | 12 | .188 | 79 |
| 16 | 4 | 12 | .188 | 93 |

(1) ELBOWS TO BE MADE FROM STD PIPE

POLE DATA

| ARM LENGTH | TYPE II POLE DIA | TYPE II POLE THICK | TYPE III POLE DIA | TYPE III POLE THICK | BASE PLATE SQUARE | BASE PLATE THICK | ANCHOR BOLTS BOLT CIRCLE | ANCHOR BOLTS DIA X L X H |
|---|---|---|---|---|---|---|---|---|
| 15-45 | 14 | .25 | 14 | .25 | 18 | 2 | 18 | 1.5 X 60 X PL. |
| >45-65 | 17 | .3125 | 17 | .3125 | 22 | 2.25 | 22 | 2 X 60 X PL. |

MAST ARM DATA

| ARM LENGTH | ARM BASE DIA | ARM THICK. | ARM & POLE PLATE SQUARE | ARM PL THICK | BOLT SIZE | POLE PL THICK | BOLT CIRCLE | MAX LOAD AREA X DIST. (FT^3) |
|---|---|---|---|---|---|---|---|---|
| 15 | 6 | .188 | 15 X 15 | 1.5 | 1.25 X 3 | 1.5 | 15 | 301 |
| 20 | 7 | .188 | 15 X 15 | 1.5 | 1.25 X 3 | 1.5 | 15 | 433 |
| 25 | 8 | .25 | 15 X 15 | 1.5 | 1.25 X 3 | 1.5 | 15 | 639 |
| 30 | 9 | .25 | 15 X 15 | 1.75 | 1.25 X 3 | 1.5 | 15 | 849 |
| 35 | 10 | .25 | 15 X 15 | 1.75 | 1.25 X 4 | 1.5 | 15 | 1059 |
| 40 | 11 | .25 | 15 X 15 | 2 | 1.25 X 4 | 1.5 | 15 | 1269 |
| 45 | 11 | .25 | 15 X 15 | 2 | 1.25 X 4 | 1.5 | 15 | 1479 |
| 50 | 12 | .25 | 20 X 20 | 2.25 | 1.5 X 4 | 1.75 | 19.5 | 1789 |
| 55 | 13 | .25 | 20 X 20 | 2.25 | 1.5 X 4 | 1.75 | 19.5 | 2119 |
| 60 | 14 | .25 | 20 X 20 | 2.25 | 1.5 X 4.5 | 1.75 | 19.5 | 2464 |
| 65 | 15 | .25 | 20 X 20 | 2.25 | 1.5 X 4.5 | 1.75 | 19.5 | 2802 |

JON S. MEUSCH
STATE OF WASHINGTON
34207
REGISTERED
PROFESSIONAL ENGINEER
EXPIRES: 4/20/04

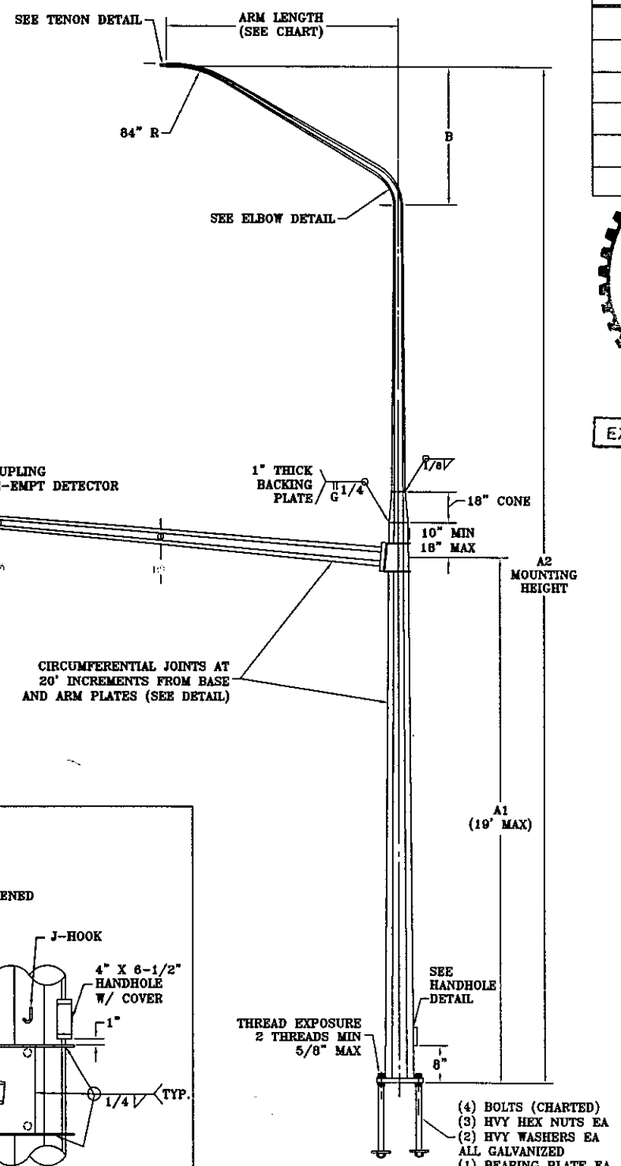


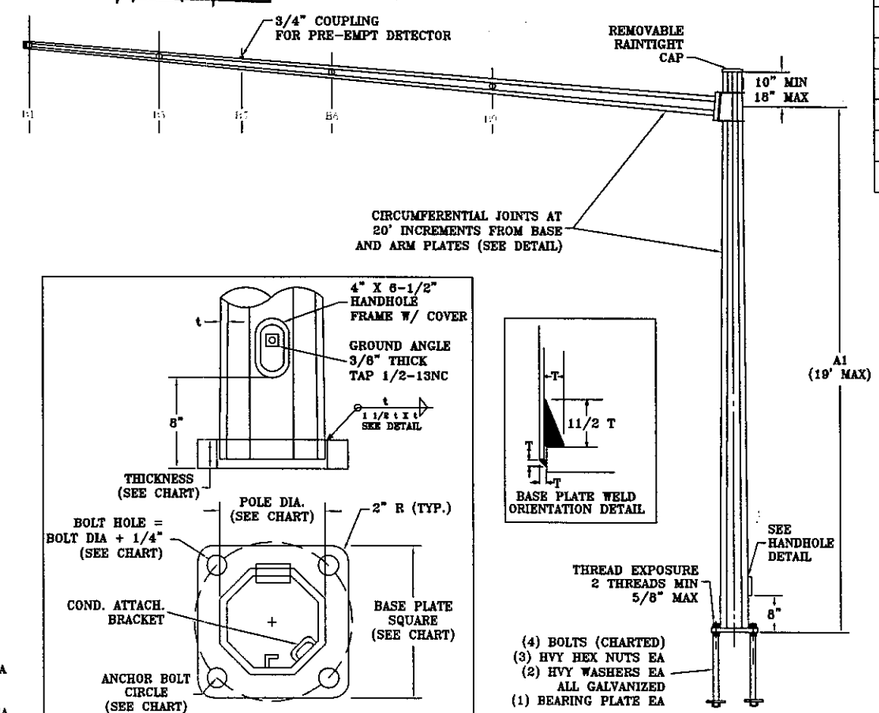


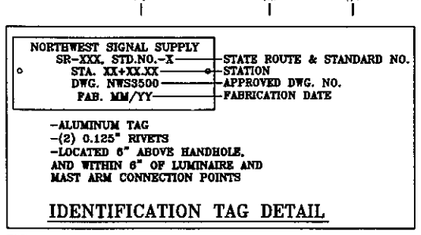


IDENTIFICATION TAG DETAIL

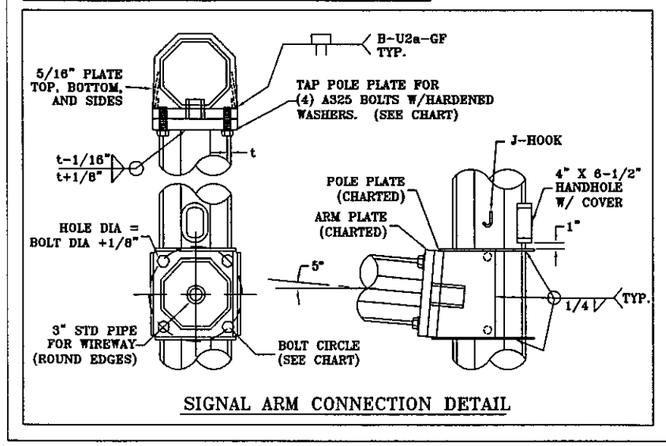


SIGNAL ARM CONNECTION DETAIL

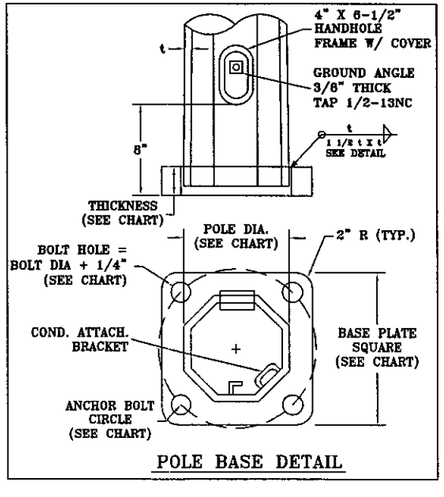


POLE BASE DETAIL




BASE PLATE WELD
ORIENTATION DETAIL

MATERIALS:
SHAFTS: ASTM A572 GR50
PLATES: ASTM A572 GR50
PIPE: ASTM A53 GRB
CONN. BOLTS: AASHTO M164
ANCHOR BOLTS: ASTM F1554 GR 105
GALVANIZING: AASHTO M111&M232

WELDING:
WELDING OF STEEL STRUCTURES SHALL BE IN ACCORDANCE WITH SECTION 5.15 OF THE "SPECIFICATIONS SUPPORTS OF HIGHWAY SIGNS, SIGNALS, LUMINAIRES AND TRAFFIC SIGNALS", AASHTO 2001

DESIGN CRITERIA
2001 AASHTO STANDARD SPECIFICATIONS FOR STRUCTURAL SUPPORTS FOR HIGHWAY SIGNS, LUMINAIRES, AND TRAFFIC SIGNALS.
-25 YEAR DESIGN LIFE/RECURRENCE INTERVAL
-FATIGUE CATEGORY III
-GALLOPING & TRUCK-INDUCED FATIGUE INCLUDED

WIND VELOCITY
90 MPH ISOTACH

MAXIMUM TRUCK-INDUCED FATIGUE
65 MPH

CAFL AT CRITICAL CONNECTIONS
-POLE TO BASE PLATE CONNECTION = E
-ARM TO SIMPLEX PLATE CONNECTION = E
-SIMPLEX GUSSETS = E'
-POLE WALL AT SIMPLEX GUSSET = E'
-POLE CROSS SECTION AT SIMPLEX GUSSET = E
-POLE SHAFT = B'

| | |
|---|---|
| DESIGNED BY D.S. KOZOL 9/18/02 | NORTHWEST SIGNAL SUPPLY<br>12965 SW HERMAN RD, TUALATIN, OR 97062 |
| DRAWN BY D.S. KOZOL 9/18/02 | STATE OF WASHINGTON<br>TYPE II & III MAST ARM POLE<br>TYPE II LUMINAIRE ARM |
| | REVISION |
| | JOB NO.: |
| | DRAWING NO.: NWS3505 |