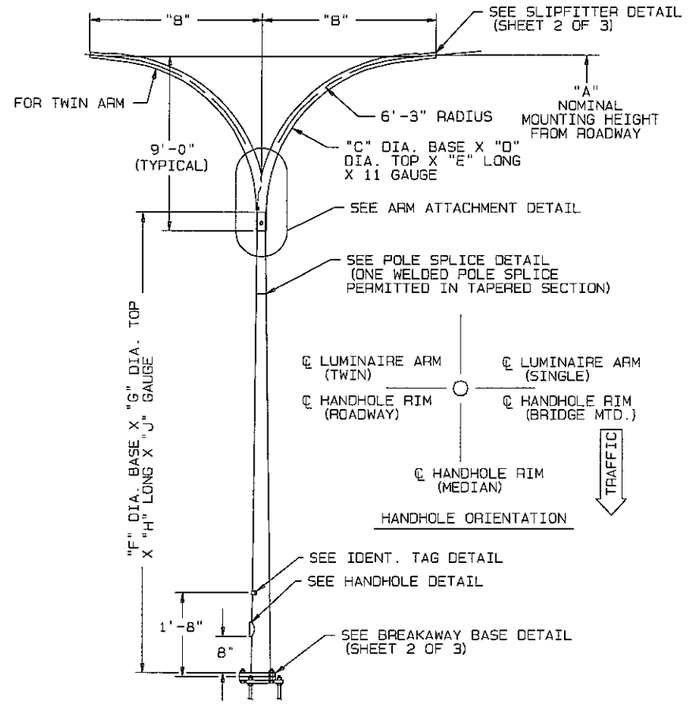

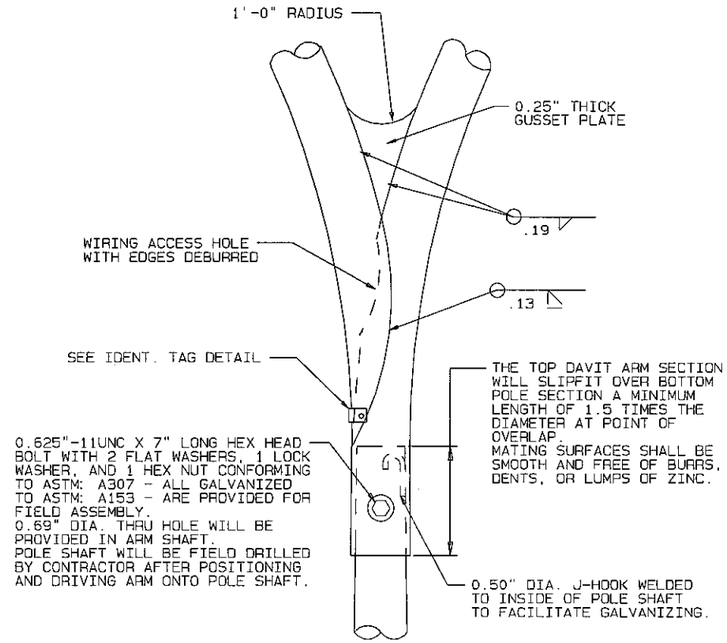

ARM ATTACHMENT DETAIL

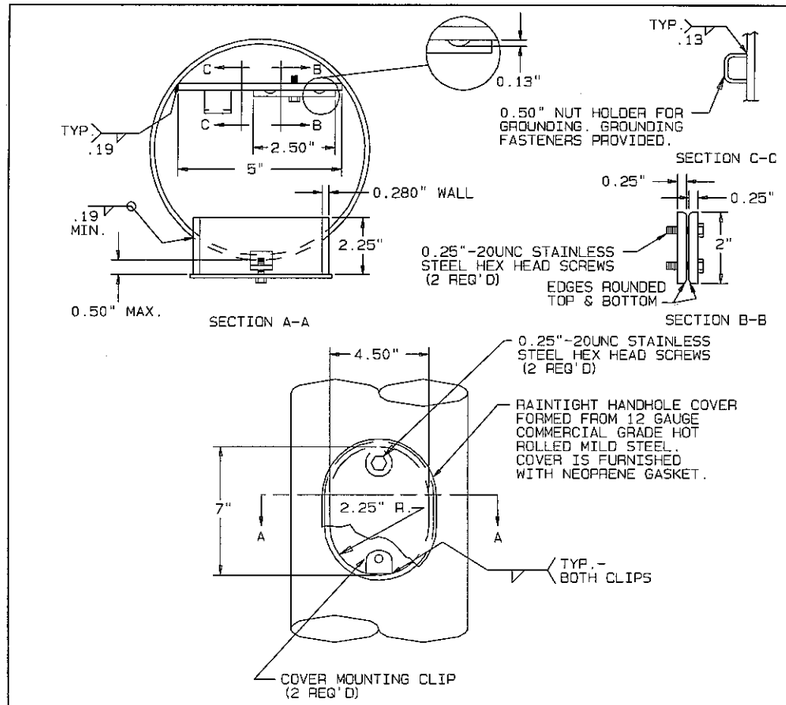

HANDHOLE DETAIL

POLE AND ARM DATA

QTY.	CATALOG DESCRIPTION	NOMINAL MOUNTING HEIGHT (±0"-6") "A"	ARM DESCRIPTION				POLE DESCRIPTION			
			ARM LENGTH "B"	ARM SHAFT BASE O.D. "C"	ARM SHAFT TOP O.D. "D"	ARM SHAFT LENGTH "E"	BASE O.D. "F"	TOP O.D. "G"	SHAFT LENGTH "H"	WALL GAUGE "J"
	DS90-WA-6S (D) -30	30'-0"	6'-0"	5.41"	3.77"	11'-8"	8.05"	4.93"	22'-3"	11
	DS90-WA-8S (D) -30	30'-0"	8'-0"	5.41"	3.52"	13'-6"	8.05"	4.93"	22'-3"	11
	DS90-WA-10S (D) -30	30'-0"	10'-0"	5.41"	3.26"	15'-4"	8.05"	4.93"	22'-3"	11
	DS90-WA-12S (D) -30	30'-0"	12'-0"	5.41"	3.00"	17'-2"	8.05"	4.93"	22'-3"	11
	DS90-WA-14S (D) -30	30'-0"	14'-0"	5.41"	2.75"	19'-0"	8.05"	4.93"	22'-3"	11
	DS90-WA-16S (D) -30	30'-0"	16'-0"	5.41"	2.40"	21'-6"	8.05"	4.93"	22'-3"	11
	DS90-WA-6S (D) -40	40'-0"	6'-0"	5.41"	3.77"	11'-8"	9.45"	4.93"	32'-3"	11
	DS90-WA-8S (D) -40	40'-0"	8'-0"	5.41"	3.52"	13'-6"	9.45"	4.93"	32'-3"	11
	DS90-WA-10S (D) -40	40'-0"	10'-0"	5.41"	3.26"	15'-4"	9.45"	4.93"	32'-3"	11
	DS90-WA-12S (D) -40	40'-0"	12'-0"	5.41"	3.00"	17'-2"	9.45"	4.93"	32'-3"	11
	DS90-WA-14S (D) -40	40'-0"	14'-0"	5.41"	2.75"	19'-0"	9.45"	4.93"	32'-3"	11
	DS90-WA-16S (D) -40	40'-0"	16'-0"	5.41"	2.40"	21'-6"	9.45"	4.93"	32'-3"	11
	DS90-WA-6S (D) -50	50'-0"	6'-0"	5.41"	3.77"	11'-8"	10.85"	4.93"	42'-3"	7
	DS90-WA-8S (D) -50	50'-0"	8'-0"	5.41"	3.52"	13'-6"	10.85"	4.93"	42'-3"	7
	DS90-WA-10S (D) -50	50'-0"	10'-0"	5.41"	3.26"	15'-4"	10.85"	4.93"	42'-3"	7
	DS90-WA-12S (D) -50	50'-0"	12'-0"	5.41"	3.00"	17'-2"	10.85"	4.93"	42'-3"	7
	DS90-WA-14S (D) -50	50'-0"	14'-0"	5.41"	2.75"	19'-0"	10.85"	4.93"	42'-3"	7
	DS90-WA-16S (D) -50	50'-0"	16'-0"	5.41"	2.40"	21'-6"	10.85"	4.93"	42'-3"	7

S = SINGLE ARM (D) = TWIN ARM

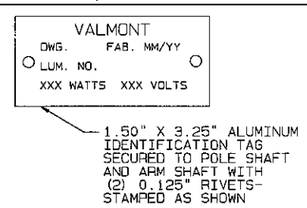

IDENT. TAG DETAIL

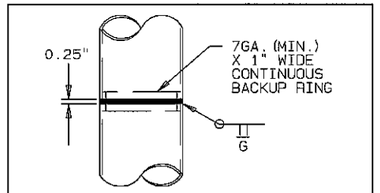

POLE SPLICE DETAIL

MATERIAL DATA

COMPONENT	ASTM DESIGNATION	MIN. YIELD (KSI)
POLE & ARM SHAFTS	A595 GR.A	55
BASE PLATE	A572 GR.50	50
BOTTOM SLIP PLATE	A572 GR.50	50
ANCHOR PLATE	A572 GR.50	50
OTHER PLATES	A36	36
PIPE	A501, A618, OR A513-36KSI	

MATERIAL DATA

COMPONENT	ASTM DESIGNATION	MIN. YIELD (KSI)
KEEPER PLATE-28 GA.	A446 GR.A	
ROUND TUBING	A513 TYPE 5	
STRUCTURAL CONN. HDWE	A325	
ANCHOR BOLTS	A449	
MISC. HARDWARE-SERIES 300 STAINLESS		
GALVANIZING	A123 & A153	

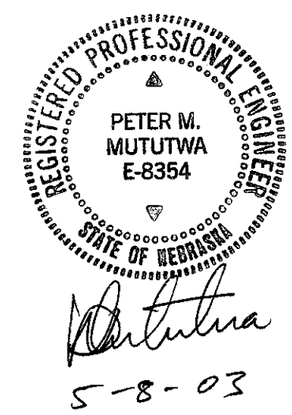

NOTES:
1. 2001 AASHTO STANDARD SPECIFICATIONS FOR STRUCTURAL SUPPORTS FOR HIGHWAY SIGNS, LUMINAIRES, AND TRAFFIC SIGNALS.
2. 90 MPH - DESIGN WIND SPEED.
3. 3.3 FT^2/50 LBS - DESIGN LUMINAIRE PA/WT.
4. IN THE POLE AND ARM DATA, WALL GAUGE "J" WILL CHANGE WHEN THE MOUNTING HEIGHT REQUIRED ADJUSTS THE BASE O.D. "F" TO THE FOLLOWING:
   A. 10.00" OR LESS - WALL GAUGE WILL BE 11 GA.
   B. 10.01" THRU 12.00" - WALL GAUGE WILL BE 7 GA.
   THE WALL GAUGE "J" WILL REMAIN THE SAME FOR BOTH THE SINGLE AND TWIN ARM CONDITIONS.
5. THE ALLOWABLE MAXIMUM SIGN AREA LOCATED 9'-6" ABOVE THE POLE BASE WILL BE 10 SQUARE FEET FOR ALL ARMS AND ALL MOUNTING HEIGHTS REQUIRED EXCEPT THE FOLLOWING:
   A. IF TWIN 16'-0" ARMS ARE REQUIRED FOR 40'-0" MOUNTING HEIGHT WHICH WOULD ADJUST THE BASE O.D. "F" TO 10.00" OR LESS WITH 11 GAUGE WALL, THE MAXIMUM SIGN AREA WILL BE 5 SQUARE FEET.
6. STEEL SLIP BASES HAVE NOT BEEN APPROVED BY THE FHWA FOR USE ON STRUCTURES WITH AN H1 DIMENSION GREATER THAN 56'-6".

REV.	DATE	REVISION

VALMONT

VALMONT INDUSTRIES, INC.
VALLEY, NEBRASKA 68064
(402) 359-2201

ORDER NO. | SHEET OF

DATE: 04/30/03 | DRWN: JKC | JKC 04/30/03 | SHEET 1 OF 3 | REV.

TITLE STATE OF WASHINGTON LIGHTING STRUCTURES

DRAWING NO. DB00654