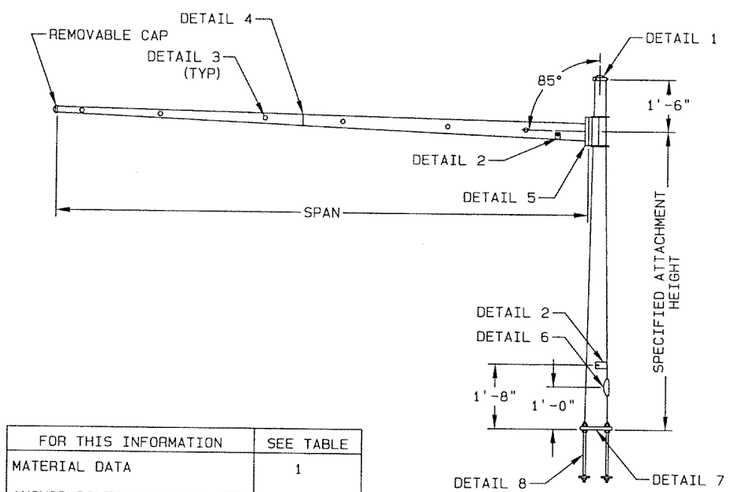

FOR THIS INFORMATION	SEE TABLE
MATERIAL DATA	1
ANCHOR BOLTS & BASE PLATE	2
POLE & SIGNAL ARM TUBES	2

WASHINGTON POLE TYPE II

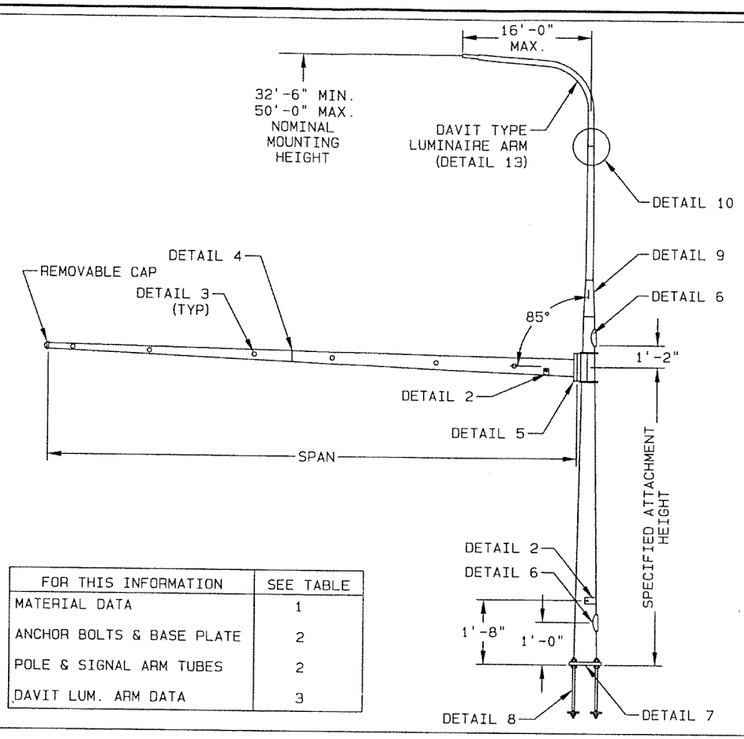

FOR THIS INFORMATION	SEE TABLE
MATERIAL DATA	1
ANCHOR BOLTS & BASE PLATE	2
POLE & SIGNAL ARM TUBES	2
DAVIT LUM. ARM DATA	3

WASHINGTON POLE TYPE III-J

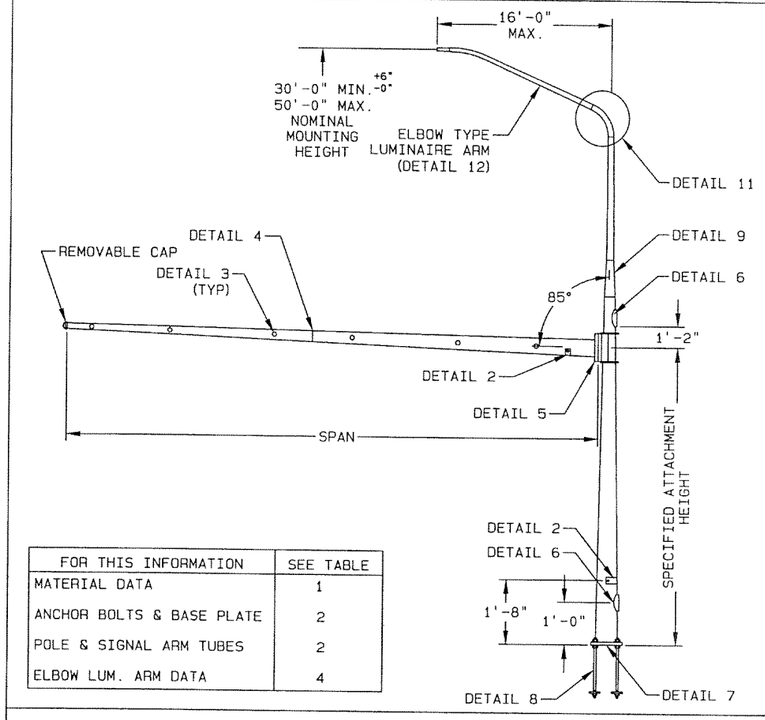

FOR THIS INFORMATION	SEE TABLE
MATERIAL DATA	1
ANCHOR BOLTS & BASE PLATE	2
POLE & SIGNAL ARM TUBES	2
ELBOW LUM. ARM DATA	4

WASHINGTON POLE TYPE III-T

DESIGN CRITERIA:
2001 AASHTO STANDARD SPECIFICATION FOR STRUCTURAL SUPPORTS FOR HIGHWAY SIGNS, LUMINAIRES, AND TRAFFIC SIGNALS.
-25 YEAR DESIGN LIFE/RECURRENCE INTERVAL
-FATIGUE CATEGORY III
-GALLOPING & TRUCK-INDUCED FATIGUE INCLUDED

WIND VELOCITY:
90 MPH ISOTACH.

MAXIMUM TRUCK-INDUCED FATIGUE
65 MPH

CAFL AT CRITICAL CONNECTIONS
-POLE TO BASE PLATE CONNECTION = D
-ARM TO SIMPLEX PLATE CONNECTION = D
-SIMPLEX GUSSETS = ET
-POLE WALL AT SIMPLEX GUSSET =E
-POLE SHAFT = B'

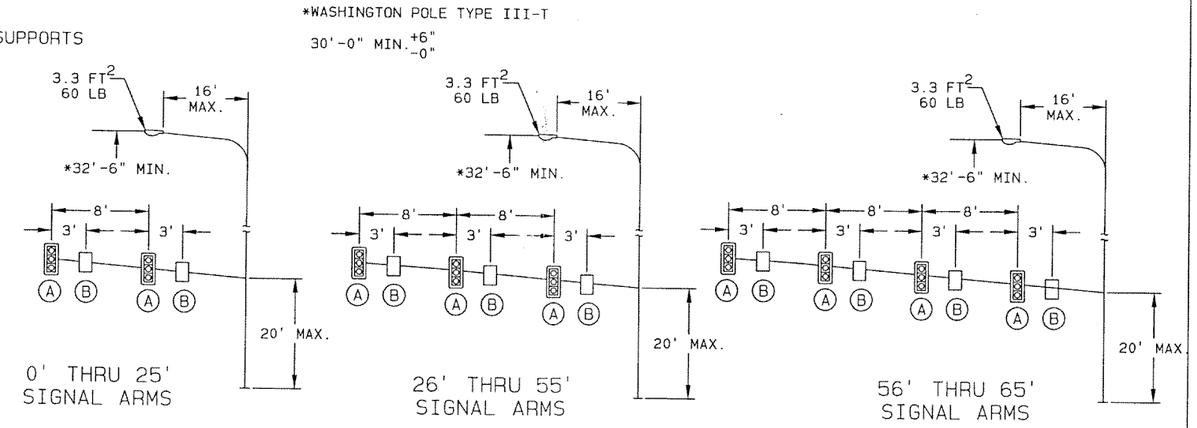

DEVICE	DESCRIPTION	PROJ. AREA (FT^2)	WEIGHT (LBS)
(A) SIGNAL	12"-3 SEC. SIGNAL WITH BACKPLATES	9.20	60
(B) SIGN	30" X 24" DIRECTIONAL SIGN	5.00	60

XYZ VALUES LISTED ON SHEET 2 OF 3 INCLUDE SIGNS AND SIGNALS, AND ONE LUMINAIRE WITH A 16'-0" ARM ON THE TYPE III POLES.

LOADING INFORMATION

TABLE 1: MATERIAL DATA

COMPONENT	DESIGNATION	MIN. YIELD (KSI)
POLE/ARM 0.250" & 0.313" WALL ARM TUBE - 7GA. & 3 GA. BASE PLATE	A572 GR. 65 A595 GR. A A36	65 55 36
SIGNAL ARM ATTACHMENT SIGNAL ARM CONN. BOLTS	A36 A325	36 --
ANCHOR BOLTS - 1.50" DIA. ANCHOR BOLTS - 2.00" DIA. NUTS WASHERS	A449 A449 ASTM A563 GR. C,D, OR DH ASTM F436	81 58 -- --
GALVANIZING	A123 & A153	--

APPROVED
Manufacturer's Pole Plan
Approved For Listing As A
Pre-Approved Drawing
WSDOT Bridge & Structures Office
By GB Date 10/12/2004

REGISTERED PROFESSIONAL ENGINEER
PETER M. MUTUTWA
E-8354
STATE OF NEBRASKA
10-11-04

REV	DRAWN BY-DATE	CHECK BY-DATE	DESCRIPTION
E	GSM1 09/24/04	JKC 09/29/04	ADD METRIC FORMAT, REV. POLE SPX CONN.'S
D	JEM 04/29/03	JEM 04/29/03	GUSSET THK. / ARM BASE O.D. WAS 9.50"
C	JKC 09/20/02	JKC 09/20/02	LOADING INFO. = D WAS = C
—	JKC 05/08/02	JKC 05/10/02	— — — — — — — — — — — — — — — —

TITLE STATE OF WASHINGTON
TRAFFIC SIGNAL STRUCTURES

VALMONT INDUSTRIES, INC. RESERVES THE RIGHT TO INSTALL VARIOUS, ENGINEER APPROVED, MATERIAL HANGING ACCOMMODATIONS TO FACILITATE THE MANUFACTURING PROCESS.

valmont
Valley, NE 68064
(402) 359-2201

DRAWING NUMBER DB00625
REV E