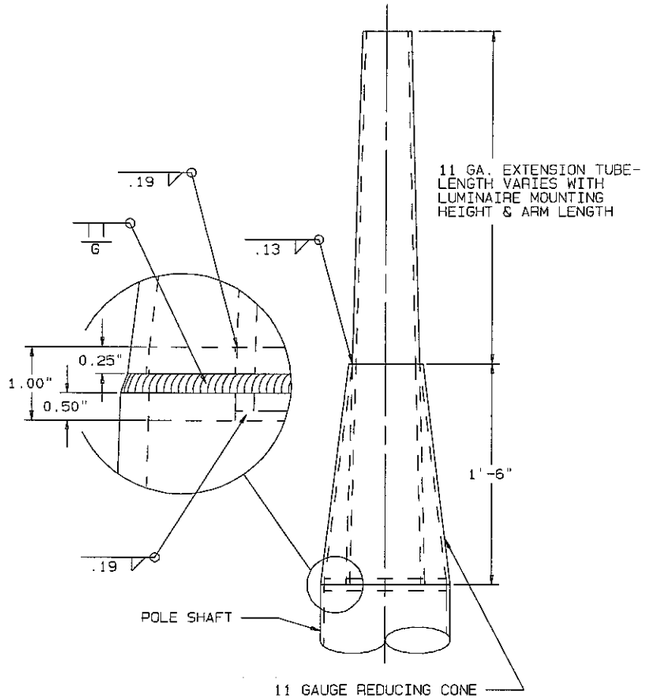

DETAIL 9 | LUMINAIRE CONE EXTENSION

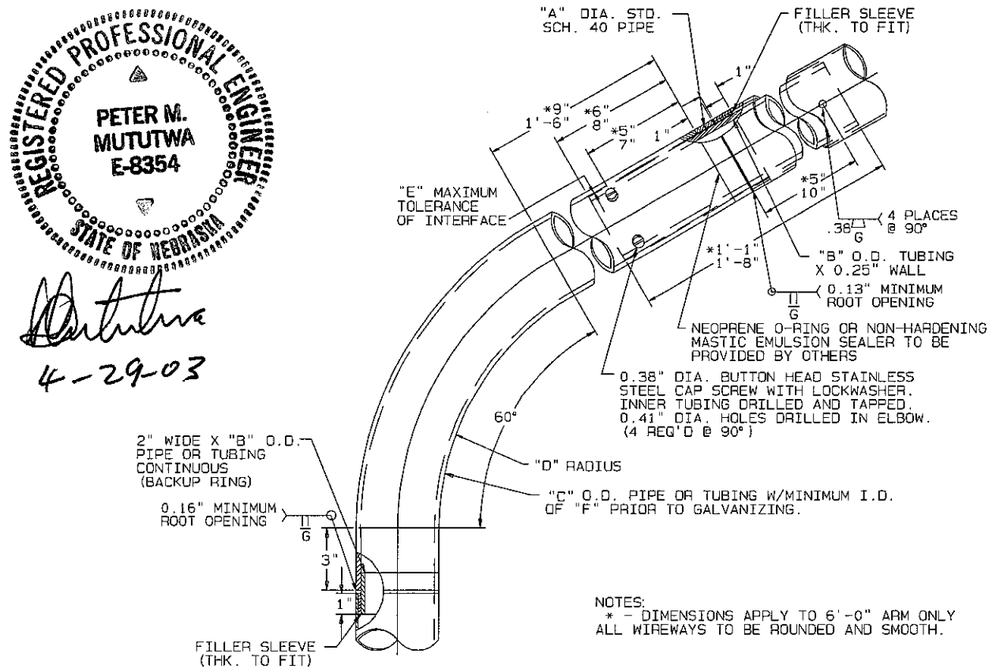

NOTES:
* - DIMENSIONS APPLY TO 6'-0" ARM ONLY
ALL WIREWAYS TO BE ROUNDED AND SMOOTH.

ARM SCHEDULE						
ARM LENGTHS	"A"	"B"	"C"	"D"	"E"	"F"
6'-0" THRU 10'-0"	3.50"	3.50"	4.00"	1'-0"	0.031"	3.537"
12'-0" THRU 16'-0"	4.00"	4.00"	4.50"	1'-3"	0.015"	4.035"

DETAIL 11 | ELBOW TYPE ARM ATTACHMENT

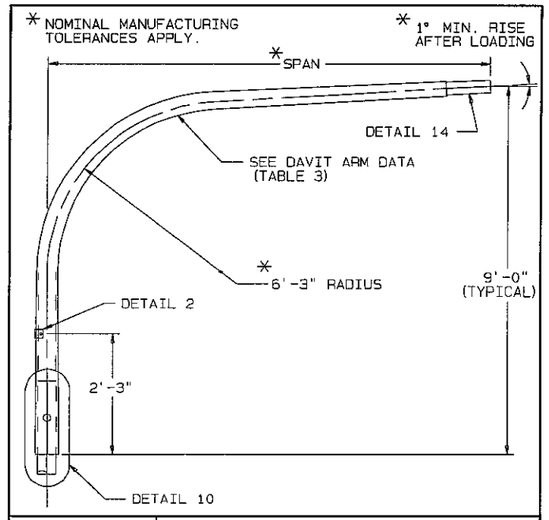

DETAIL 13 | DAVIT TYPE LUMINAIRE ARM

TABLE 3: DAVIT TYPE LUMINAIRE ARM DATA				
SPAN (FT)	BASE O.D. (IN)	FREE END (IN)	LONG (FT)	GAUGE
6	5.41	3.77	11.66	11
8	5.41	3.52	13.50	11
10	5.41	3.26	15.33	11
12	5.41	3.00	17.16	11
14	5.41	2.75	19.00	11
16	5.41	2.40	21.50	11

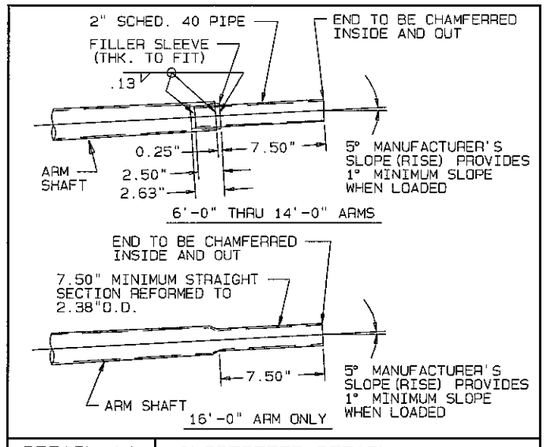

DETAIL 14 | SLIPFITTER DETAIL

NOTE: MATING SURFACES SHALL BE SMOOTH AND FREE OF BURRS, DENTS OR LUMPS OF ZINC.

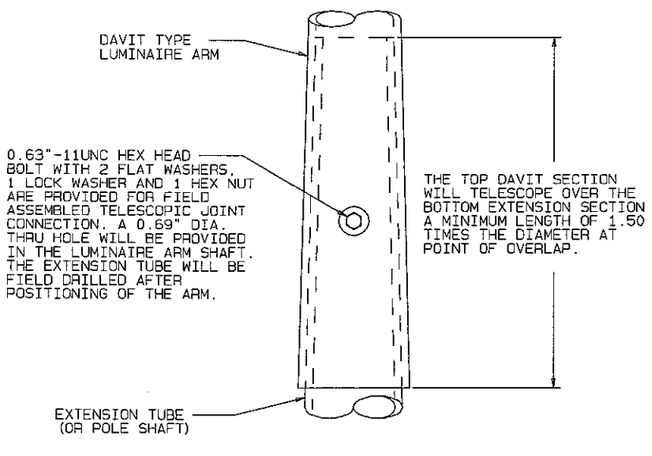

DETAIL 10 | DAVIT TYPE TELESCOPIC JOINT

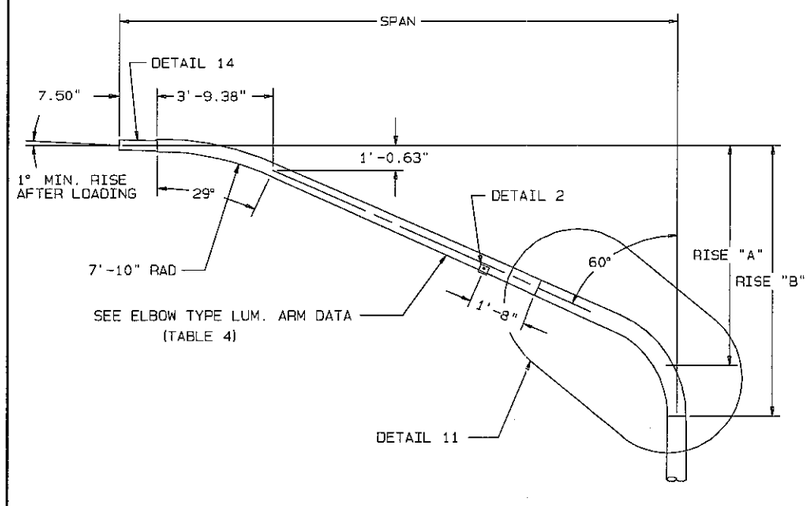

DETAIL 12 | ELBOW TYPE LUMINAIRE ARM

TABLE 4: ELBOW TYPE LUMINAIRE ARM DATA		
SPAN	RISE	
	"A"	"B"
6'-0"	1'-11.75"	2'-10"
8'-0"	3'-1.50"	4'-0"
10'-0"	4'-3.38"	5'-1"
12'-0"	5'-5.25"	6'-5"
14'-0"	6'-7.13"	7'-7"
*14'-0"	4'-1.13"	5'-1"
16'-0"	7'-9"	8'-9"
*16'-0"	5'-4"	6'-4"

* FOR 30'-0" MOUNTING HEIGHT

REV.	DATE	REVISION

VALMONT.
VALMONT INDUSTRIES, INC.
VALLEY, NEBRASKA 68064
(402) 359-2201

DATE: 05/08/02 | DRAWN: JKC | JKC 05/10/02
ORDER NO. | SHEET OF | SHEET 3 OF 3 | REV.
TITLE: STATE OF WASHINGTON
TRAFFIC SIGNAL STRUCTURES
DRAWING NO. DB00625 | D

REGISTERED PROFESSIONAL ENGINEER
PETER M. MUTUTWA
E-8354
STATE OF NEBRASKA
4-29-03