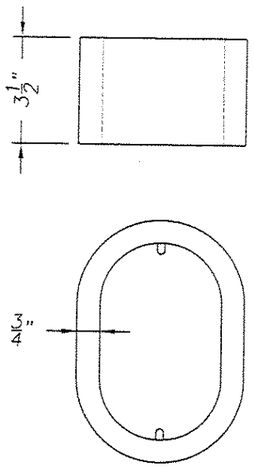

HANDHOLE BAR DETAIL

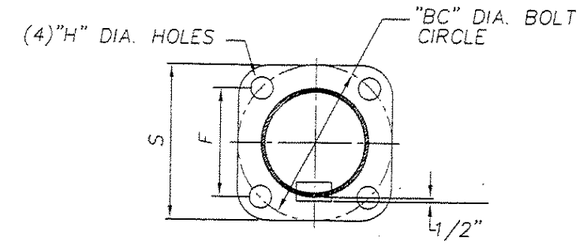

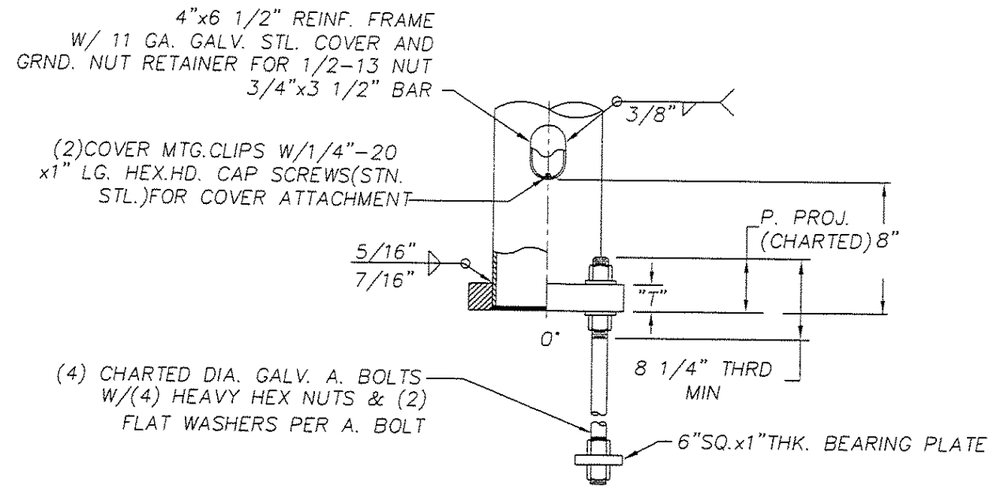

SINGLE PLY BASE & HANDHOLE DETAIL

U.M. DESIGN NUMBER	BASE PLATE DATA						
	"BC"	S	F	"H"	"T"	A.BOLT SIZE	P. PROJ.
71026-B87-Y1	18"	18 1/2"	12 3/4"	1 3/4"	1 1/2"	1 1/2" x 60"	6 1/4"
71026-B87-Y2							
71026-B87-Y3							
71026-B87-Y4							
71026-B87-Y5							
71026-B87-Y6							
71026-B87-Y7							
71026-B87-Y8	22"	23"	15 1/2"	2 1/4"	2"	2" x 60"	8 1/4"
71026-B87-Y9							
71026-B87-Y10							
71026-B87-Y11							

APPROVED
Manufacturer's Pole Plan
Approved For Listing As A
Pre-Approved Drawing
WSDOT Bridge & Structures Office
By GBo Date 1/20/2004

STATE OF OREGON
12-29-03
PAUL E. HAUG
041183
Paul E Haug

REVISIONS

TYPE III STEEL COMBINATION TRAFFIC & STREET LIGHTING POLES, TYPE 1 LUM. ARM
STATE OF WASHINGTON DOT

LOF ---- ENG.REF.# ----
REQ.# 0873-07-1 S.O.# --- CAD# ----

Union Metal CORPORATION

R4

DRAWN LCV
DATE 3/4/03
CHECKED EBL

DRAWING NO. 71026-B87
SHT 3 OF 3

ORIGINAL