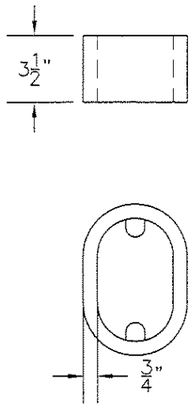

HANDHOLE BAR DETAIL

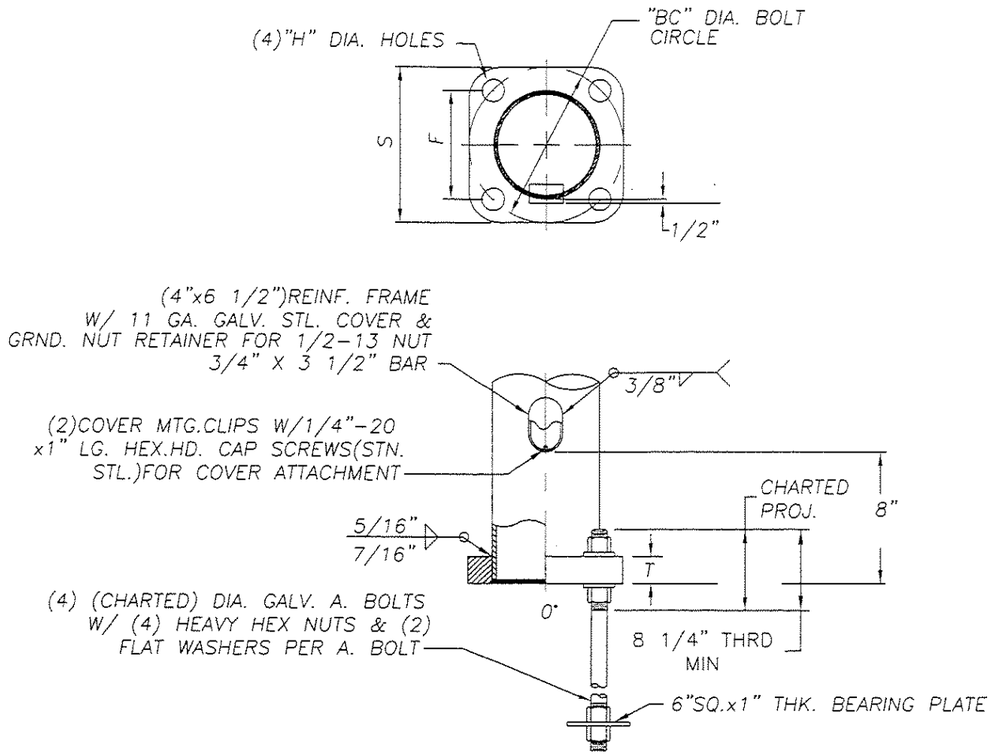

SINGLE PLY BASE & HANDHOLE DETAIL

U.M. DESIGN NUMBER	BASE PLATE DATA						
	"BC"	S	F	"H"	"T"	A.BOLT SIZE	PROJ.
71026-B86-Y1	18"	18 1/2"	12 3/4"	1 3/4"	1 1/2"	1 1/2"x60"	6 1/4"
71026-B86-Y2							
71026-B86-Y3							
71026-B86-Y4							
71026-B86-Y5							
71026-B86-Y6							
71026-B86-Y7							
71026-B86-Y8	22"	23"	15 1/2"	2 1/4"	2"	2"x60"	8 1/4"
71026-B86-Y9							
71026-B86-Y10							
71026-B86-Y11							

STATE OF OHIO
JOHN M. FRITZ
E-62406
REGISTERED
PROFESSIONAL ENGINEER

APPROVED
Manufacturer's Pole Plan
Approved For Listing As A
Pre-Approved Drawing
WSDOT Bridge & Structures Office
By GB Date 1/20/2004

REVISIONS

TYPE II STEEL TRAFFIC POLE
FOR
SATE OF WASHINGTON DOT

LOF ---- ENG.REF.# 71026-B34
REQ.# 0873-07-1 S.O.# ---- CAD# ----

Union Metal CORPORATION

R04

DRAWN LCV
DATE 2/12/03
CHECKED EBL

DRAWING NO.
71026-B86
SHEET 3 OF 3

ORIGINAL