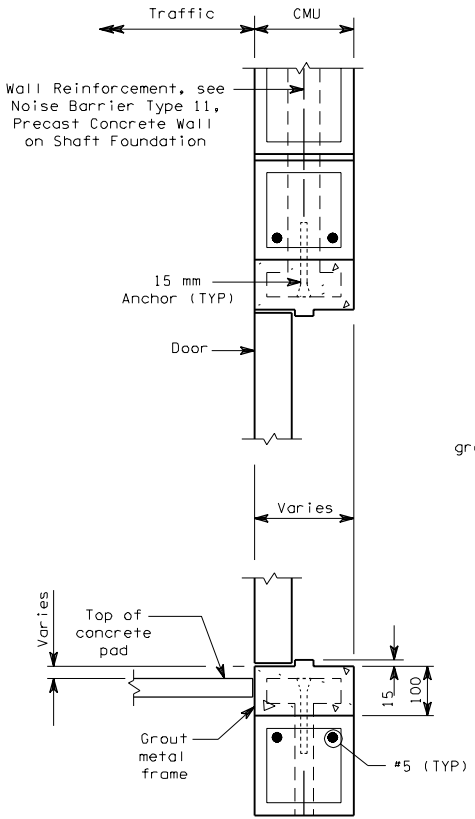

SECTION A-A

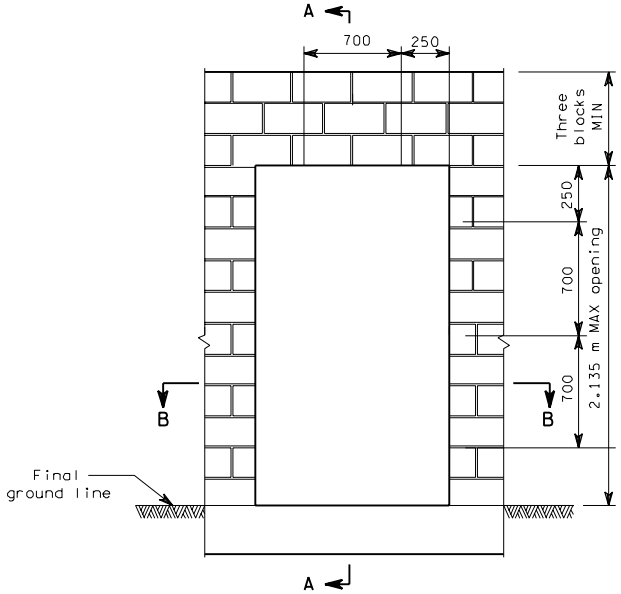

ELEVATION

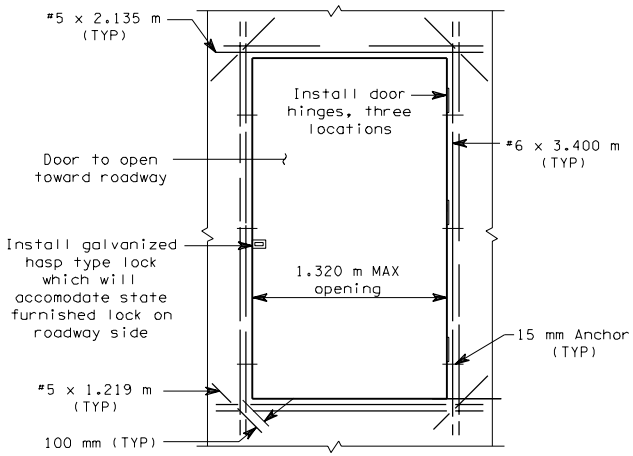

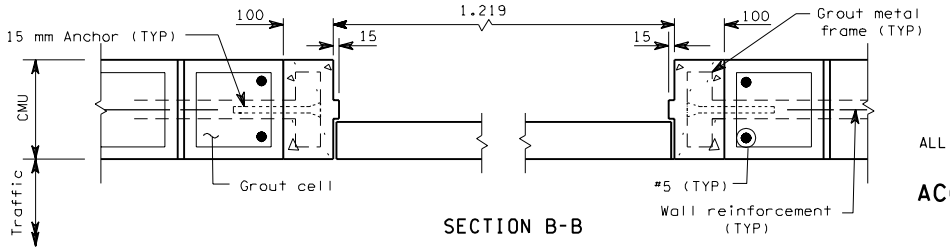

SECTION B-B

ALL DIMENSIONS ARE IN MILLIMETERS UNLESS OTHERWISE NOTED

ACCESS DOOR - TYPE 3
MASONRY WALL ON SHAFT FOUNDATION

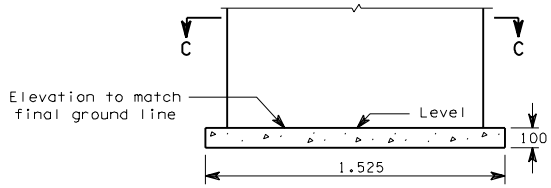

CONCRETE PAD

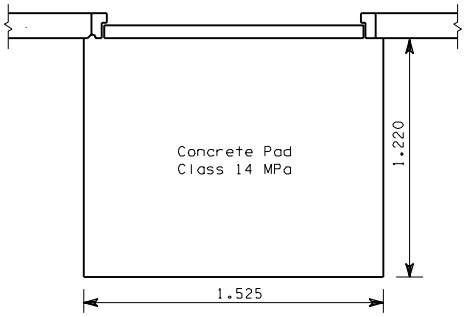

VIEW C

STANDARD PLAN D-2w

APPROVED FOR PUBLICATION

STATE DESIGN ENGINEER DATE

WASHINGTON STATE DEPARTMENT OF TRANSPORTATION
OLYMPIA, WASHINGTON