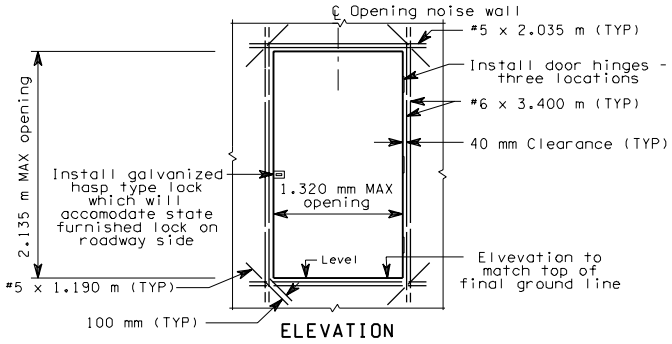

ELEVATION

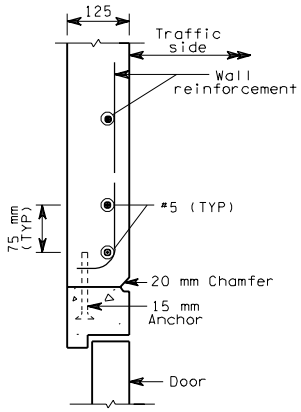

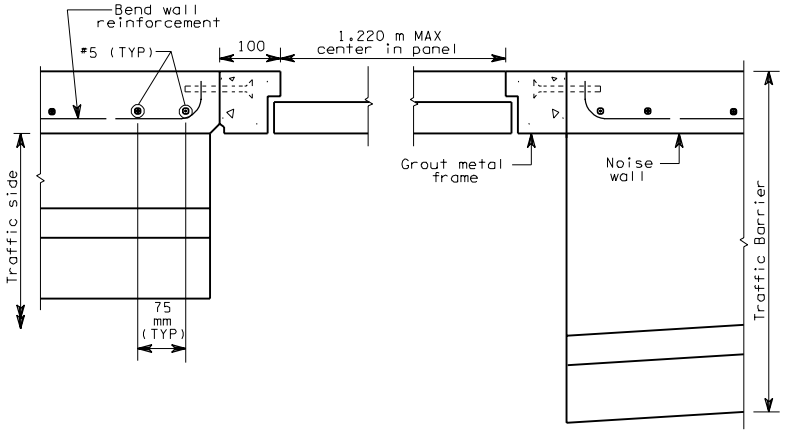

SECTION B-B

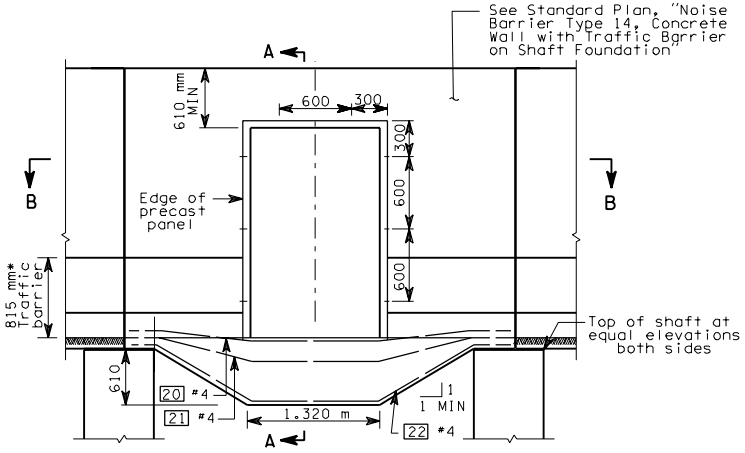

BOTTOM OF WALL DETAIL

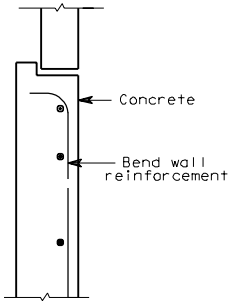

SECTION A-A

ALL DIMENSIONS ARE IN MILLIMETERS UNLESS OTHERWISE NOTED

ACCESS DOOR - TYPE 2
PRECAST CONCRETE WALL WITH TRAFFIC BARRIER ON SHAFT FOUNDATION

MK NUMBER	BAR SIZE	BEND TYPE	NUMBER PER DOOR	X (mm)	Y (mm)	Z (mm)	H (mm)	J (mm)	TOTAL LENGTH (m)
20	4	91	1	330	890	1.295	205	430	3.450
21	4	91	1	280	940	1.295	415	405	3.575
22	4	91	1	260	960	1.295	610	380	3.685

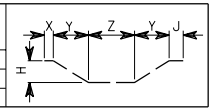

STANDARD PLAN D-2v

APPROVED FOR PUBLICATION

STATE DESIGN ENGINEER DATE

WASHINGTON STATE DEPARTMENT OF TRANSPORTATION
OLYMPIA, WASHINGTON