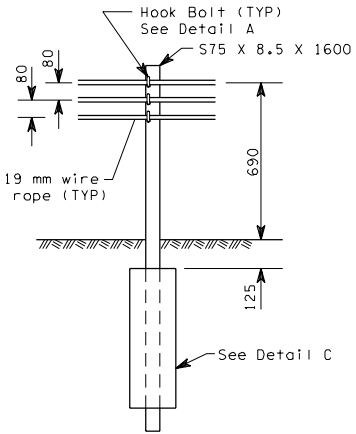

TYPE 1

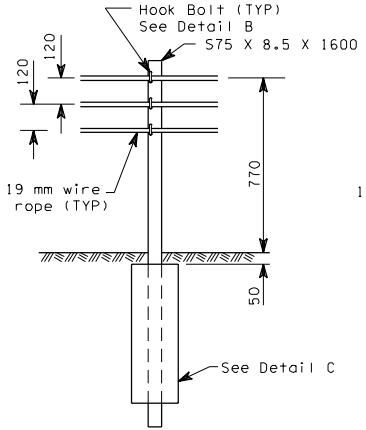

TYPE 2

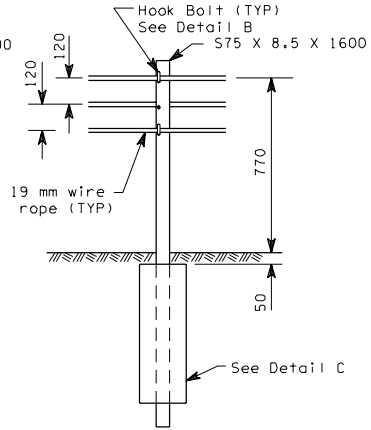

TYPE 3

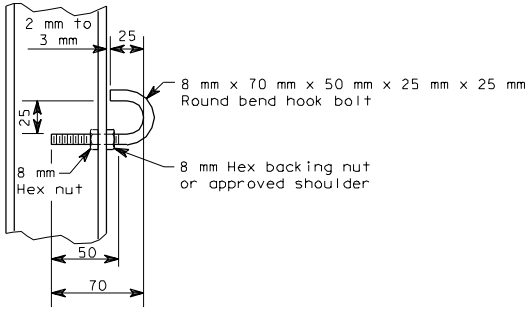

HOOK BOLT

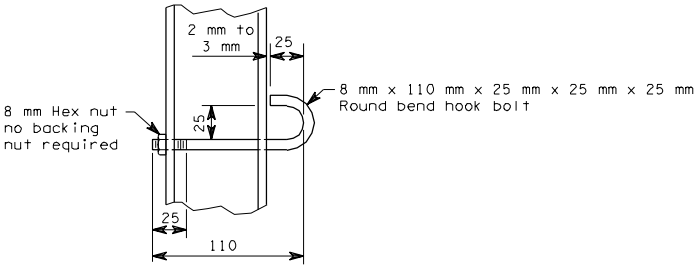

ALTERNATE HOOK BOLT

ALL DIMENSIONS ARE IN MILLIMETERS UNLESS OTHERWISE NOTED

CABLE BARRIER

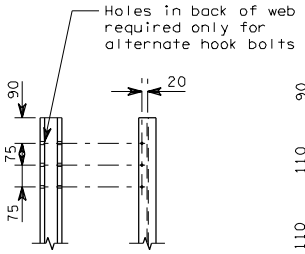

DETAIL A

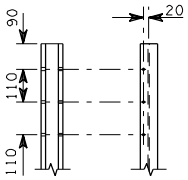

DETAIL B

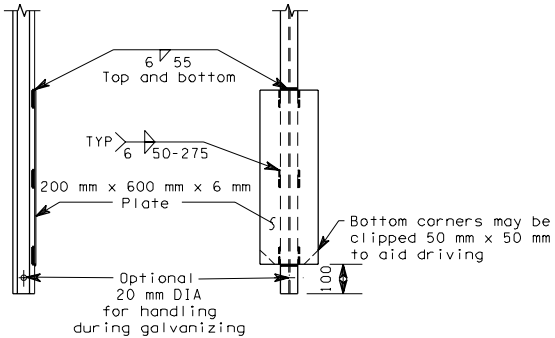

DETAIL C

STANDARD PLAN C-11

APPROVED FOR PUBLICATION

STATE DESIGN ENGINEER DATE

WASHINGTON STATE DEPARTMENT OF TRANSPORTATION
OLYMPIA, WASHINGTON