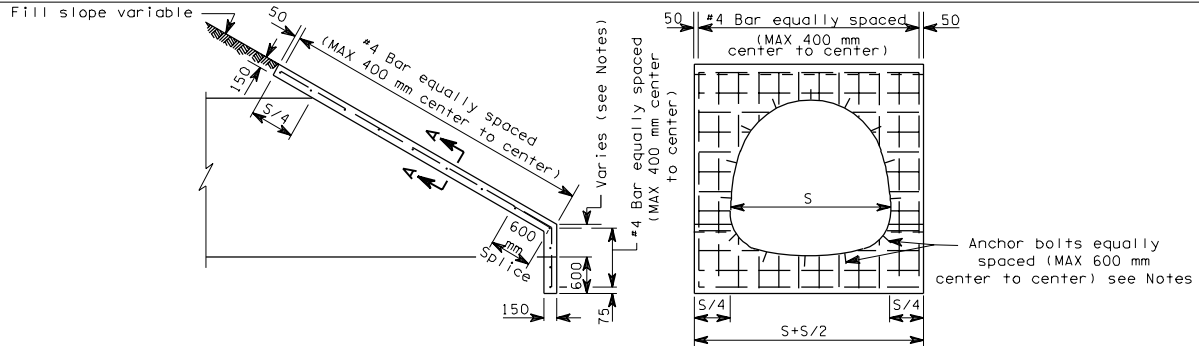

STRUCTURAL PLATE PIPE ARCHES AND UNDERPASSES

NOTES

1. The variable dimension indicated for the height of step for step mitered pipes shall conform to manufacturers recommendations unless specified differently on the plans or in the special provisions.
2. Reinforcing steel shall have 40 mm clear cover to all concrete surfaces.
3. Headwalls for concrete culvert pipe may omit anchor bolt attachment.
4. When steel pipe safety bars ar used, headwall thickness shall be increased to 200 mm.

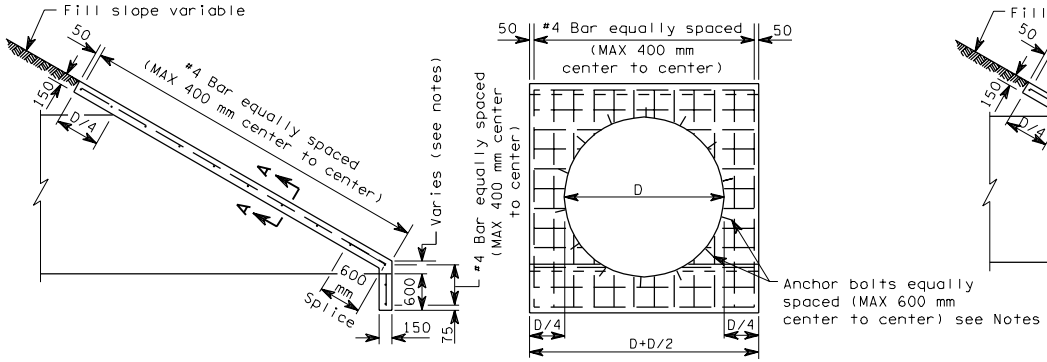

STEP MITERED PIPE

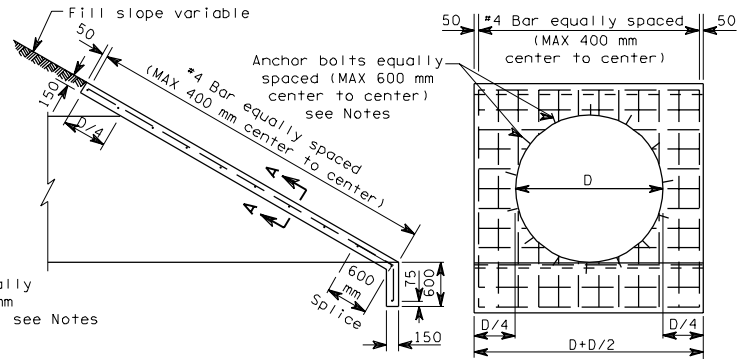

FULL MITERED PIPE

PIPES AND STRUCTURAL PLATE PIPES

ALL DIMENSIONS ARE IN MILLIMETERS UNLESS OTHERWISE NOTED

HEADWALLS FOR CULVERT PIPES

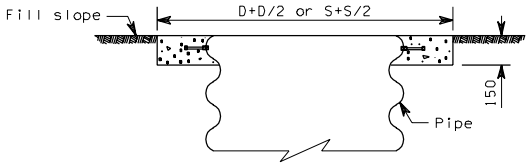

SECTION A-A

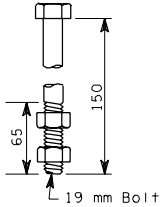

ANCHOR BOLT DETAILS

STANDARD PLAN B-9

APPROVED FOR PUBLICATION

STATE DESIGN ENGINEER DATE

WASHINGTON STATE DEPARTMENT OF TRANSPORTATION
OLYMPIA, WASHINGTON