NOTES:

1. Steel tie rods to be heavily coated wtih asphalt after installation.

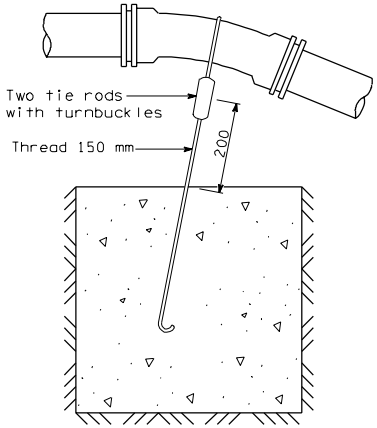

BLOCKING FOR 11.25° OR 22.5° VERTICAL BENDS

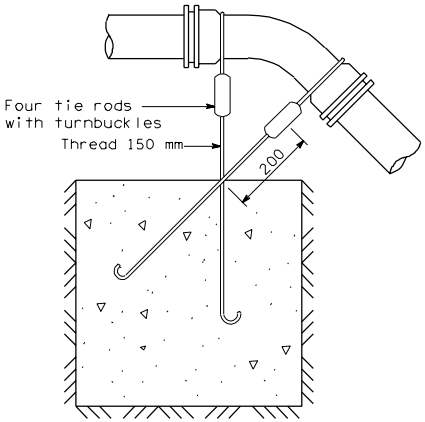

BLOCKING FOR 45° VERTICAL BENDS

DIMENSION TABLE						
PIPE DIA	TEST PRESSURE kPa	BEND ANGLE	CONCRETE VOLUME m^3	CUBE SIZE m	TIE ROD DIA	TIE ROD EMBEDMENT
100	1724	11.25°	0.16	0.54	16	430
		22.5°	0.33	0.69		
		45°	0.59	0.84		
150	1724	11.25°	0.37	0.72	16	430
		22.5°	0.73	0.90		
		45°	1.37	1.11		
200	1724	11.25°	0.66	0.87	16	430
		22.5°	1.26	1.08		
		45°	2.46	1.35		
250	1724	11.25°	1.06	1.02	16	430
		22.5°	2.00	1.26		
		45°	3.80	1.26		
300	1724	11.25°	1.48	1.14	16	430
		22.5°	2.99	1.44		
		45°	5.27	1.74	22	610
350	1724	11.25°	2.00	1.26	16	430
		22.5°	4.02	1.59	19	510
		45°	7.42	1.95	25	690
400	1724	11.25°	2.63	1.38	16	430
		22.5°	5.27	1.74	22	610
		45°	9.66	2.13	29	690

ALL DIMENSIONS ARE IN MILLIMETERS UNLESS OTHERWISE NOTED

CONCRETE BLOCKING FOR CONVEX VERTICAL BENDS

STANDARD PLAN B-22

APPROVED FOR PUBLICATION

STATE DESIGN ENGINEER DATE

WASHINGTON STATE DEPARTMENT OF TRANSPORTATION
OLYMPIA, WASHINGTON