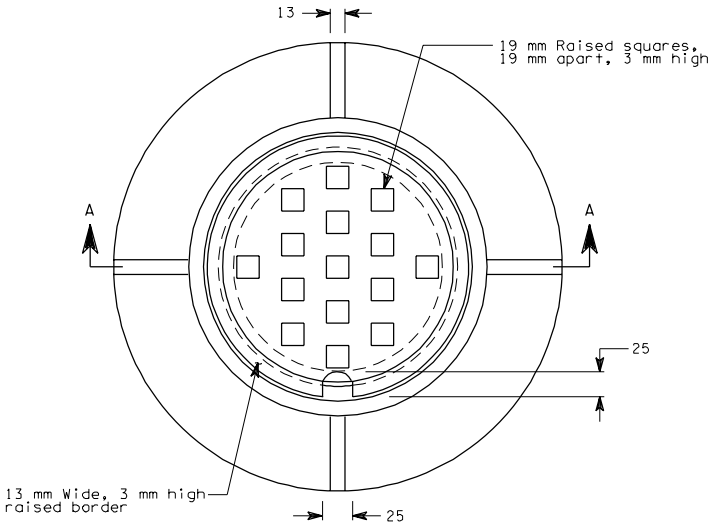

PLAN

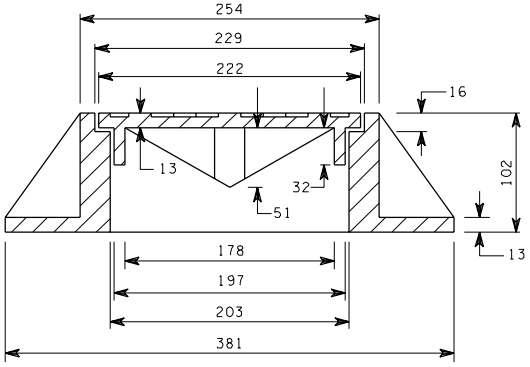

SECTION A-A

CAST IRON RING AND COVER

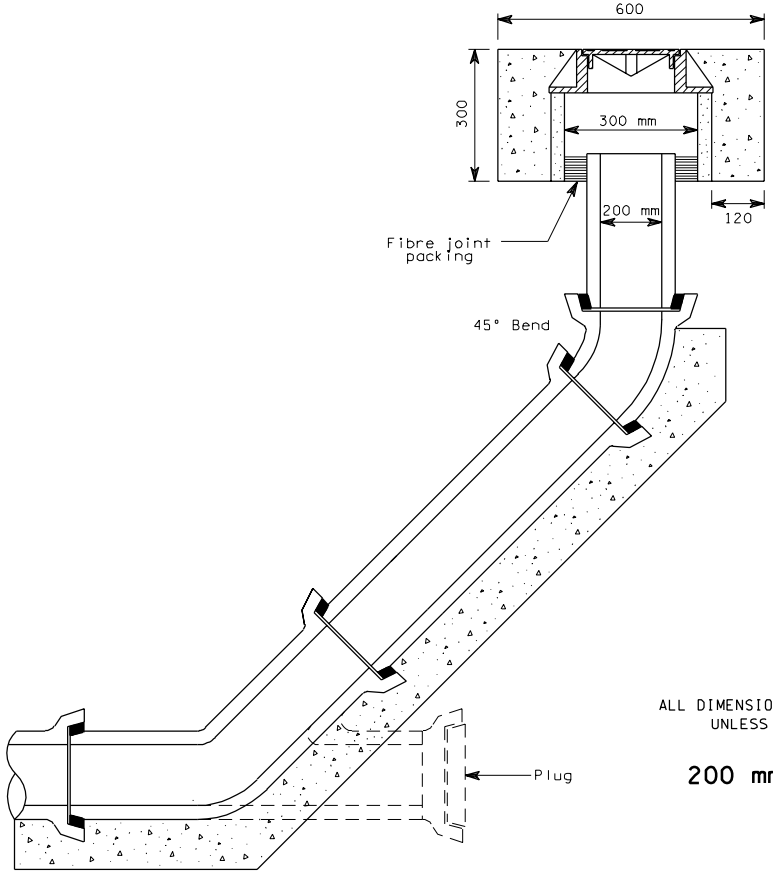

ALL DIMENSIONS ARE IN MILLIMETERS
UNLESS OTHERWISE NOTED

200 mm CLEAN-OUT

STANDARD PLAN B-18b

APPROVED FOR PUBLICATION

STATE DESIGN ENGINEER DATE

WASHINGTON STATE DEPARTMENT OF TRANSPORTATION
OLYMPIA, WASHINGTON