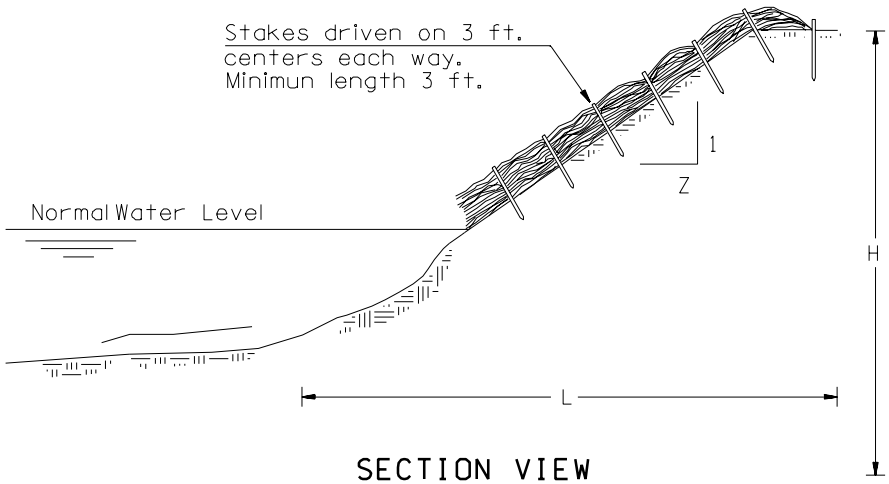

SECTION VIEW

NTS

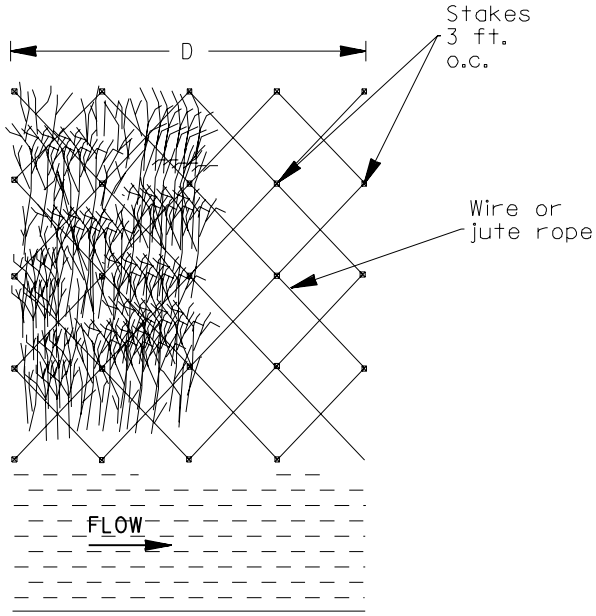

PLAN VIEW

NTS

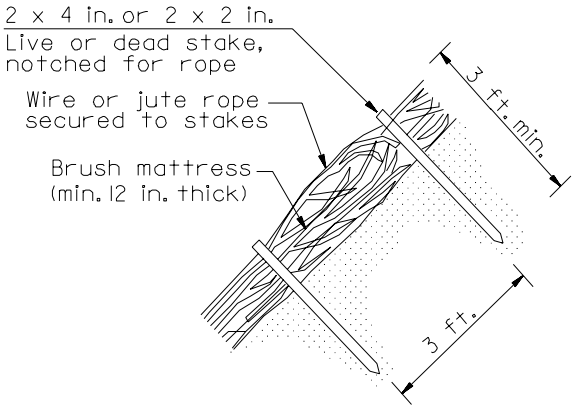

DETAIL

NTS

DIMENSIONS:

River Bank	Live Branches
D = _____ ft.	Species _____
H = _____ ft.	Dia _____ inches
L = _____ ft.	Length _____ ft.
Z = _____	

BIOENGINEERING STREAMBANK PROTECTION
BRUSH MATTRESS

U.S. DEPARTMENT OF AGRICULTURE SOIL CONSERVATION SERVICE

		DATE
DESIGNED	ARS	6/94
DRAWN	MDH	6/94
TRACED		
CHECKED		

	DATE
APPROVED BY	
TITLE	
TITLE	

DRAWING NO. WA-SD-3809B

SHEET ___ OF ___