APPENDIX T-1

I-90 TUNNEL CENTRAL CONTROL SYSTEM

DIAGRAM

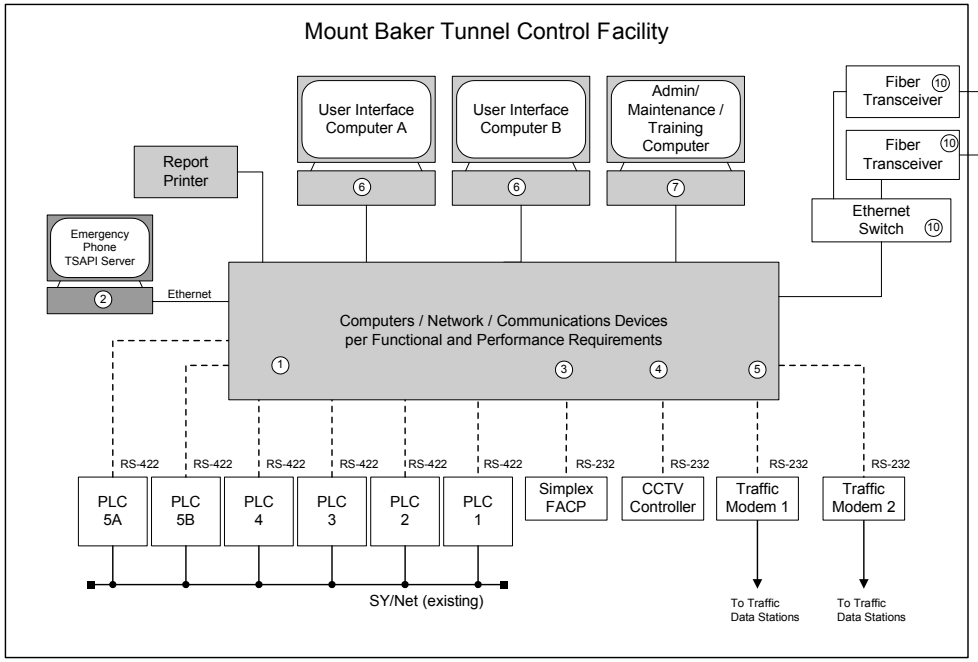

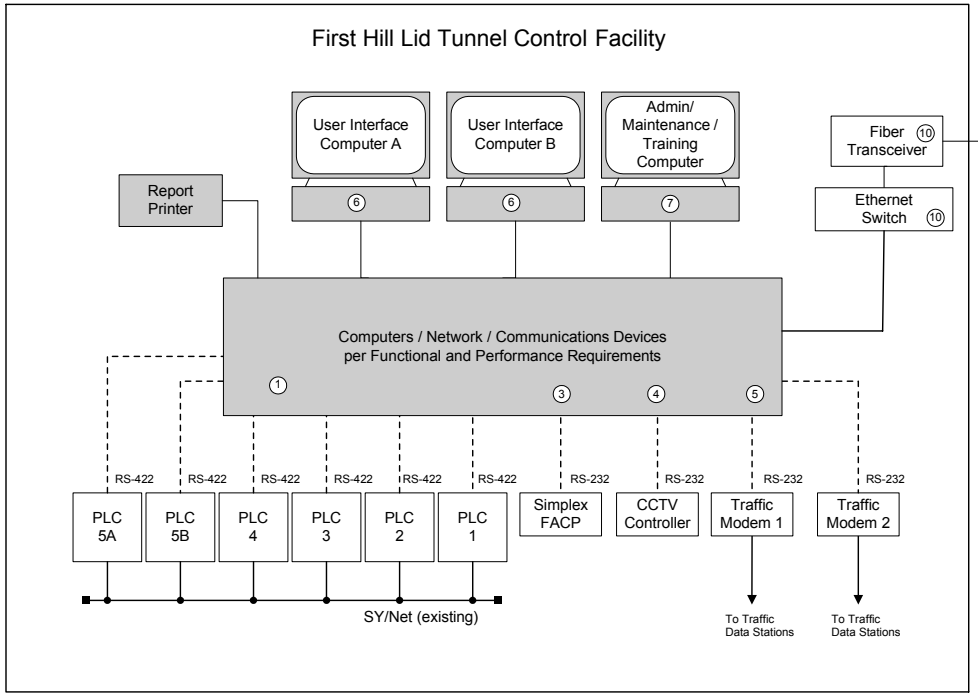

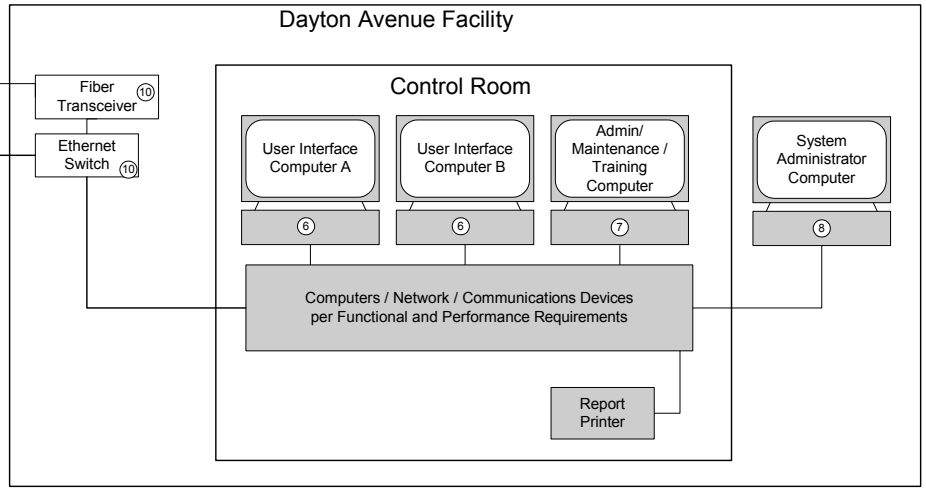

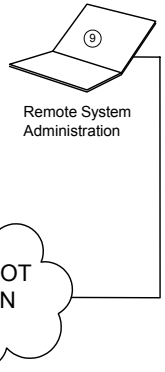

Legend

- Existing
- Supplied by TCCS Contract

Notes

1. The TCCS shall convert the Sy/Max RS-422 serial communication with each PLC to Modbus/TCP over Ethernet. Thus the TCCS shall be able to read and write directly to each PLC.
2. The phone system will be replaced under another contract during the tunnel computer system upgrade. The new phone system shall communicate using IP over Ethernet. All phone system data including First Hill Lid phones shall be collected at Mount Baker.
3. The TCCS shall convert the Simplex 4100 serial communication with the FACP to Modbus/TCP over Ethernet allowing the TCCS and PLC's to read and write to the FACP.
4. The CCTV camera controllers accept command string messages through RS-232 serial communication. The TCCS shall allow any user interface computer at any facility to control and switch the cameras.
5. Polling of the traffic data stations shall be managed by the TCCS. Each modem has an RS-232 serial connection to the TCCS and communicates with multiple traffic data stations.
6. All user interface computers shall have identical capability. Any single user interface computer at any of the three locations shall be capable of performing all control functions for either tunnel.
7. The Maintenance / Training Computers will normally be used by maintenance personnel to view the system. These computers are also capable of functioning as user interface computers for tunnel operators. In addition, these computers shall be used for control system simulation for training new operators.
8. The System Administrator Computer shall be for TCCS administration and for programming of the PLC's.
9. The TCCS shall provide secure dial-up access to the TCCS at each facility for remote administration. It shall be possible to access all computers, PLC's, and communication gateways through the dial-up connection.
10. The Ethernet switches and fiber transceivers are existing and part of the general WSDOT data network.

I-90 TCCS System Diagram

APPENDIX T-2

TUNNEL CENTRAL CONTROL SYSTEM (EXISTING)

FUNCTION DATA FLOWS

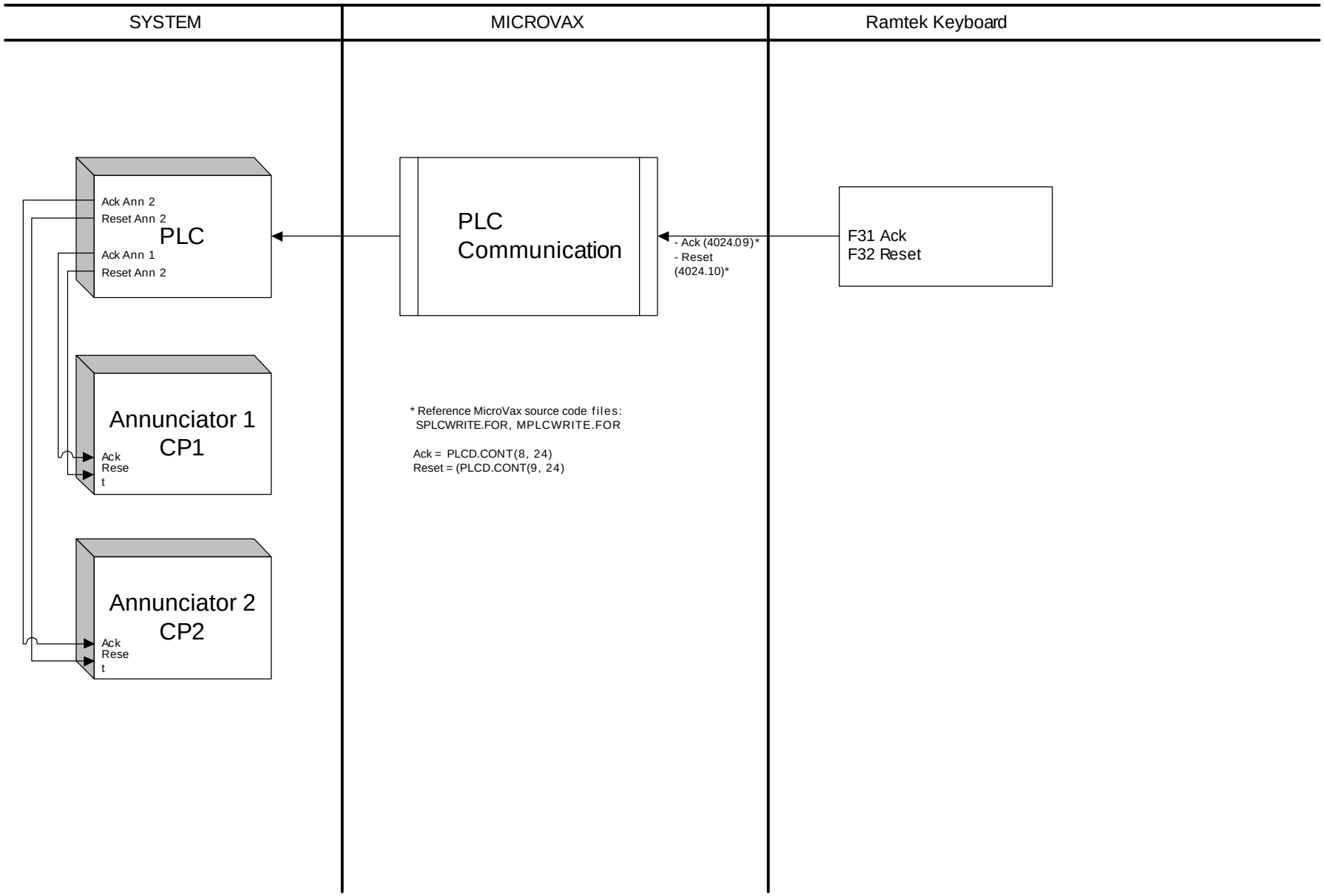

ACEx Technologies
VAX Upgrade Study
subtask 2C.vsd

Annunciator Diagram

The graphic screen annunciators and the actual annunciators are acknowledged through the keyboard.

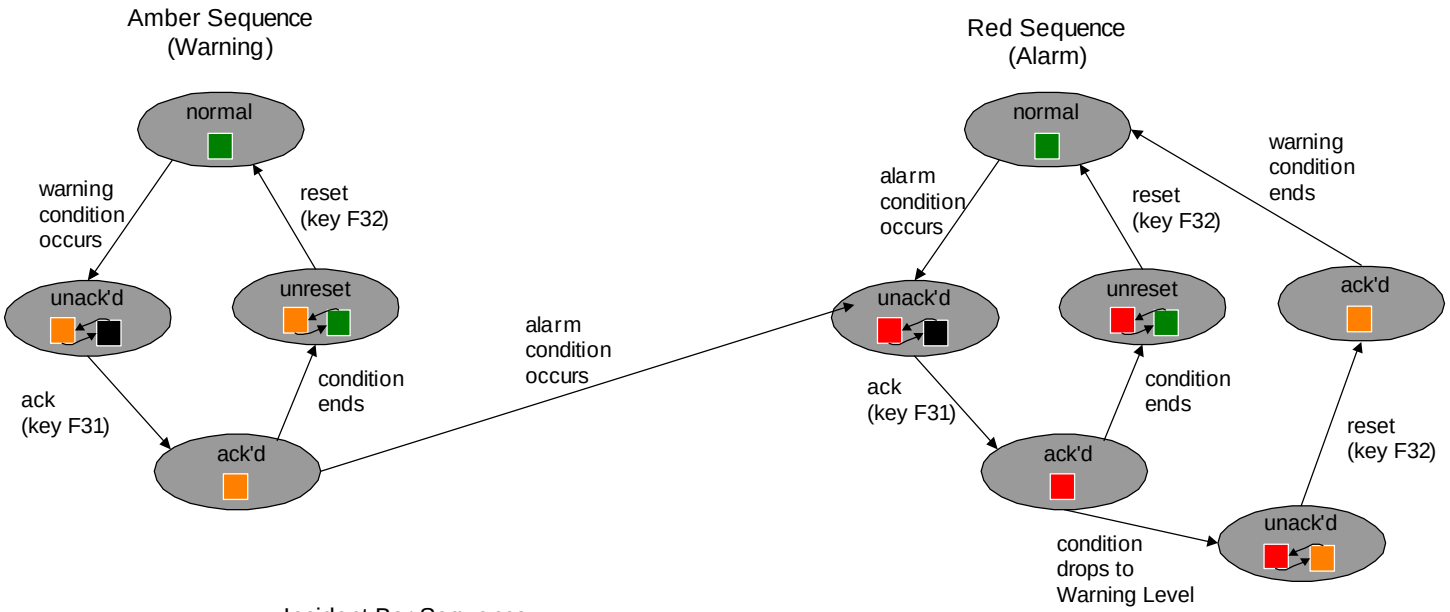

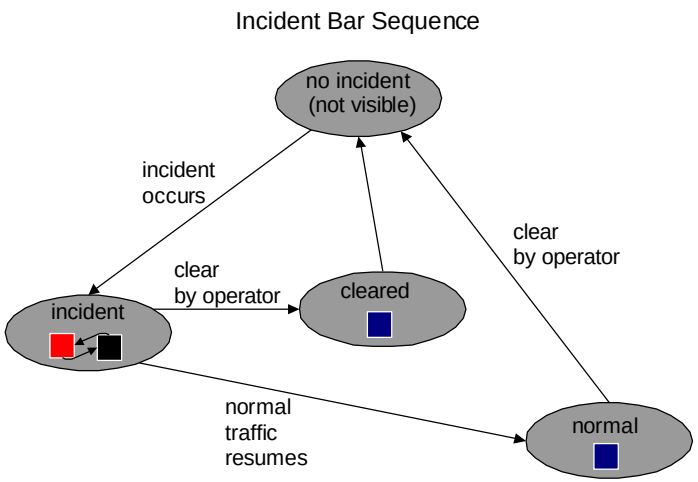

Traffic Bar Colors

VOL	OCC		SPD	
<1500	<	15	>	55
<1700	<	22	>	43
<2000	<	35	>	30
<2000	>	35	<	30

flashing

ACEx Technologies
VAX Upgrade Study
subtask 2C.vsd

Color Sequence Diagram

These state diagrams show the sequences of colors that various graphical elements go through. The amber and red color sequences are typical for the annunciator and many icons for alarm conditions.

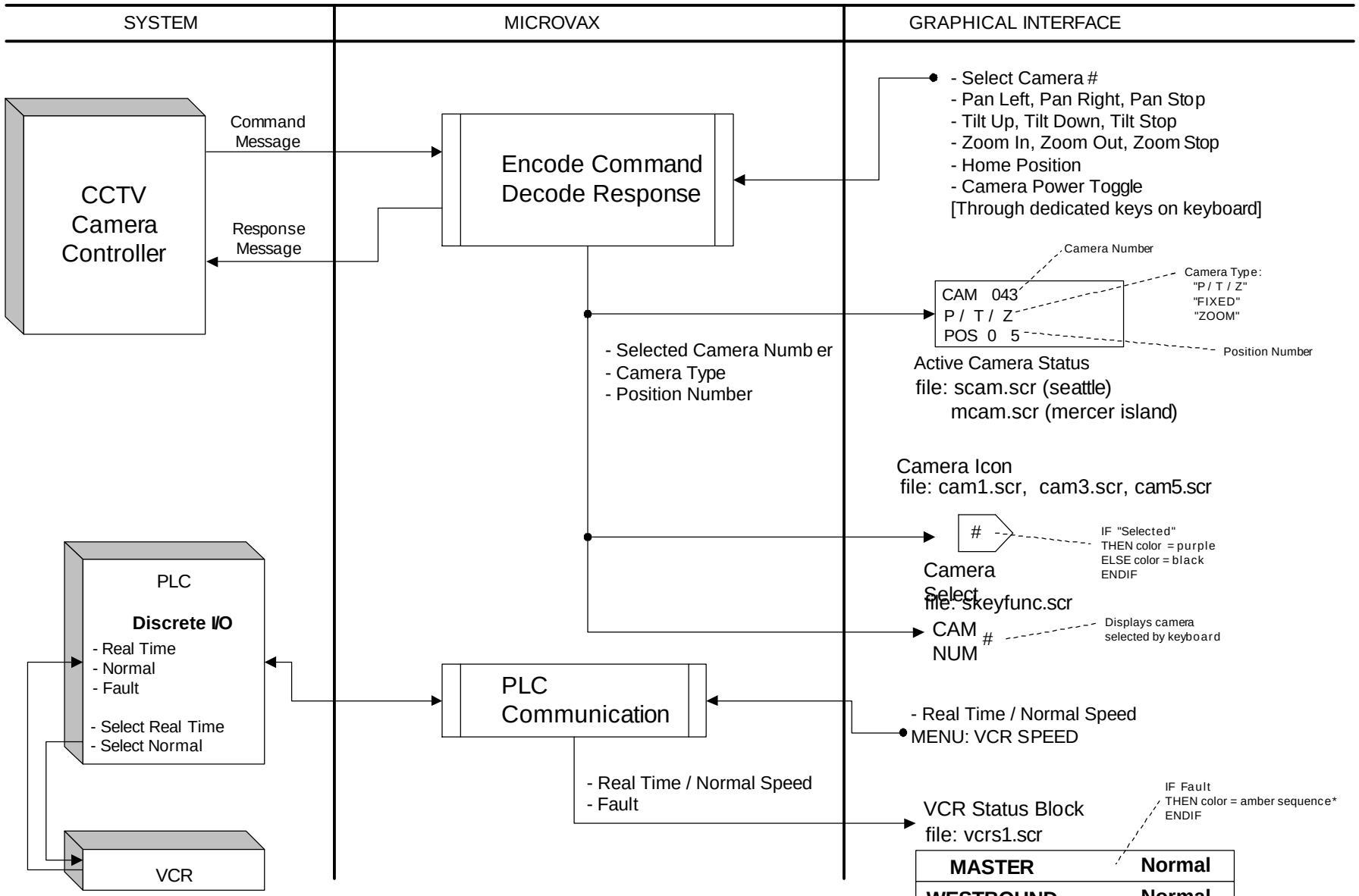

ACEx Technologies
VAX Upgrade Study
subtask 2C.vsd

Camera & VCR Diagram

Equipment Count:

Mt. Baker:	36 Cameras, 5 VCR's
Mercer Island:	33 Cameras, ? VCR's

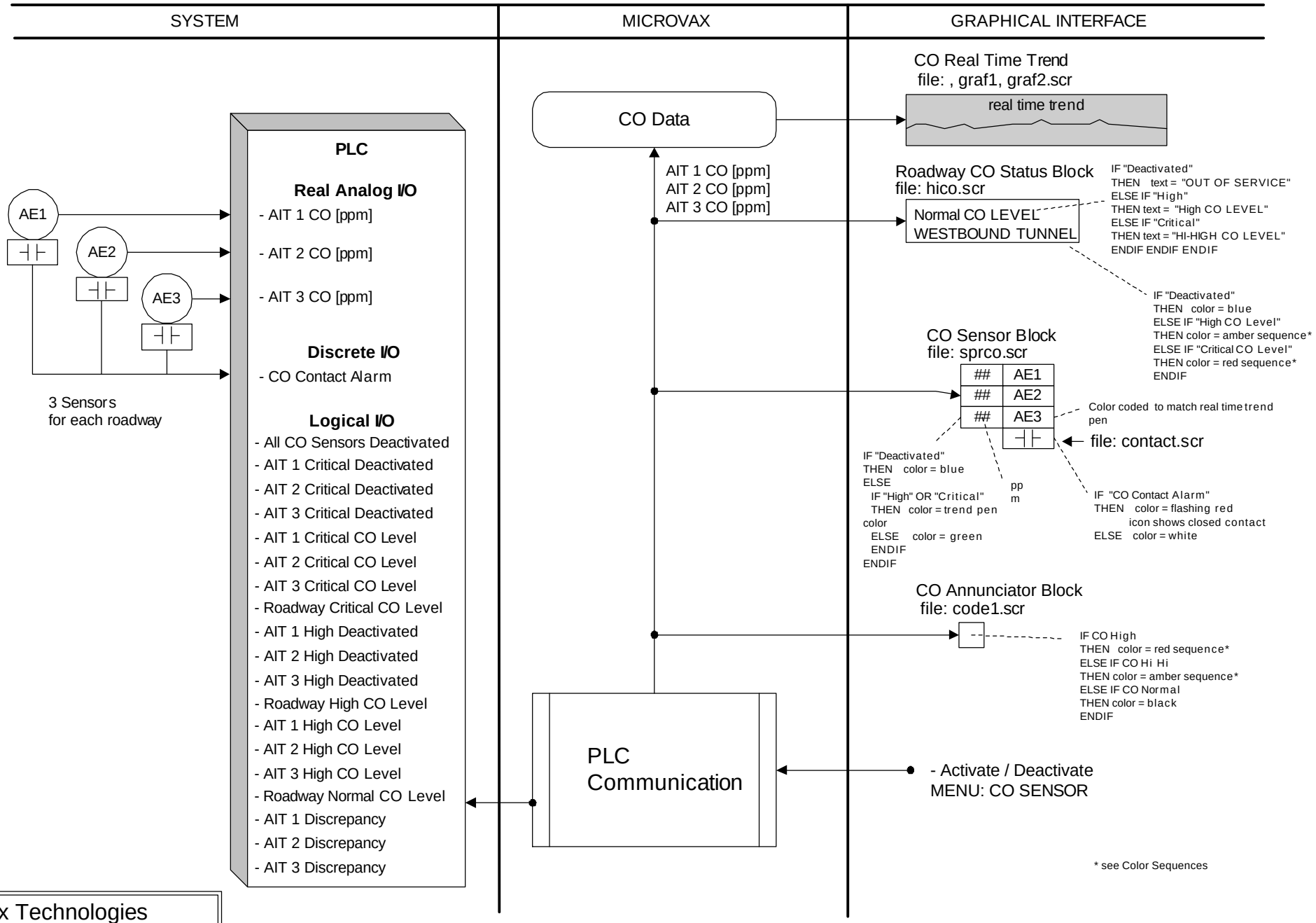

ACEx Technologies
VAX Upgrade Study
subtask 2C.vsd

Carbon Monoxide Diagram

Equipment Count:

Mt. Baker:	11 CO Sensors
Mercer Island:	10 CO Sensors

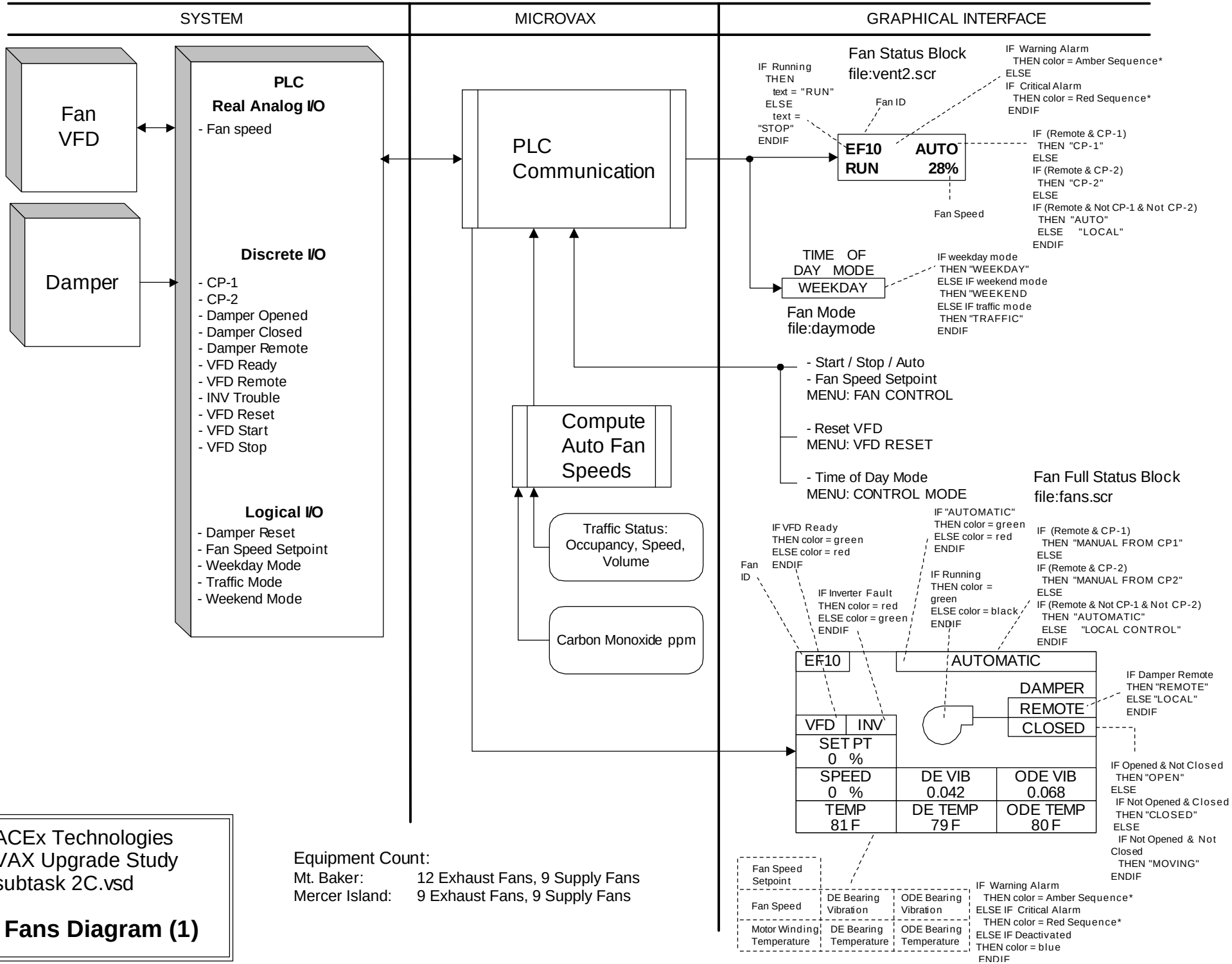

ACEx Technologies
VAX Upgrade Study
subtask 2C.vsd

Fans Diagram (1)

Equipment Count:

Mt. Baker:	12 Exhaust Fans, 9 Supply Fans
Mercer Island:	9 Exhaust Fans, 9 Supply Fans

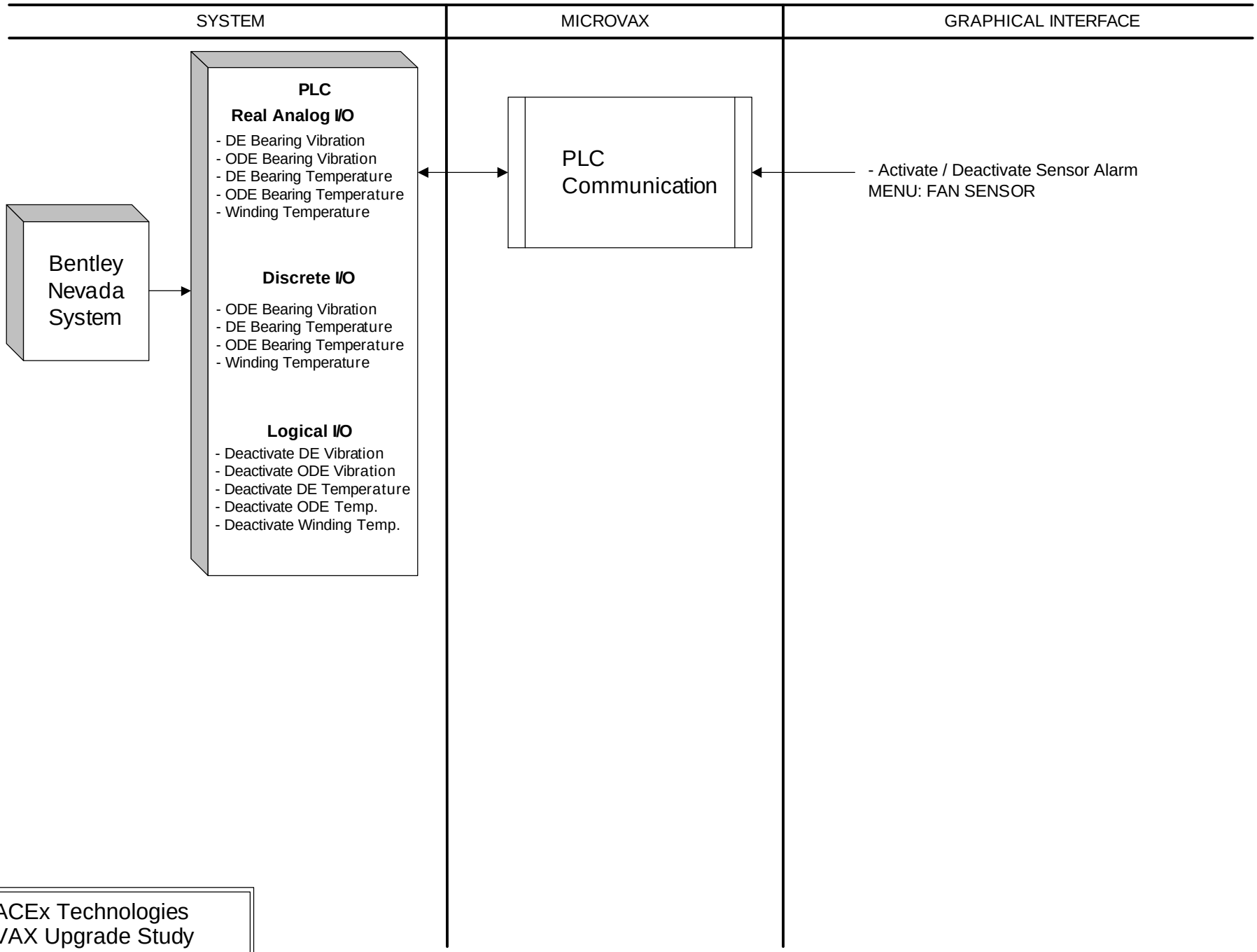

ACEx Technologies
VAX Upgrade Study
subtask 2C.vsd

Fans Diagram (2)

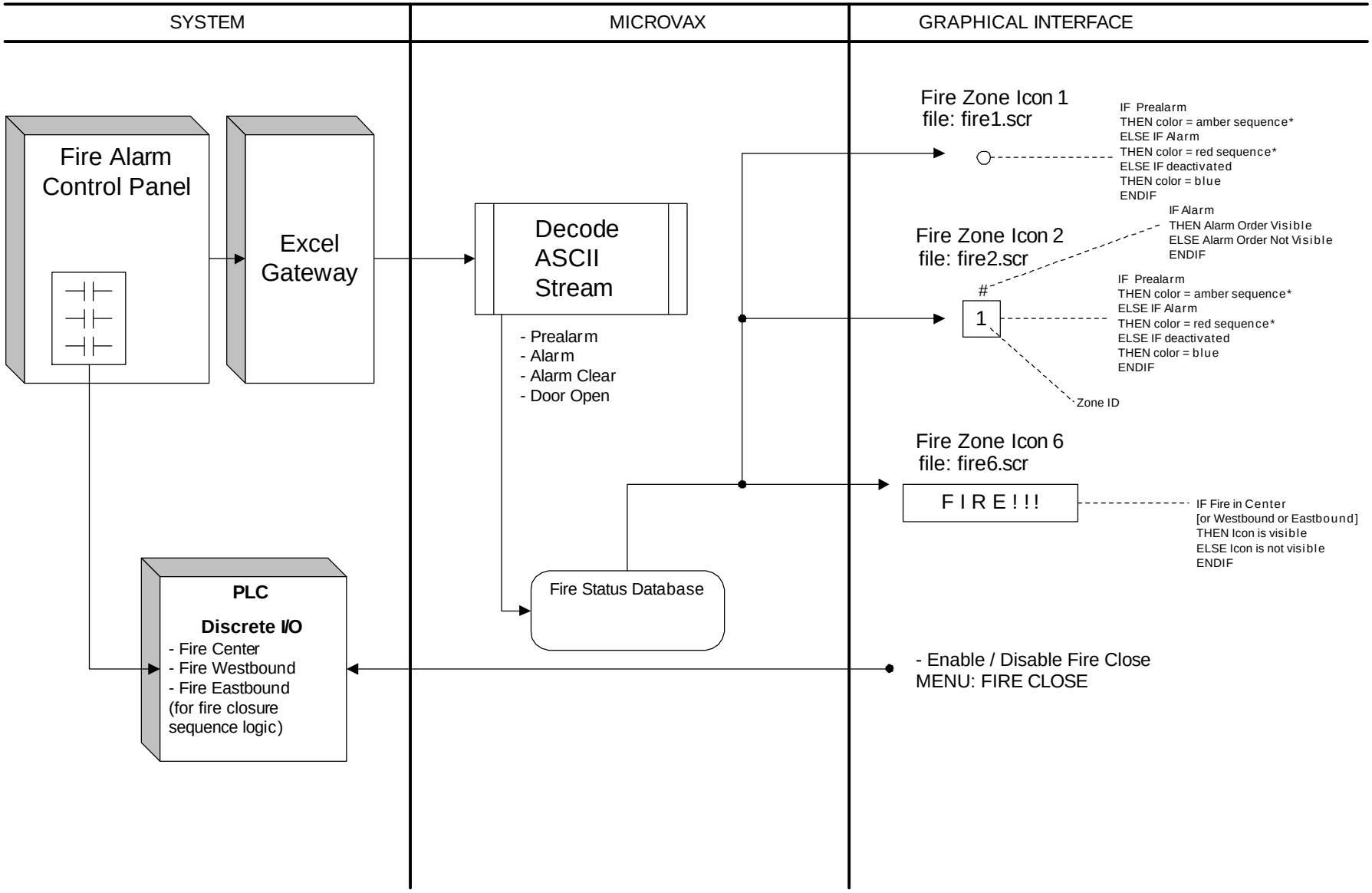

ACEx Technologies
VAX Upgrade Study
subtask 2C.vsd

Fire Diagram

Equipment Count:

Mt. Baker:	82 Fire Zones
Mercer Island:	55 Fire Zones

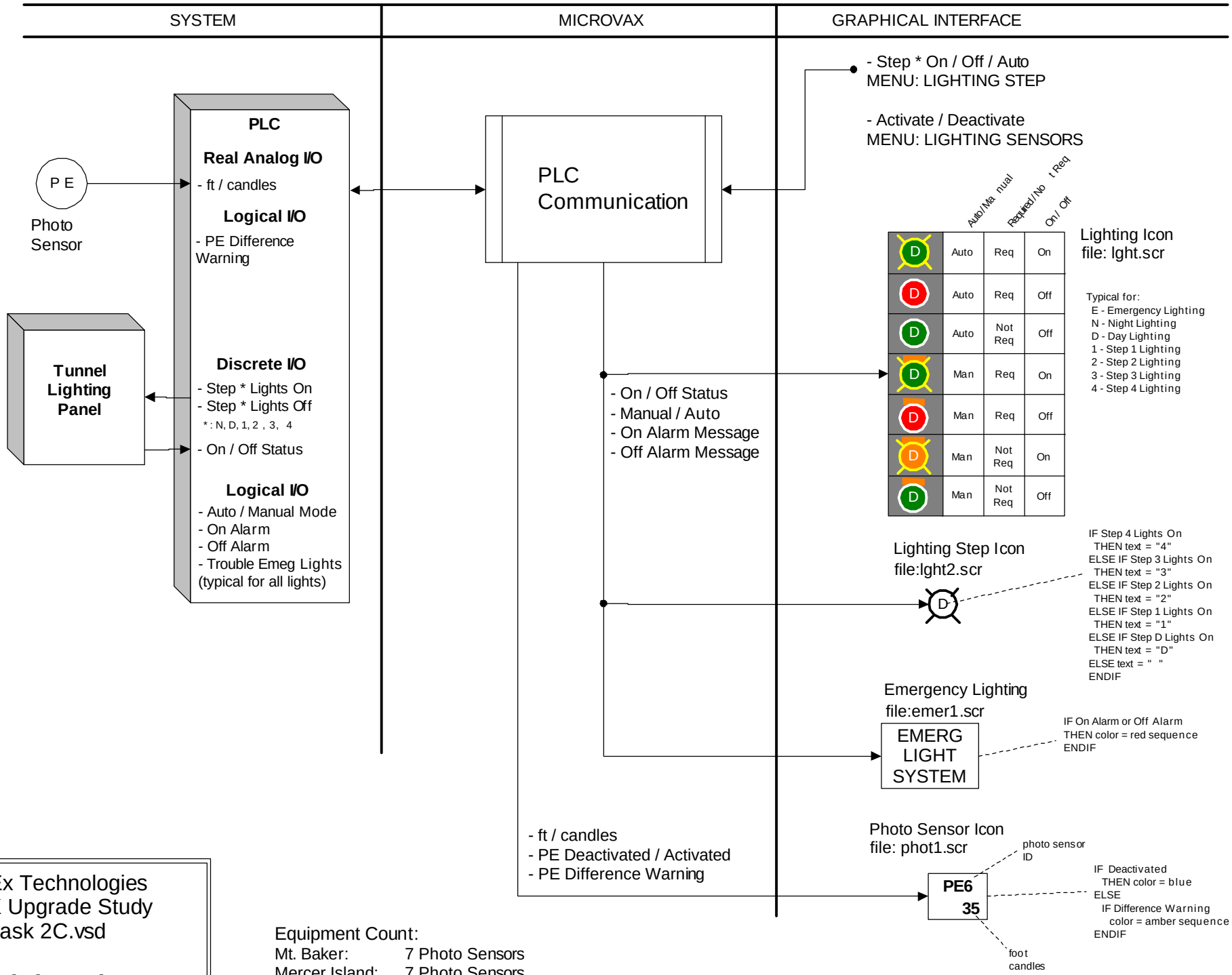

ACEx Technologies
VAX Upgrade Study
subtask 2C.vsd

Lighting Diagram

Equipment Count:

Mt. Baker:	7 Photo Sensors
Mercer Island:	7 Photo Sensors

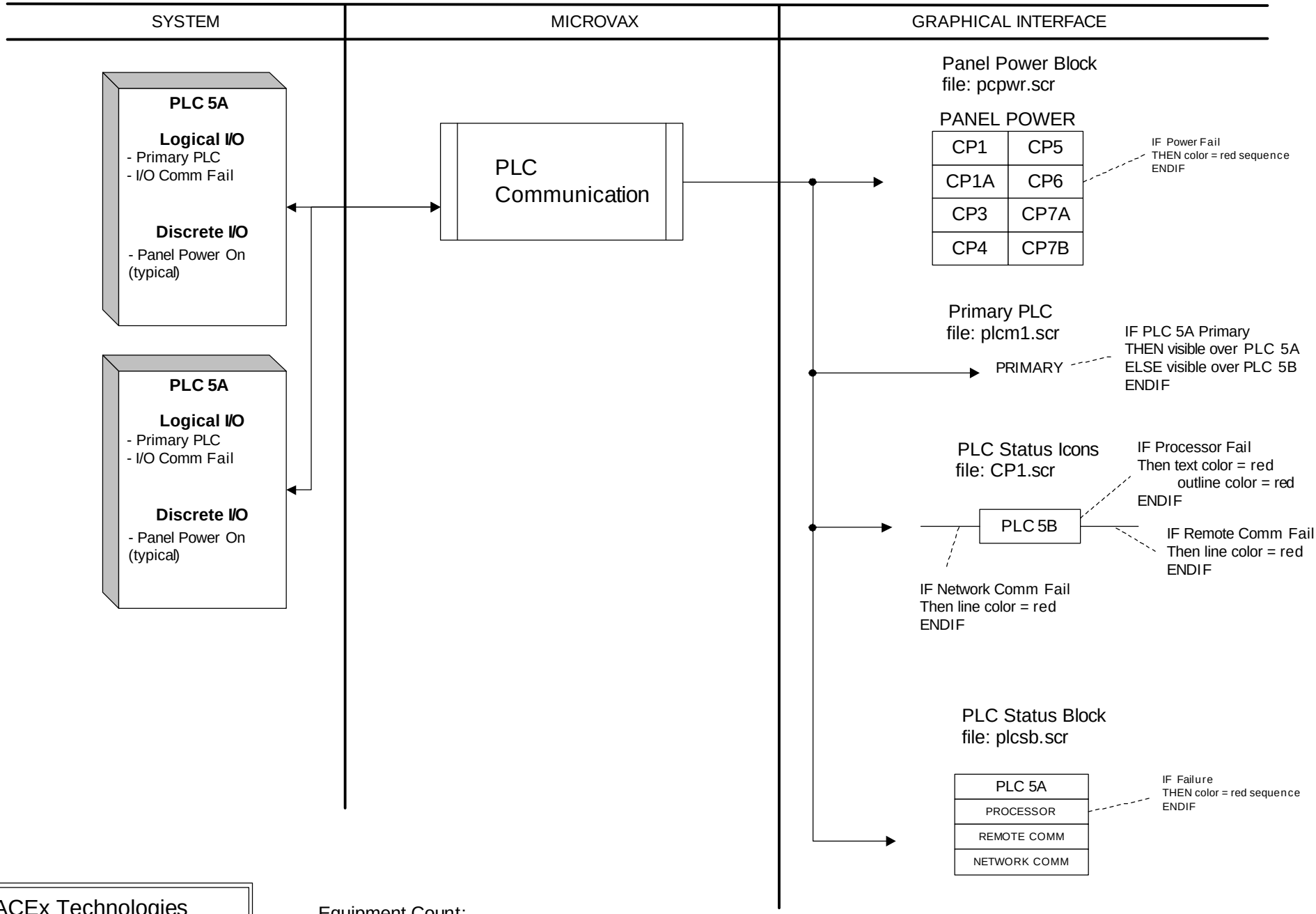

ACEx Technologies
VAX Upgrade Study
subtask 2C.vsd

PLC Diagram

Equipment Count:
Mt. Baker: 6 PLC's
Mercer Island: 6 PLC's

* see Color Sequences

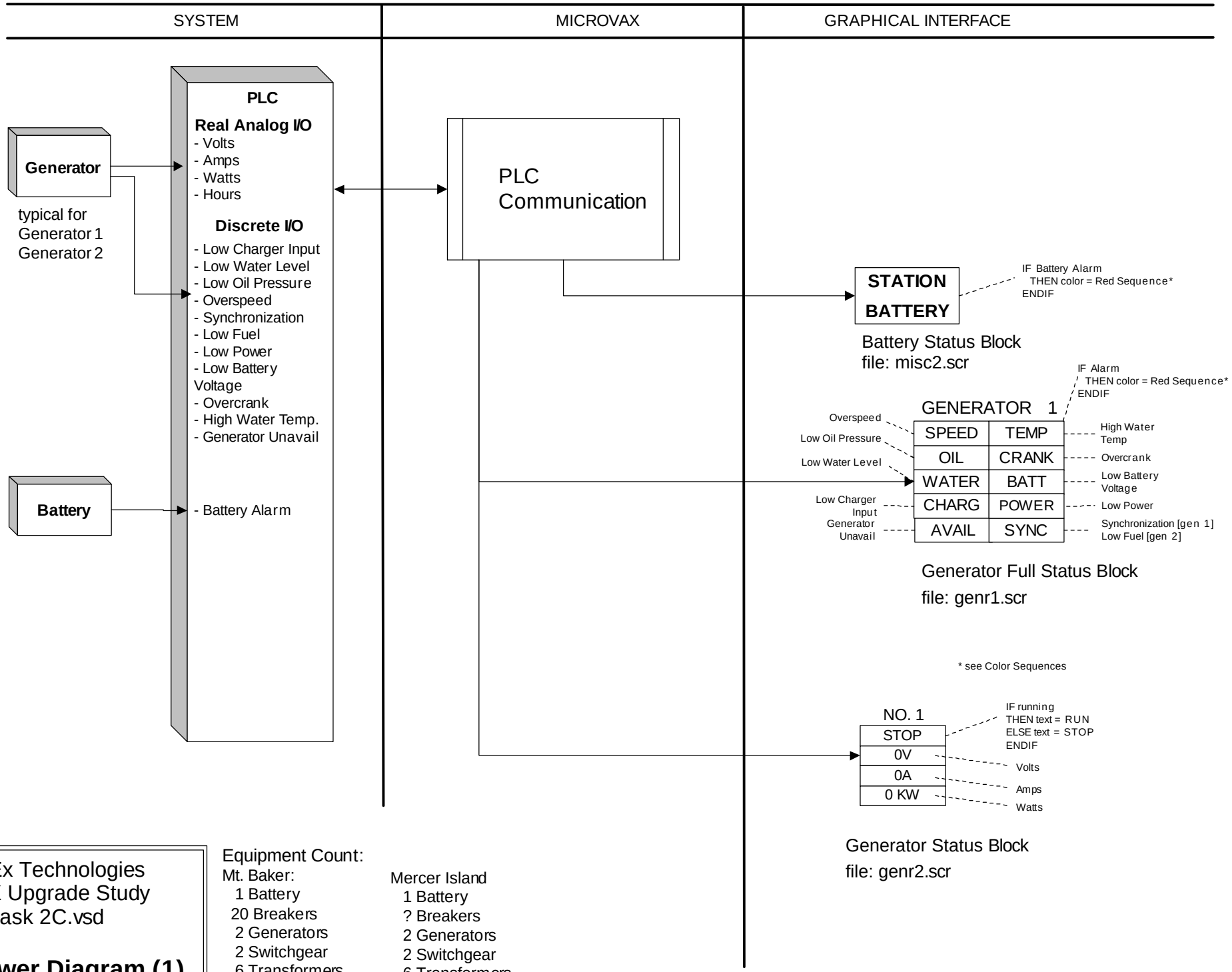

ACEx Technologies
VAX Upgrade Study
subtask 2C.vsd

Power Diagram (1)

Equipment Count:

Mt. Baker:
- 1 Battery
- 20 Breakers
- 2 Generators
- 2 Switchgear
- 6 Transformers

Mercer Island
- 1 Battery
- ? Breakers
- 2 Generators
- 2 Switchgear
- 6 Transformers

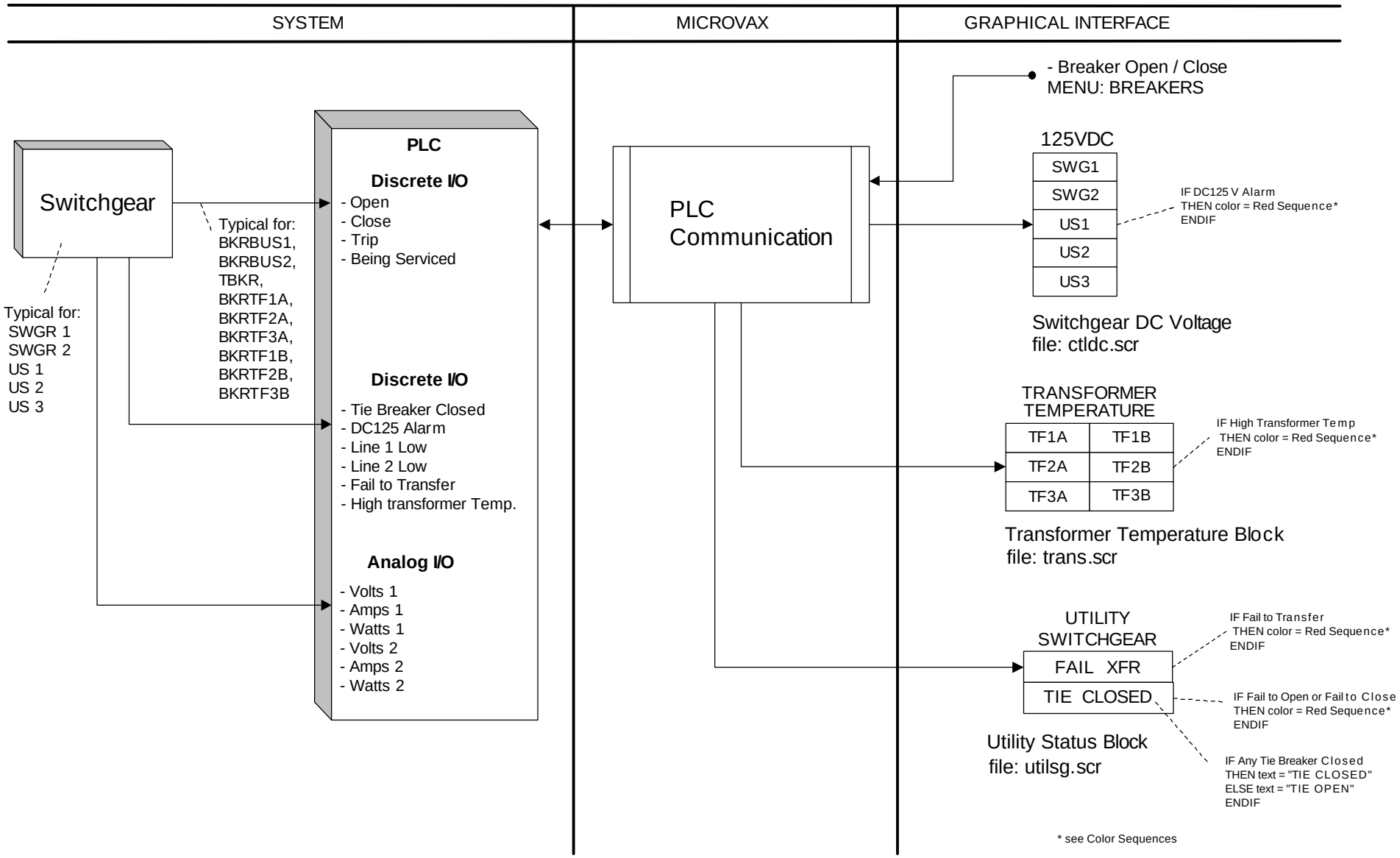

ACEx Technologies
VAX Upgrade Study
subtask 2C.vsd

Power Diagram (2)

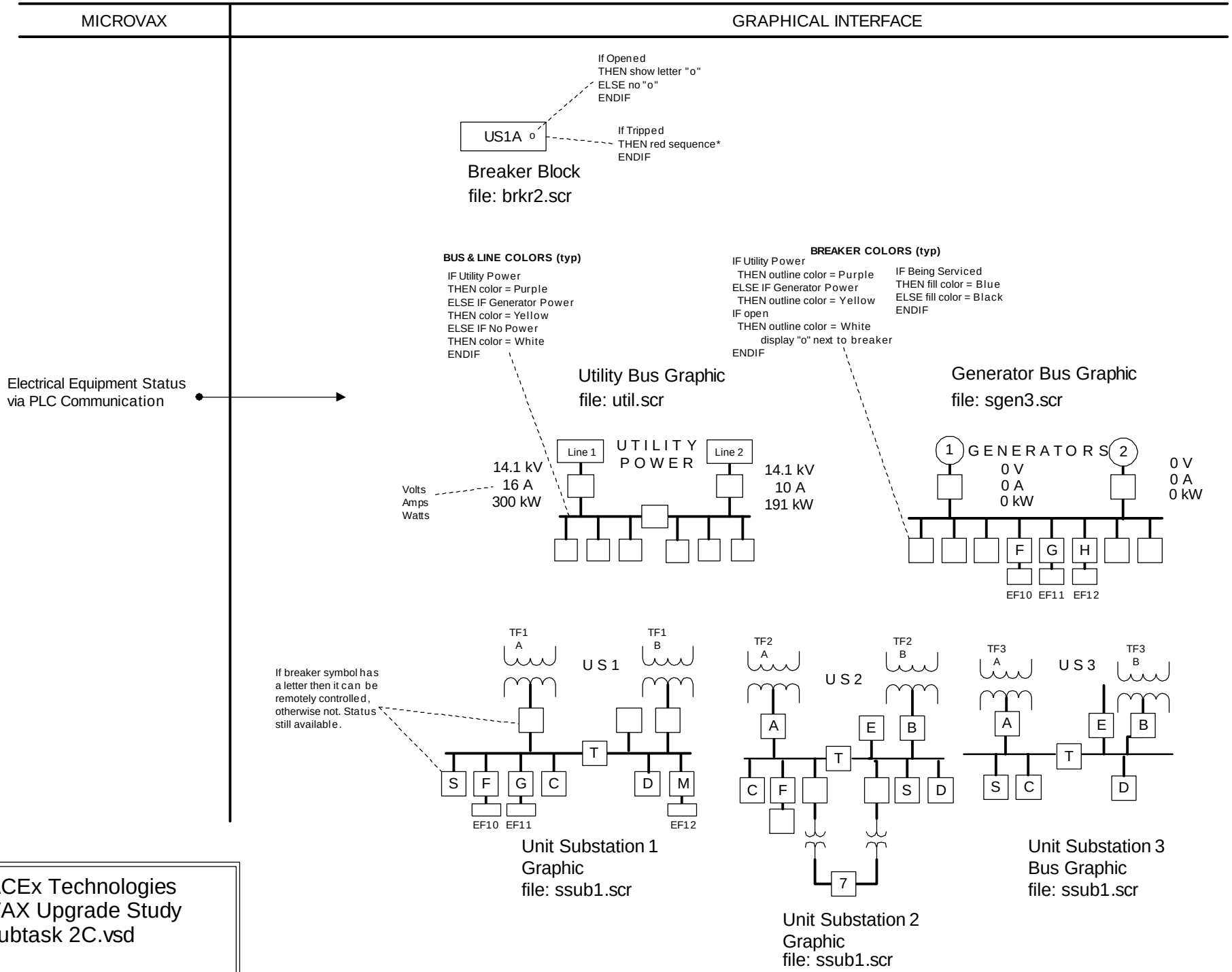

ACEx Technologies
VAX Upgrade Study
subtask 2C.vsd

Power Diagram (3)

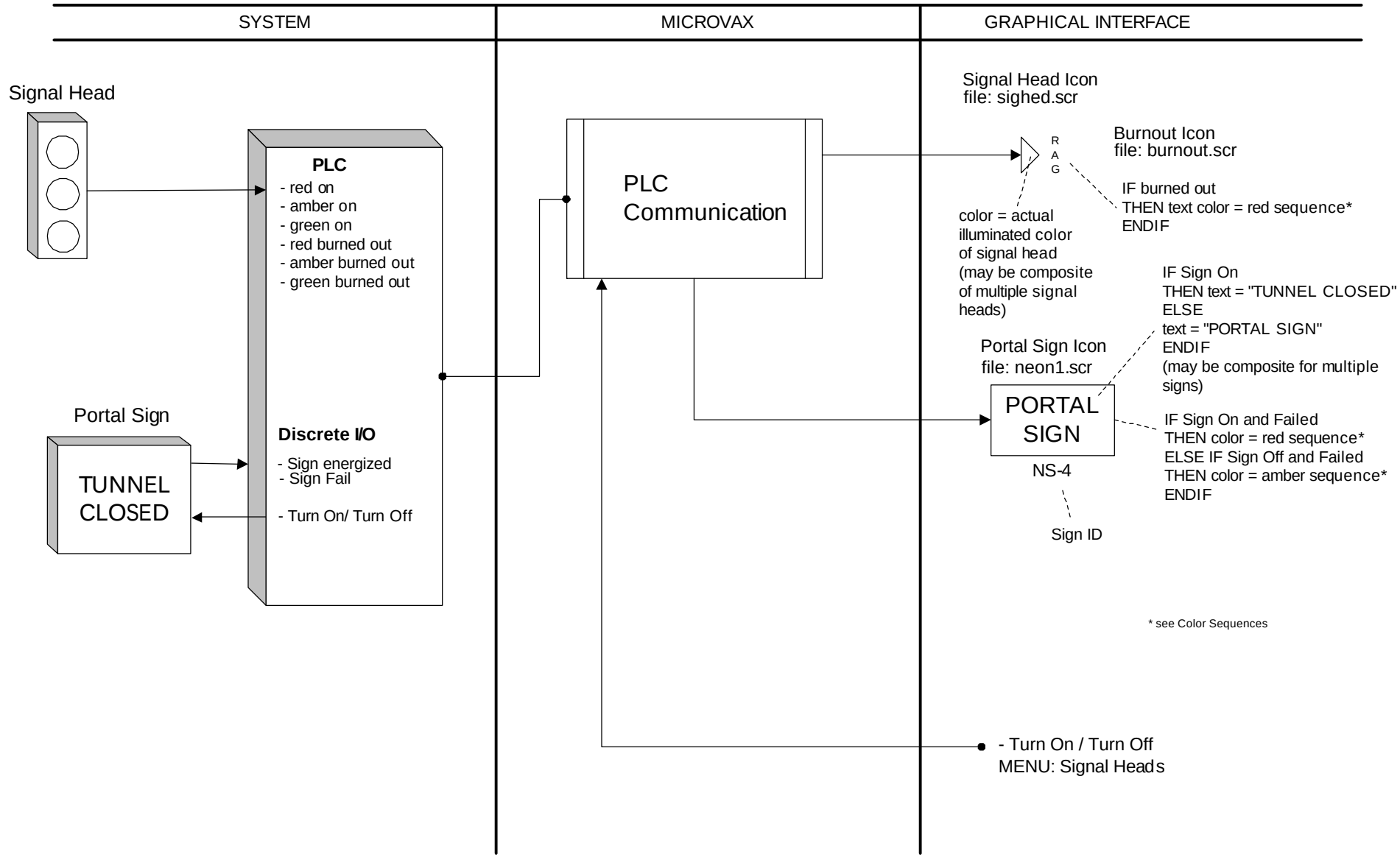

ACEx Technologies
VAX Upgrade Study
subtask 2C.vsd

Signs Diagram

Equipment Count:

Mt. Baker:	3 Portal Signs, 67 Signal Heads
Mercer Island:	3 Portal Signs, 42 Signal Heads

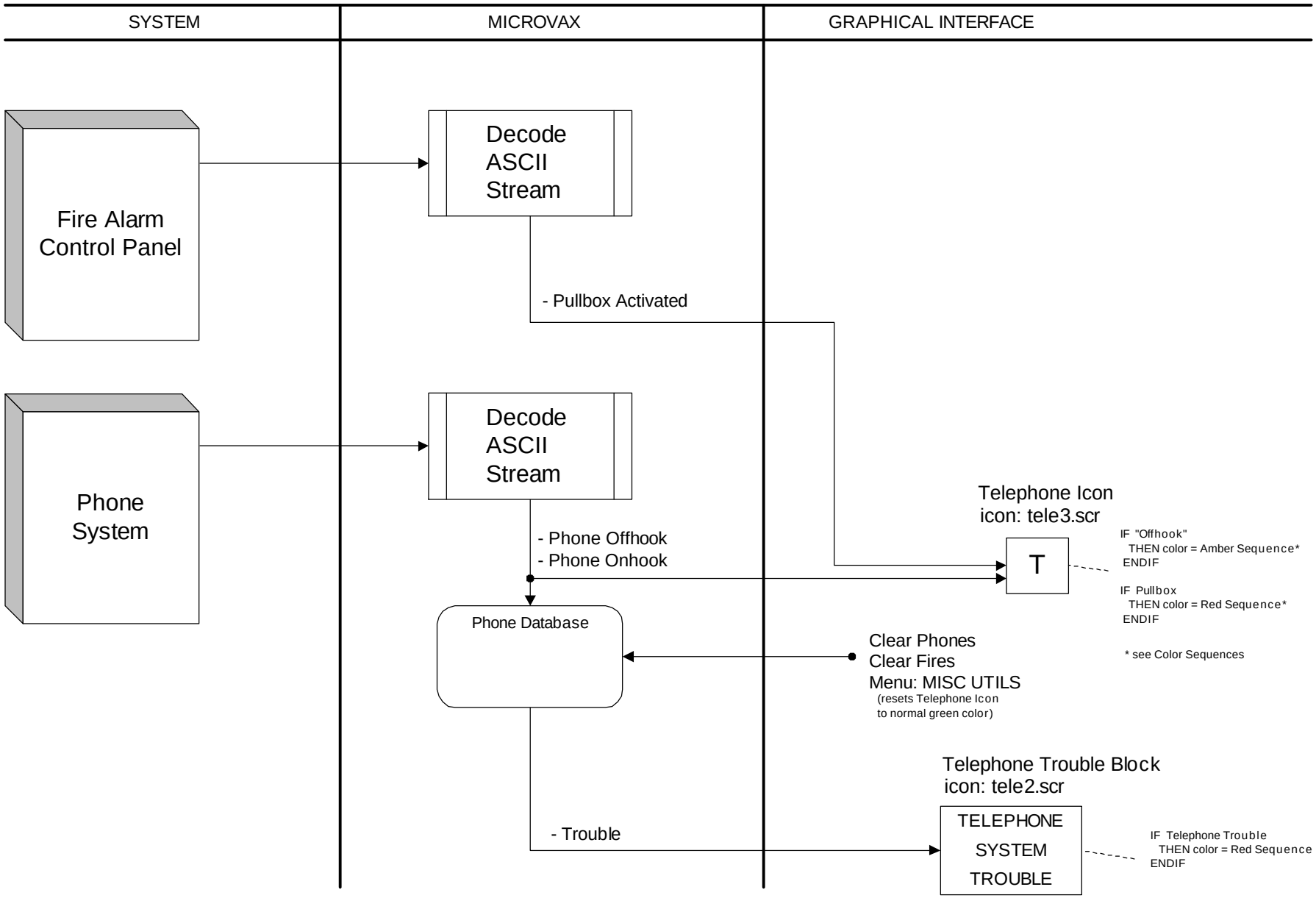

ACEx Technologies
VAX Upgrade Study
subtask 2C.vsd

Telephone Diagram

Equipment Count:

Mt. Baker:	94 Phones
Mercer Island:	64 Phones

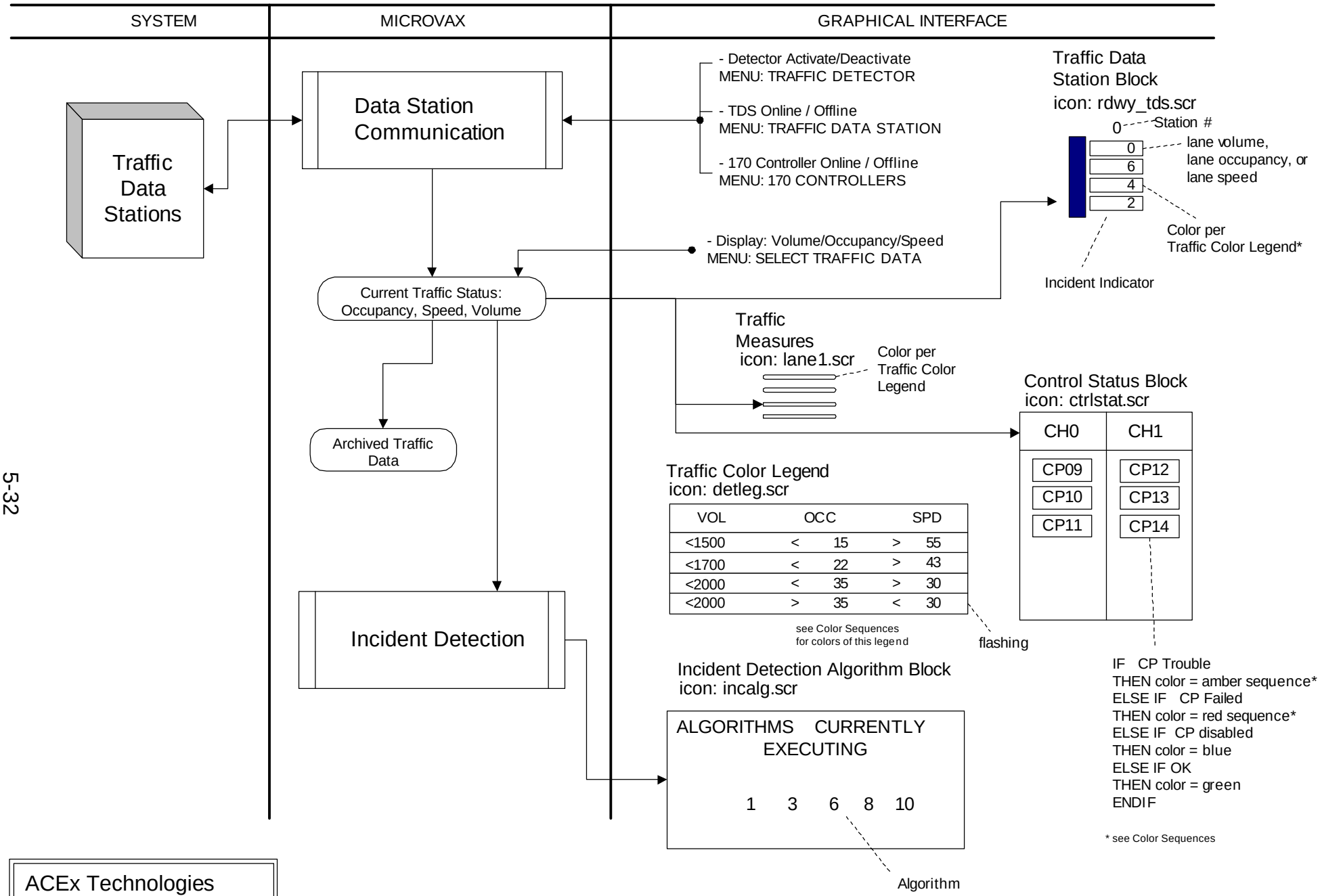

ACEx Technologies
VAX Upgrade Study
subtask 2C.vsd

Traffic Diagram (1)

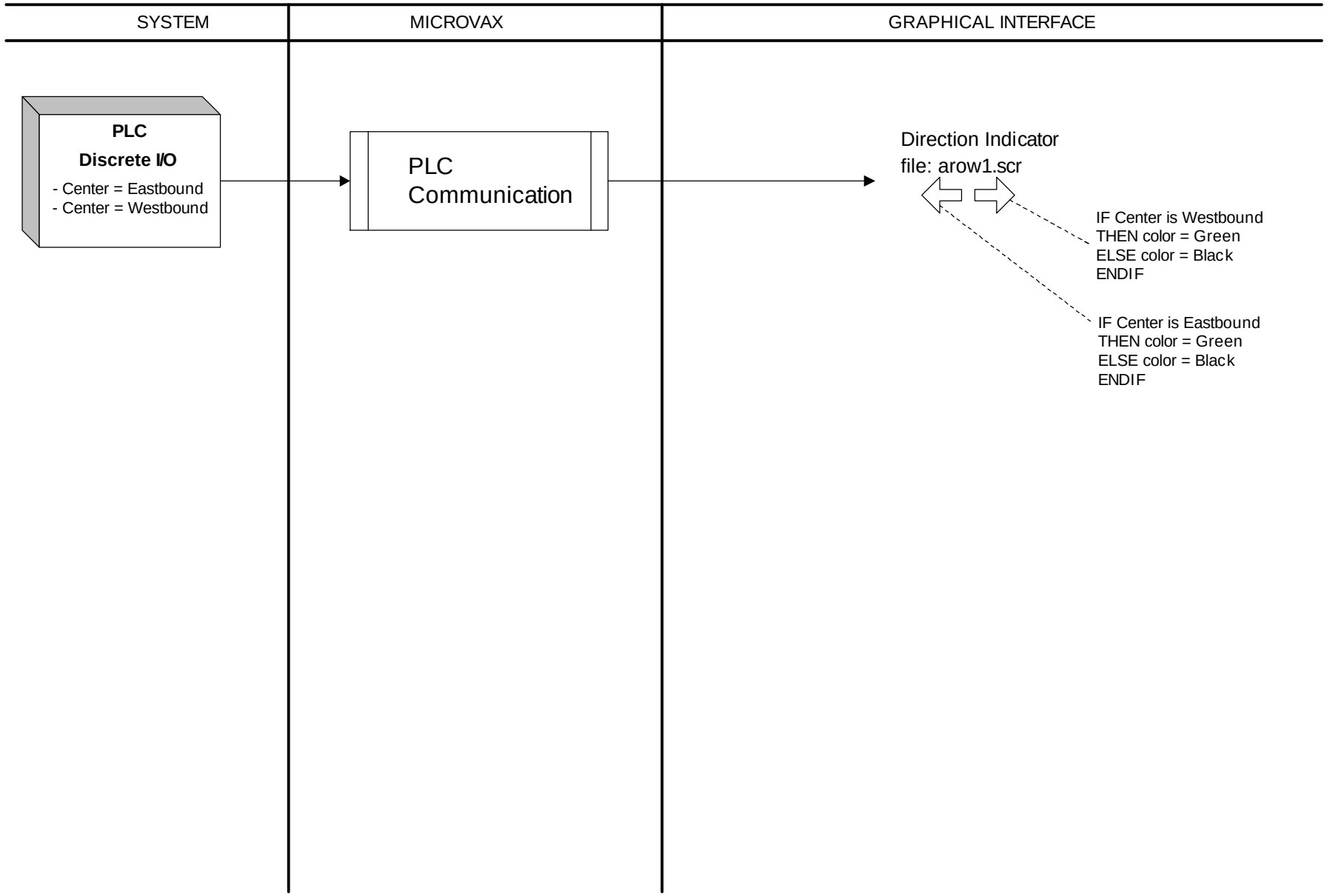

ACEx Technologies
VAX Upgrade Study
subtask 2C.vsd

Traffic Diagram (2)

APPENDIX T-3

TUNNEL CENTRAL CONTROL SYSTEM (EXISTING)

OPERATOR'S SCREENS

Function Key: F1
file: sms.dat / sms.dyn

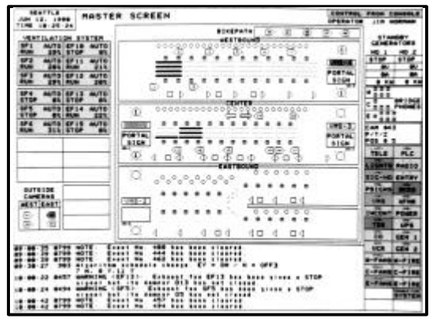

Function Key: F2
file: str.dat / str.dyn

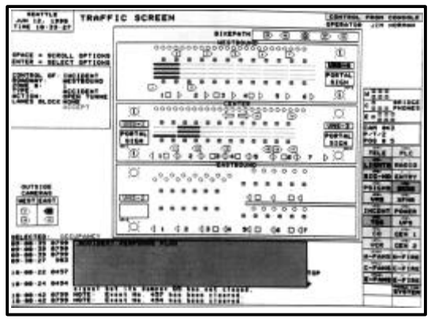

Function Key: F3
file: std.dat / std.dyn

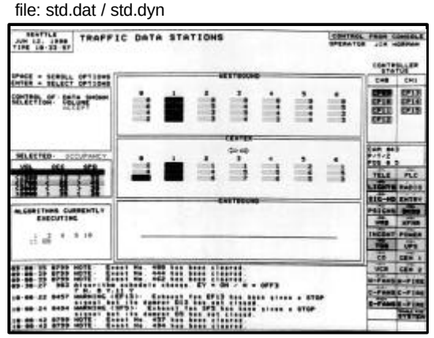

Function Key: F4
file: sco.dat / sco.dyn

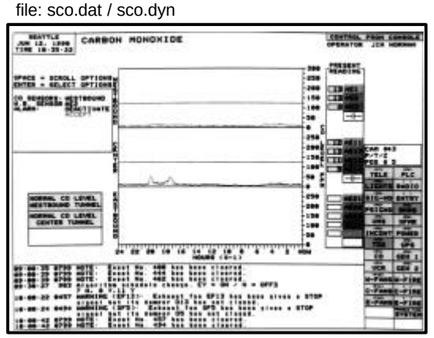

Function Key: F5
file: sls.dat / sls.dyn

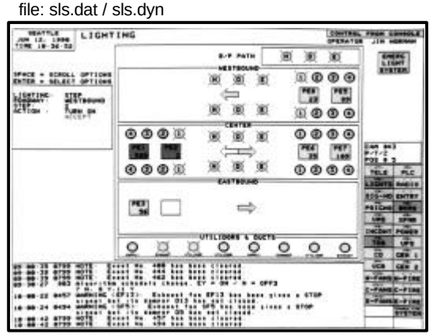

Function Key: F6
file: ssh.dat / ssh.dyn

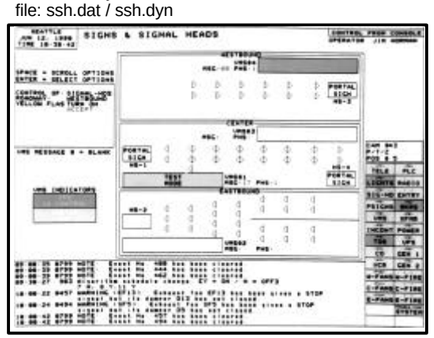

Function Key: F7
file: scm.dat / scm.dyn

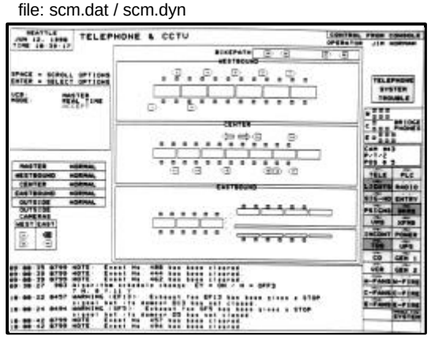

Function Key: F8
file: spr.dat / spr.dyn

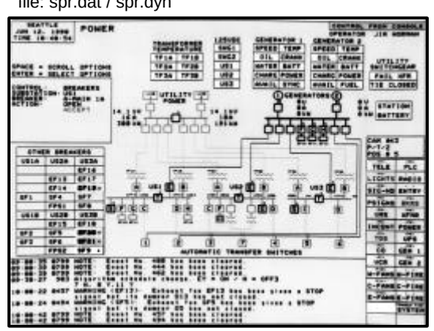

Function Key: F9
file: scp.dat / scp.dyn

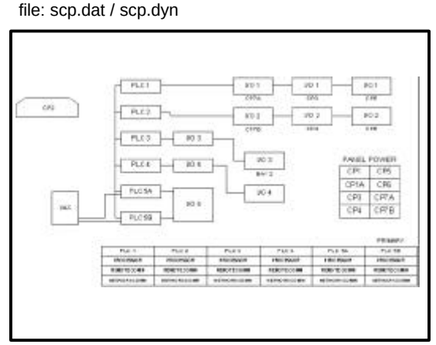

Function Key: F10
file: sfw.dat / sfw.dyn

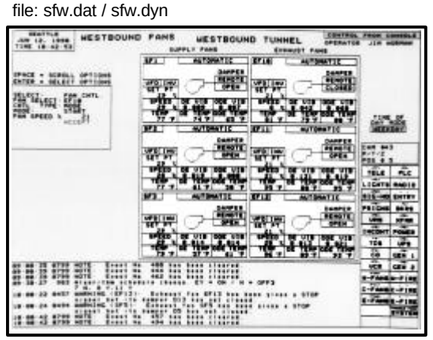

Function Key: F11
file: sfc.dat / sfc.dyn

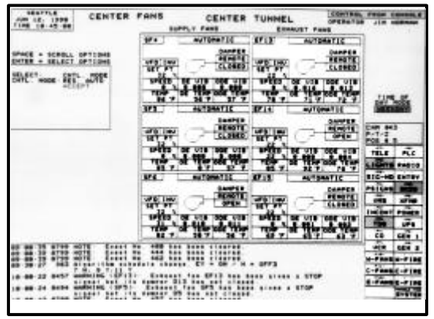

Function Key: F12
file: ssf.dat / ssf.dyn

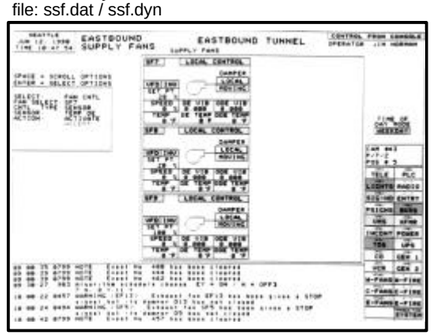

Function Key: F13

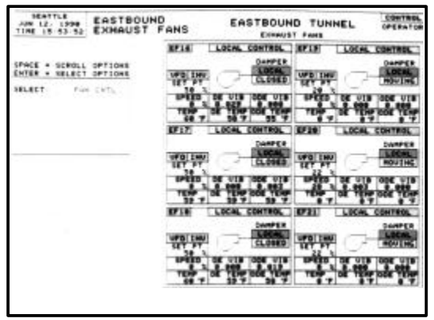

Function Key: F15
file: sfr.dat / sfr.dyn

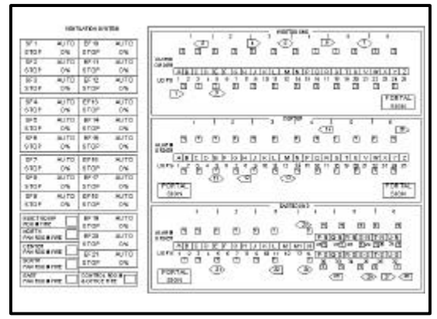

Function Key: F16
file: sev.dat / sev.dyn

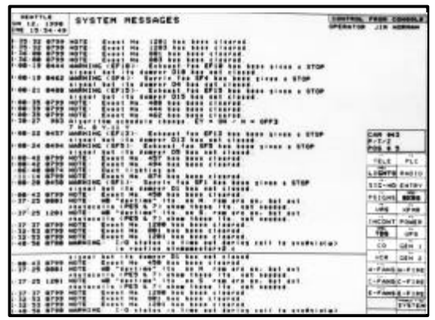

ACEx Technologies
VAX Upgrade Study
subtask 2B.vsd

Display Navigation Block Diagram

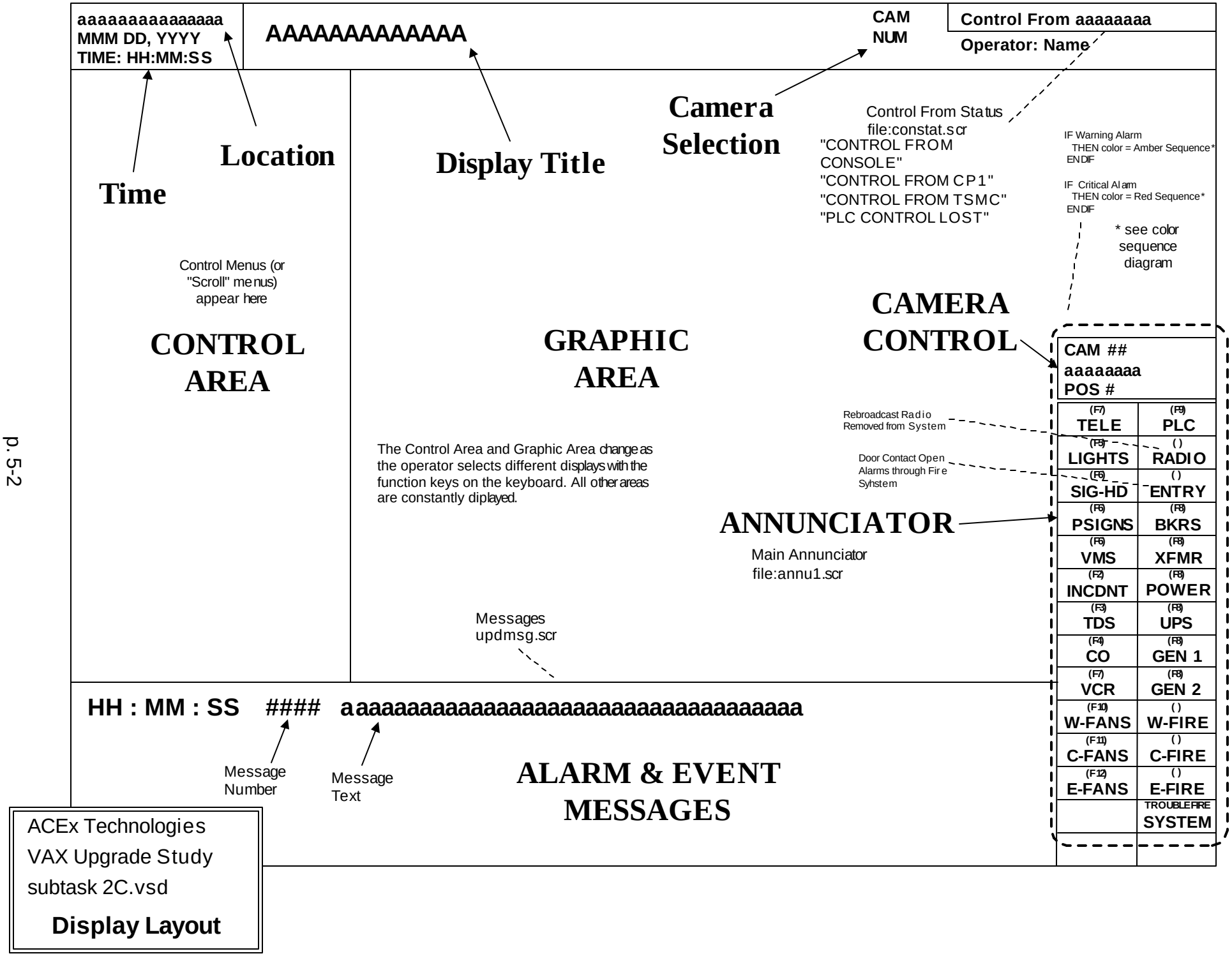

ACEx Technologies
VAX Upgrade Study
subtask 2C.vsd

Display Layout

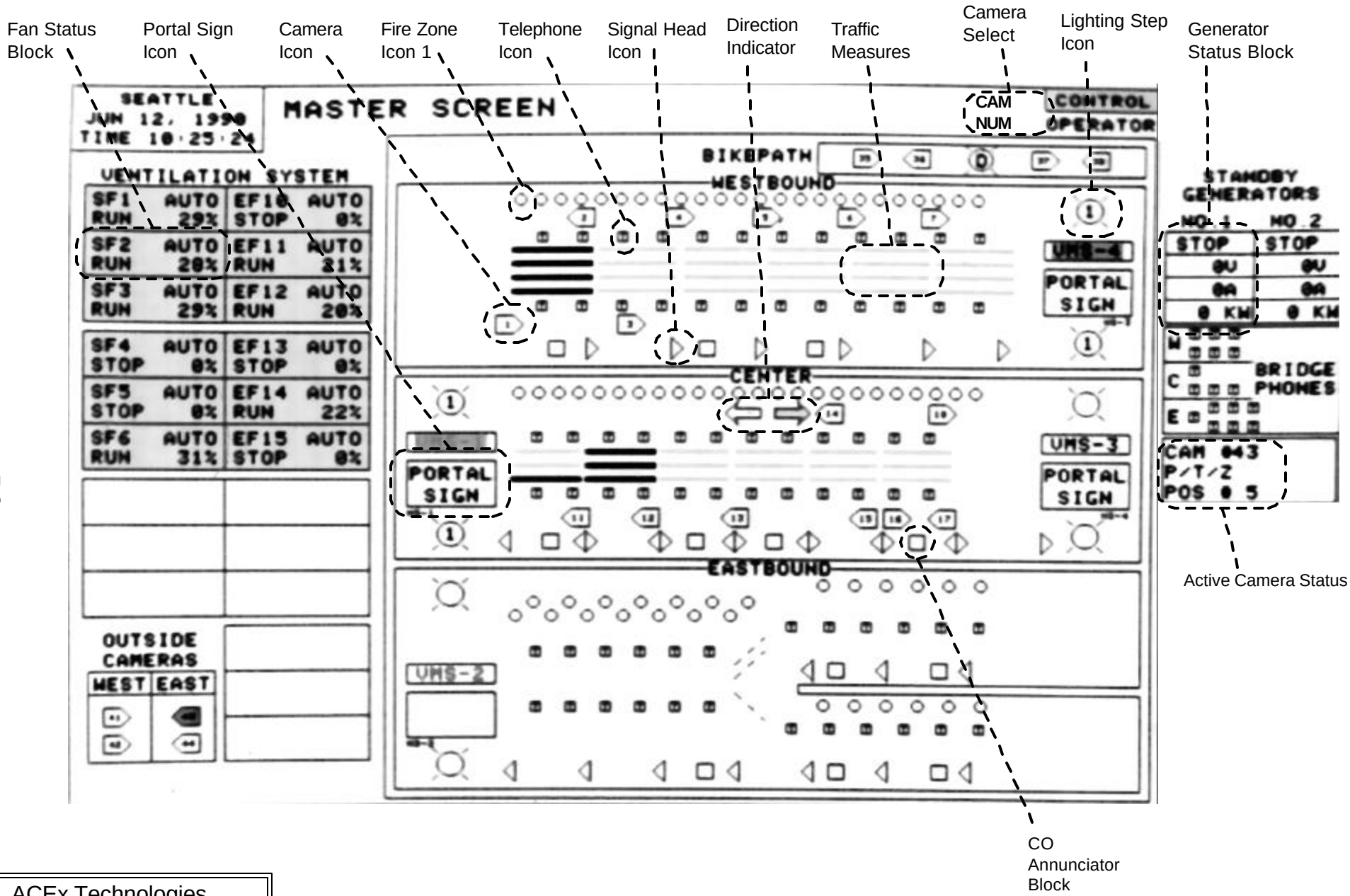

ACEx Technologies
VAX Upgrade Study
F01.vsd

Master Screen

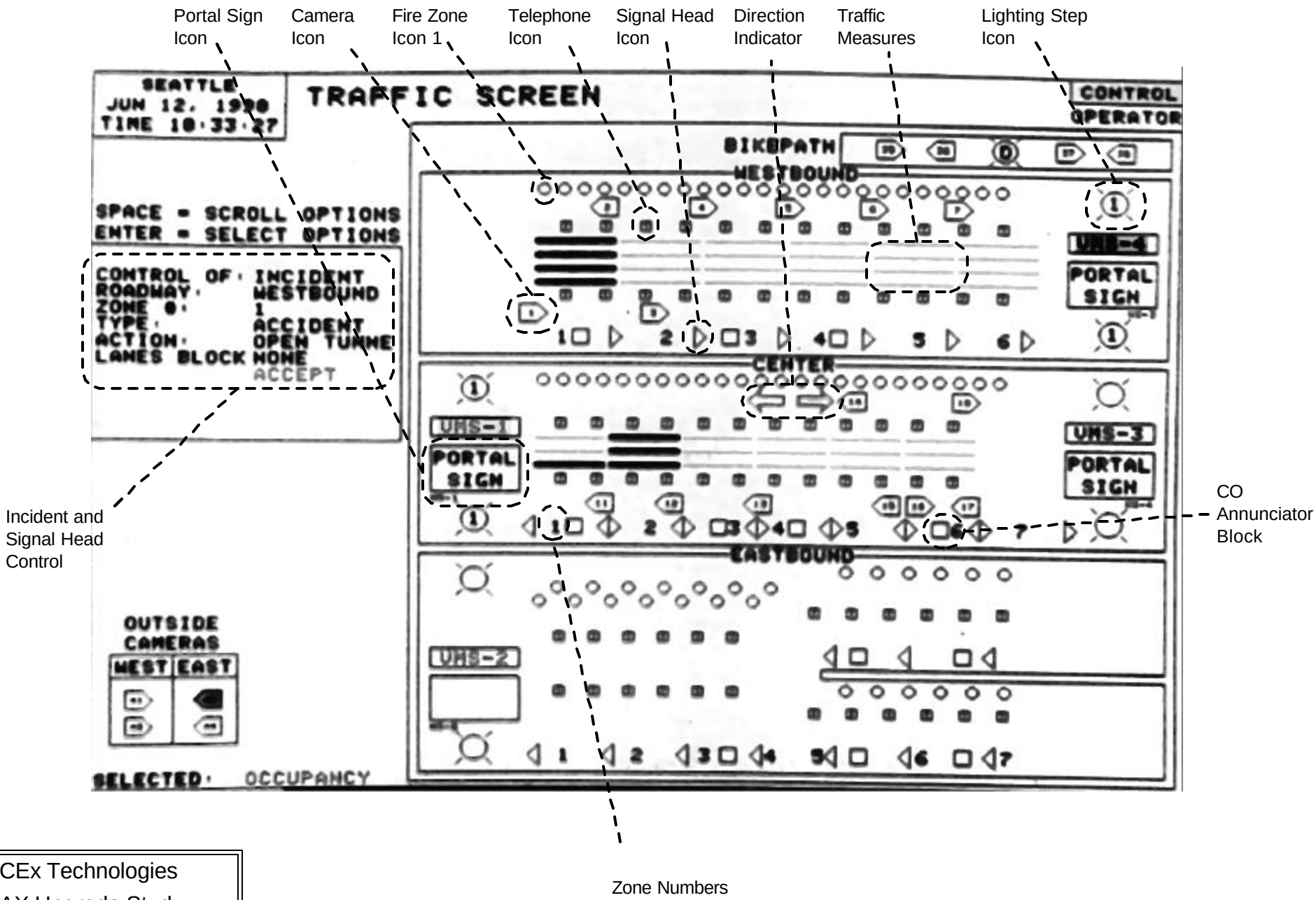

ACEx Technologies
VAX Upgrade Study
F02.vsd

Traffic Screen

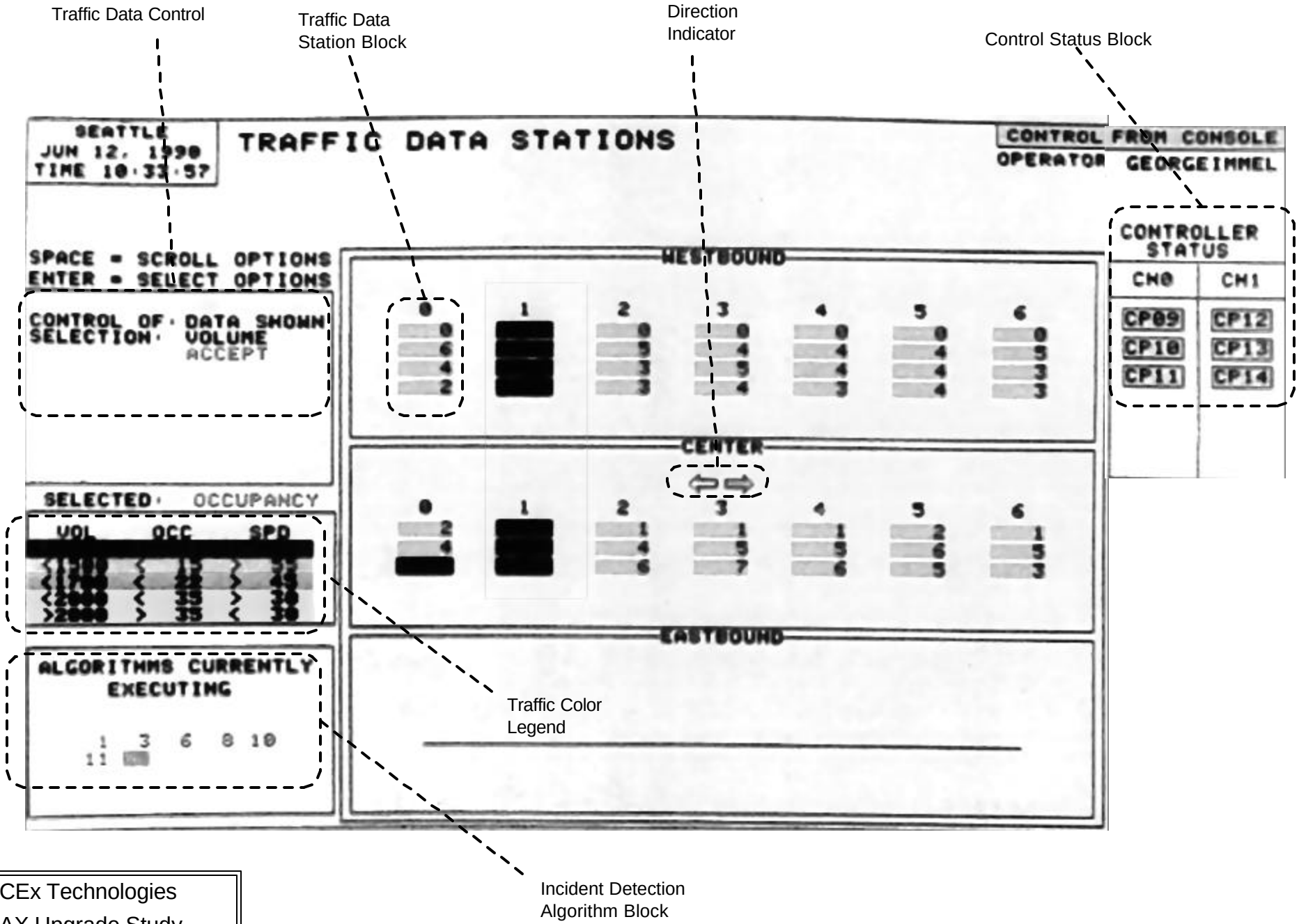

ACEx Technologies
VAX Upgrade Study
F03.vsd

Traffic Data Stations

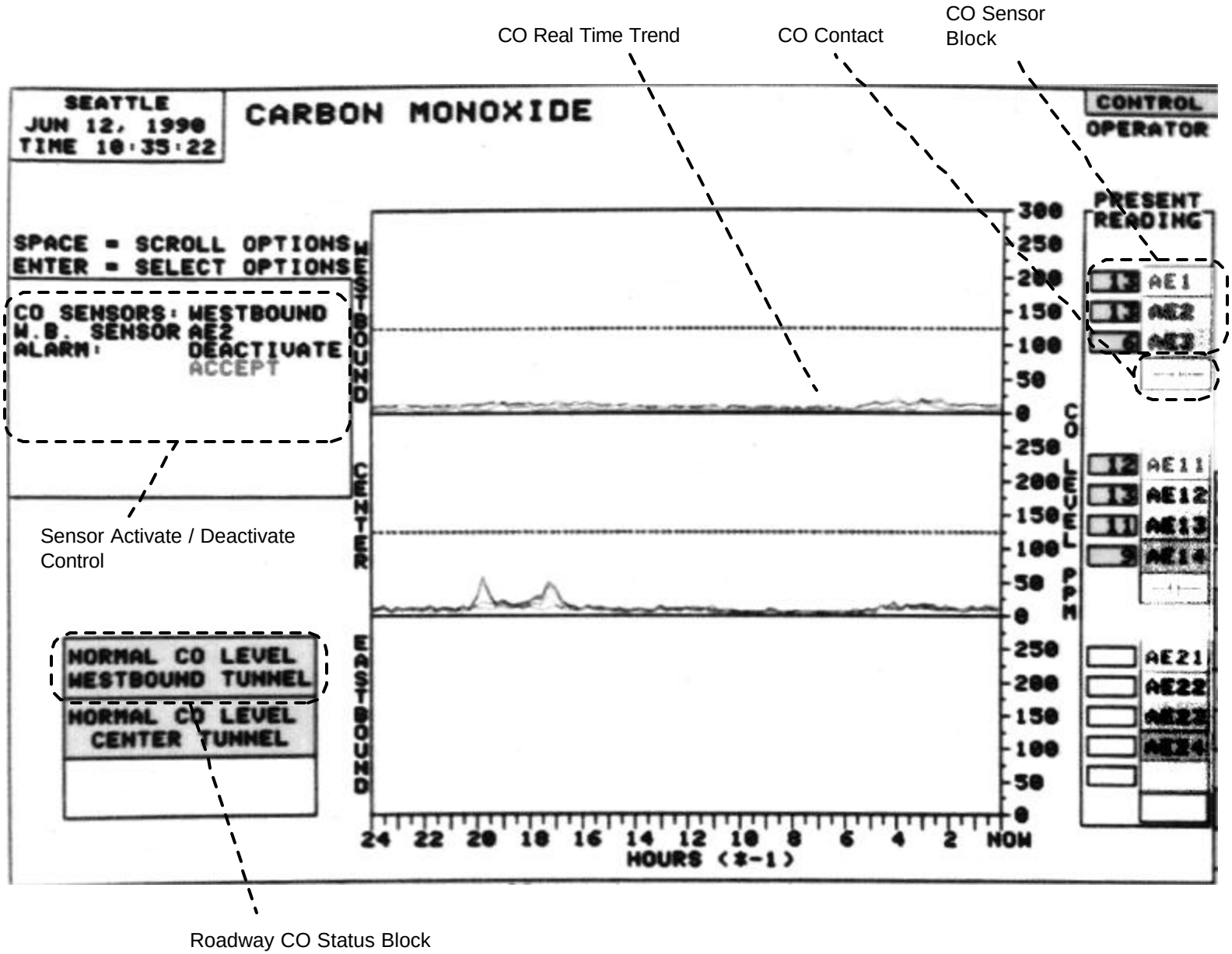

ACEx Technologies
VAX Upgrade Study
F04.vsd

Carbon Monoxide

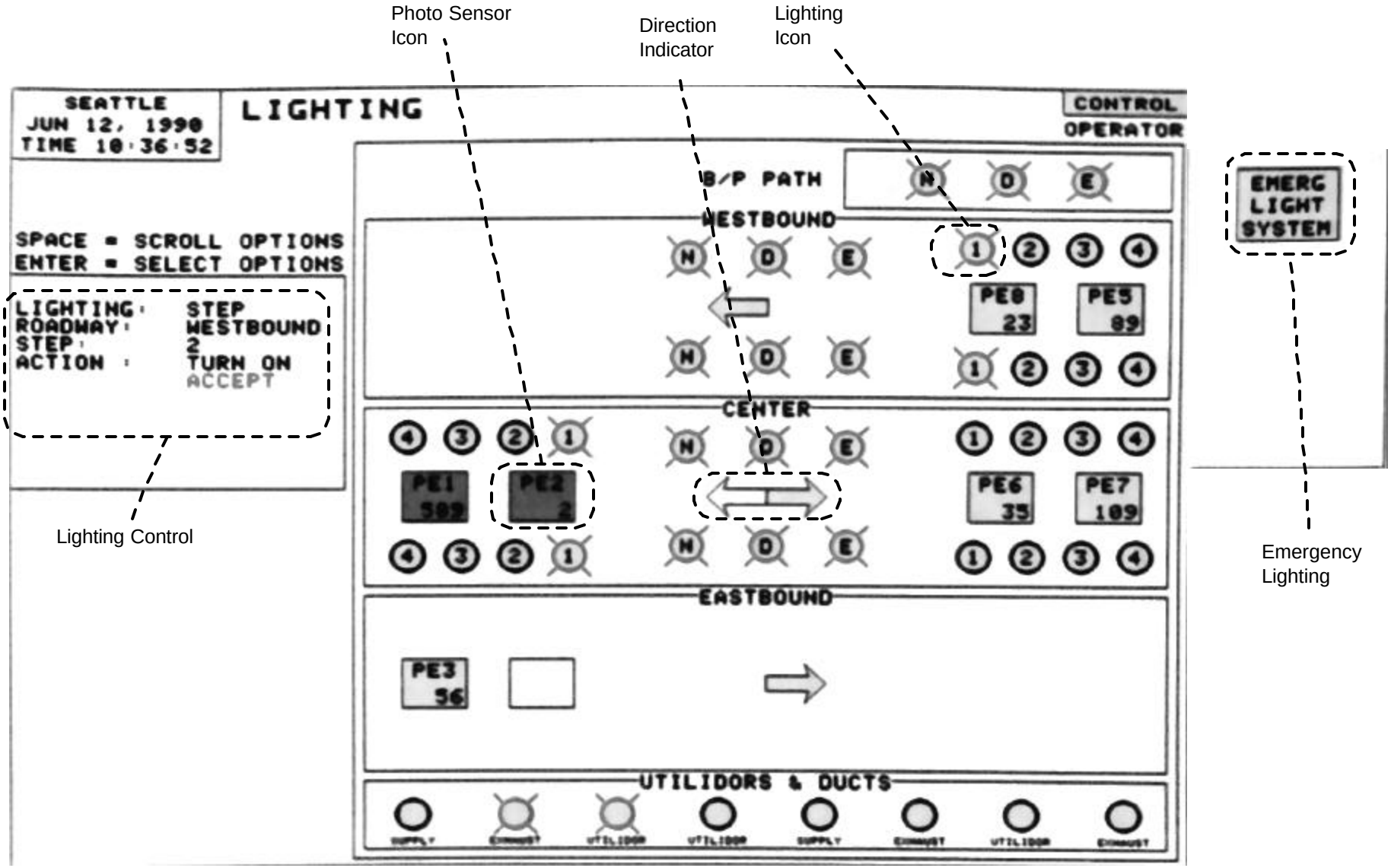

ACEx Technologies
VAX Upgrade Study
F05.vsd

Lighting

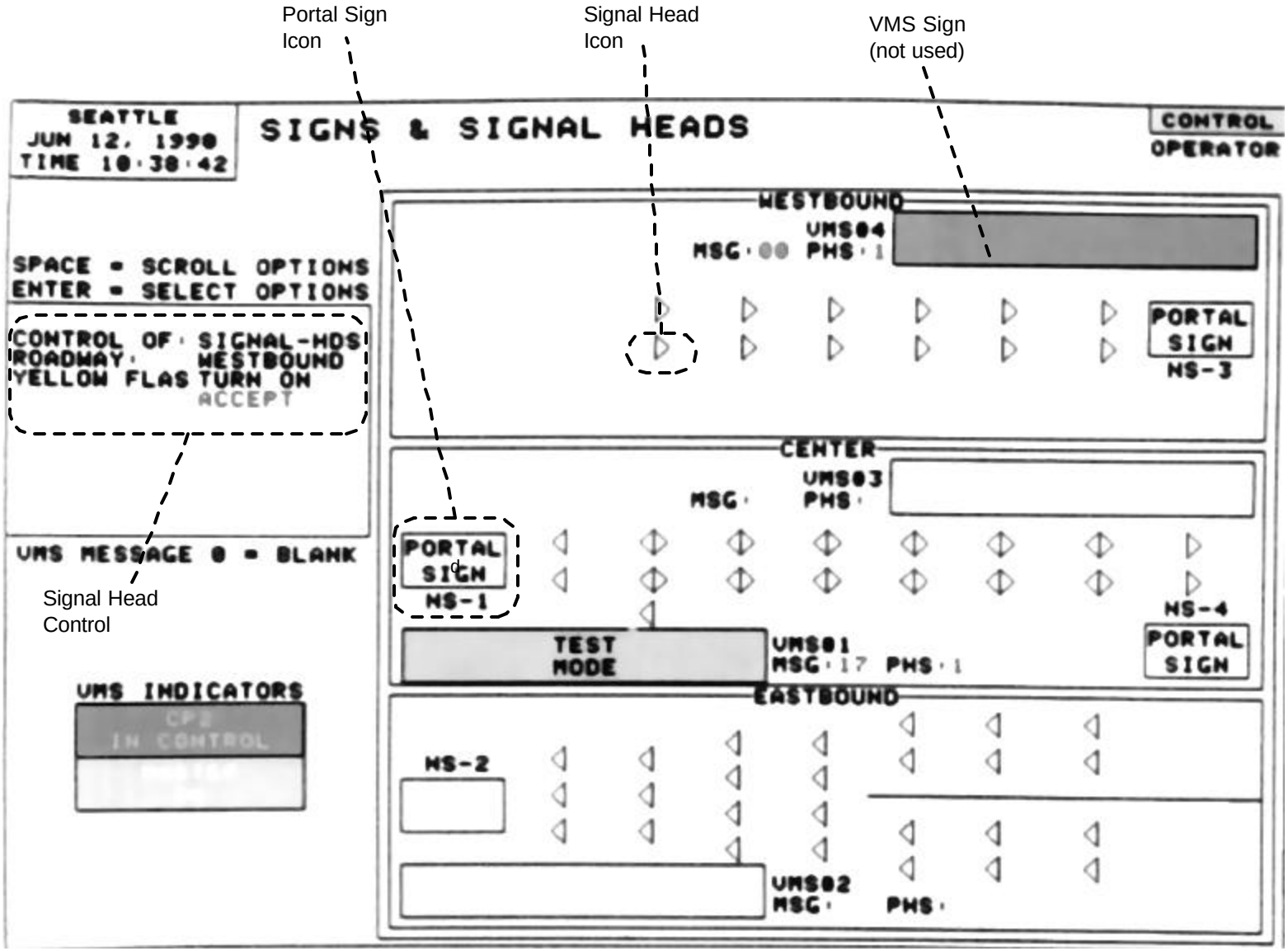

ACEx Technologies
VAX Upgrade Study
F06.vsd

Signs & Signal Heads

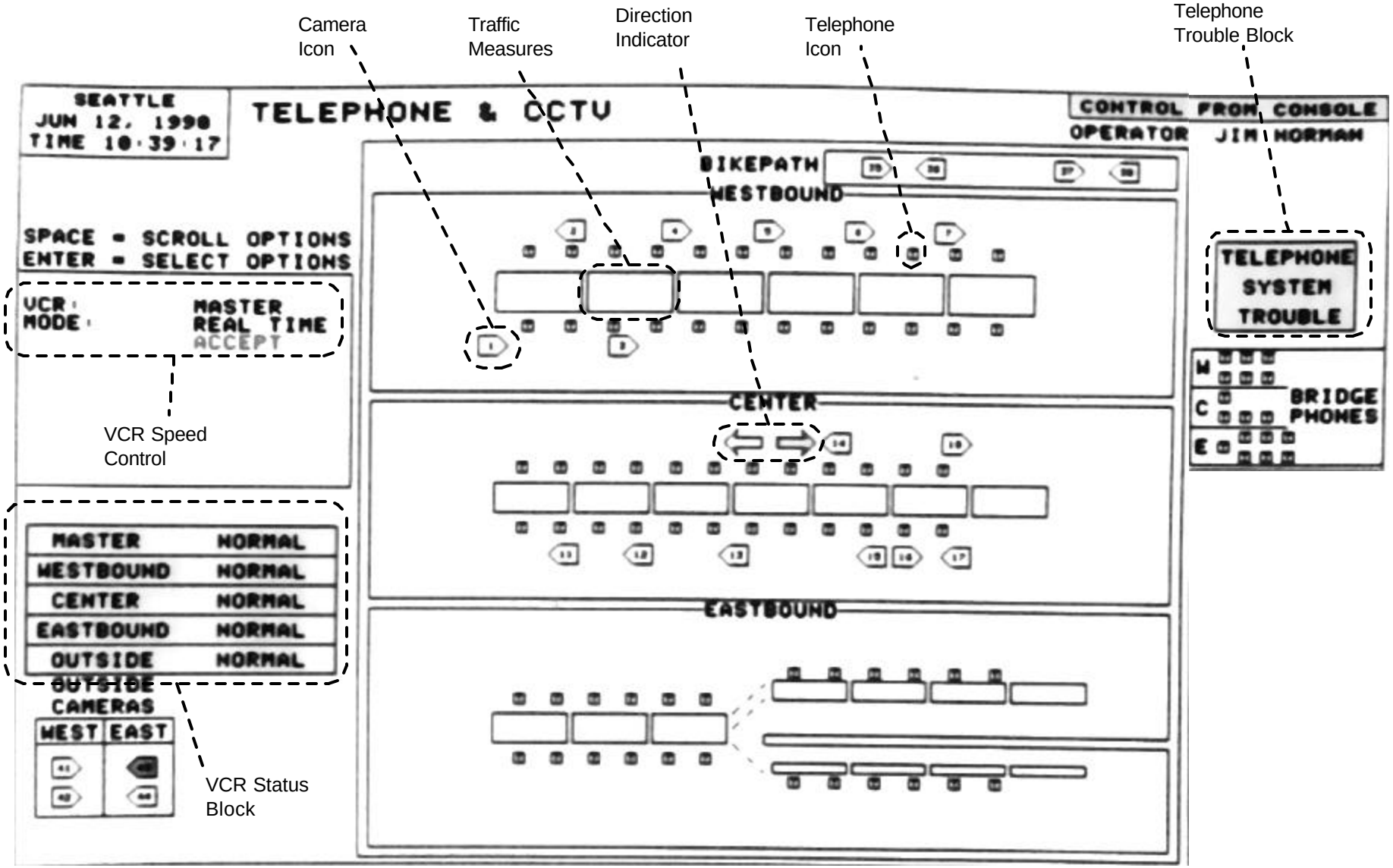

ACEx Technologies
VAX Upgrade Study
F07.vsd

Telephone & CCTV

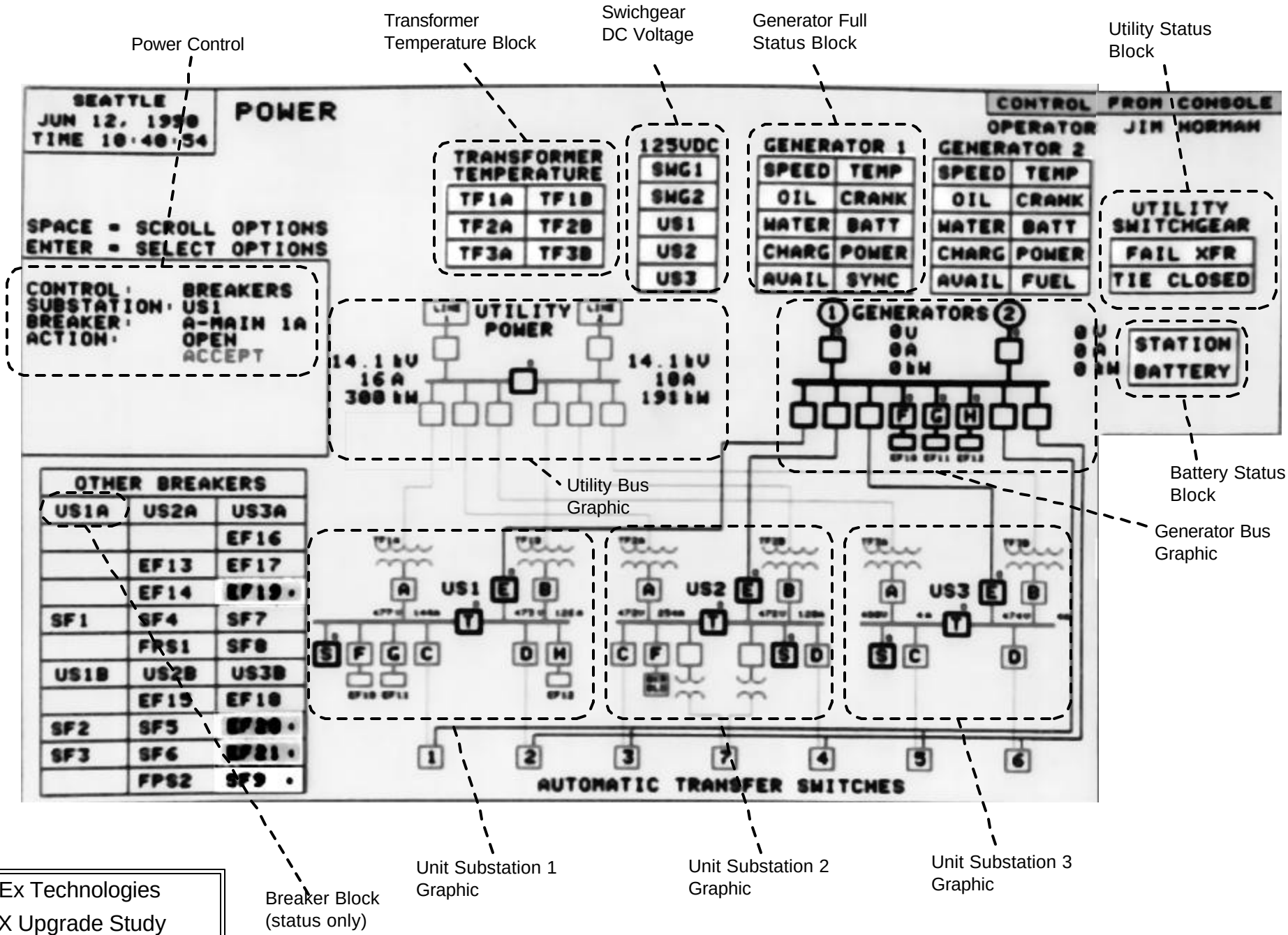

ACEx Technologies
VAX Upgrade Study
F08.vsd

Power

PLC & CONTROL PANEL STATUS

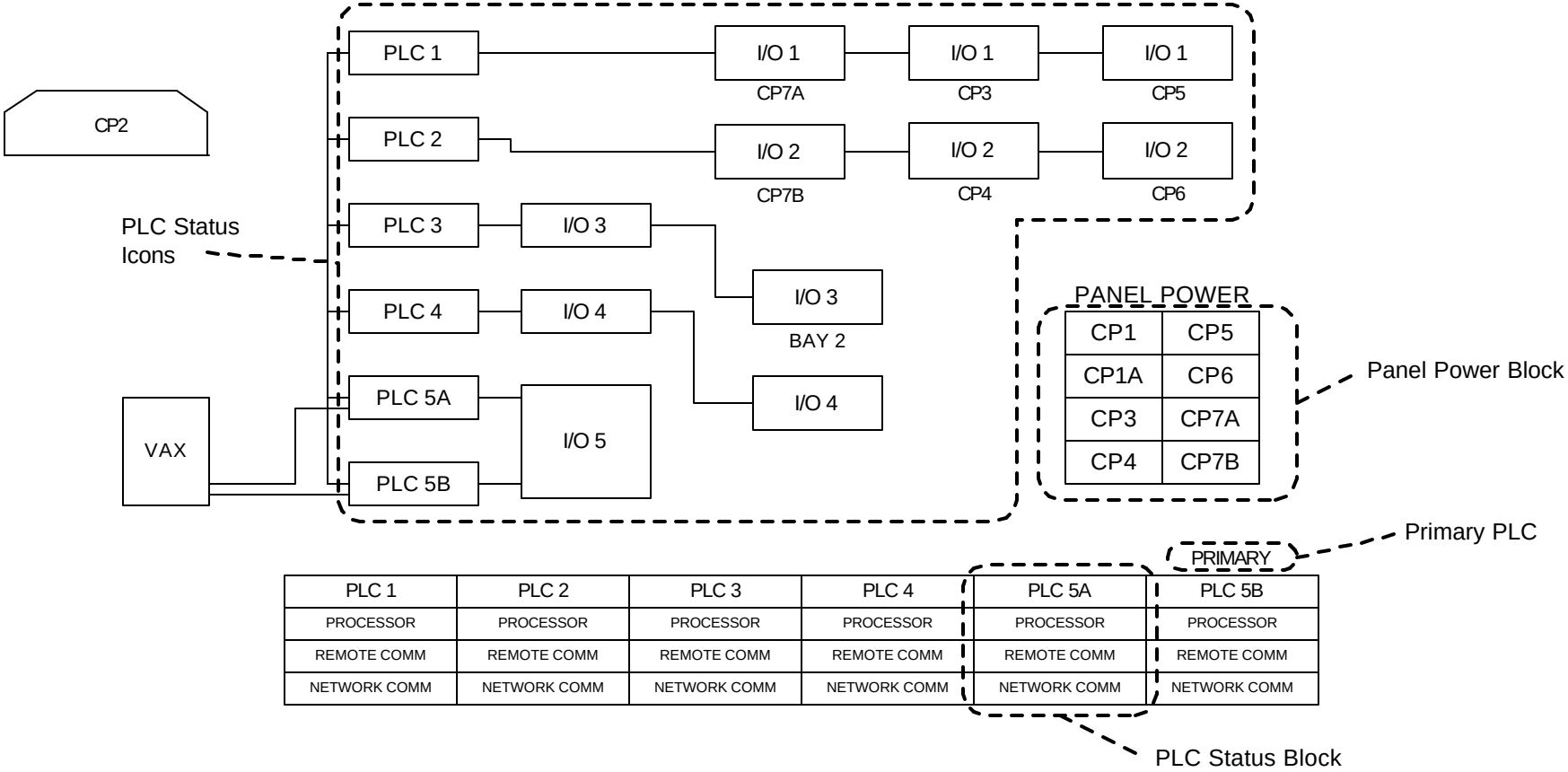

ACEx Technologies
VAX Upgrade Study
subtask 2C.vsd

PLC & Control Panel Status

An actual print of the display was not available. This drawing is a recreation of the actual screen.

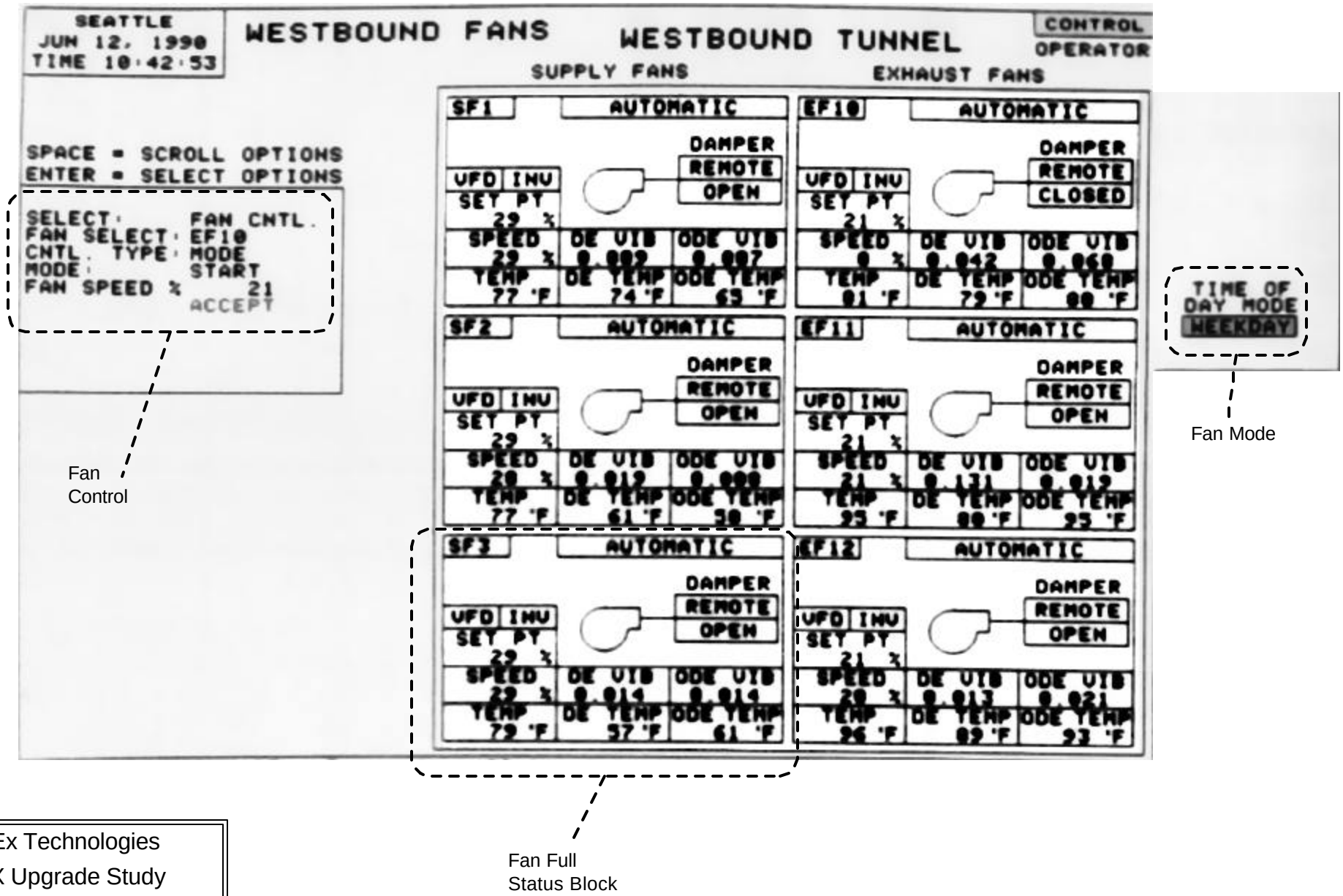

ACEx Technologies
VAX Upgrade Study
F10.vsd

Westbound Fans

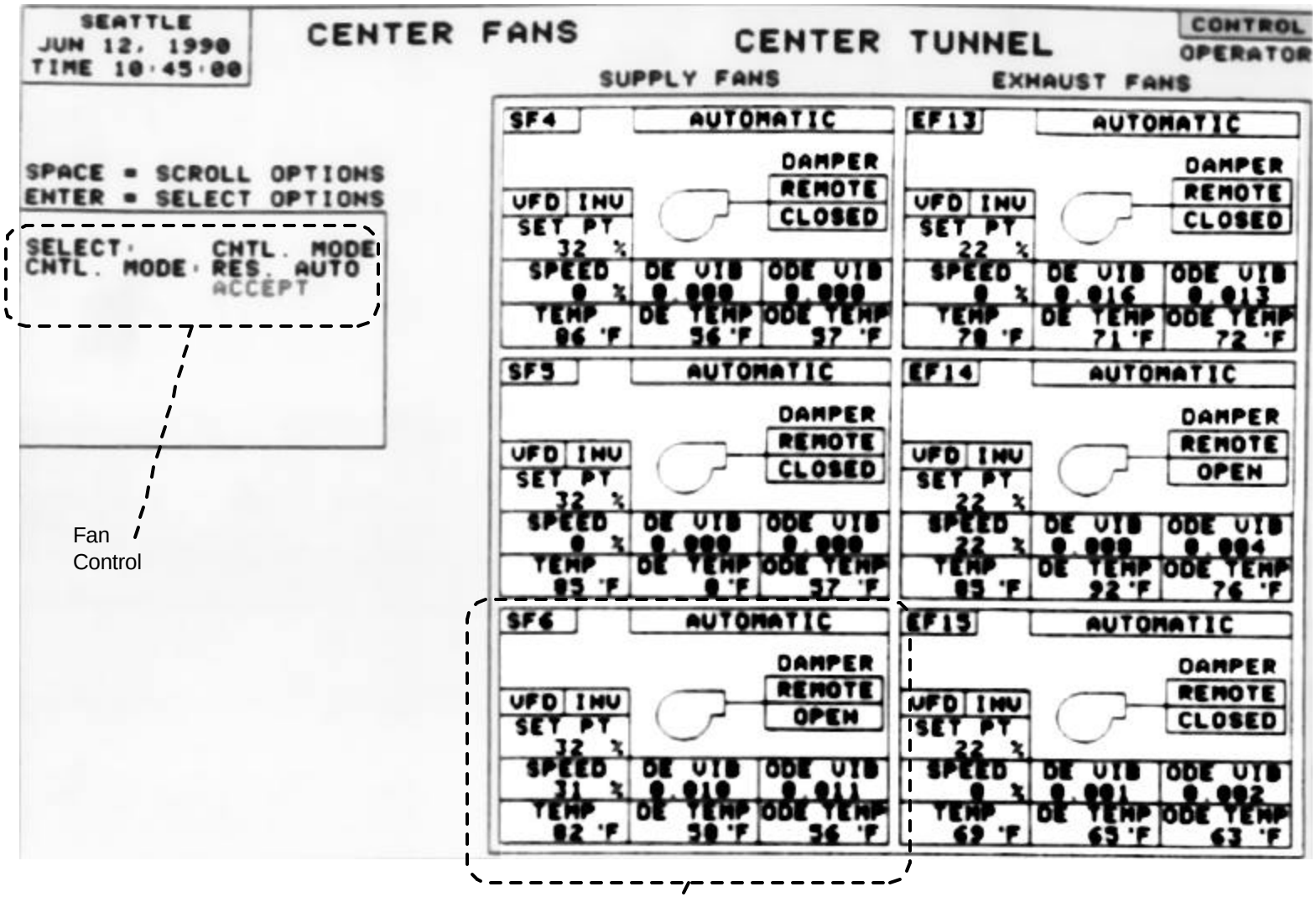

Fan Control

Fan Full Status Block

ACEx Technologies
VAX Upgrade Study
F11.vsd

Center Fans

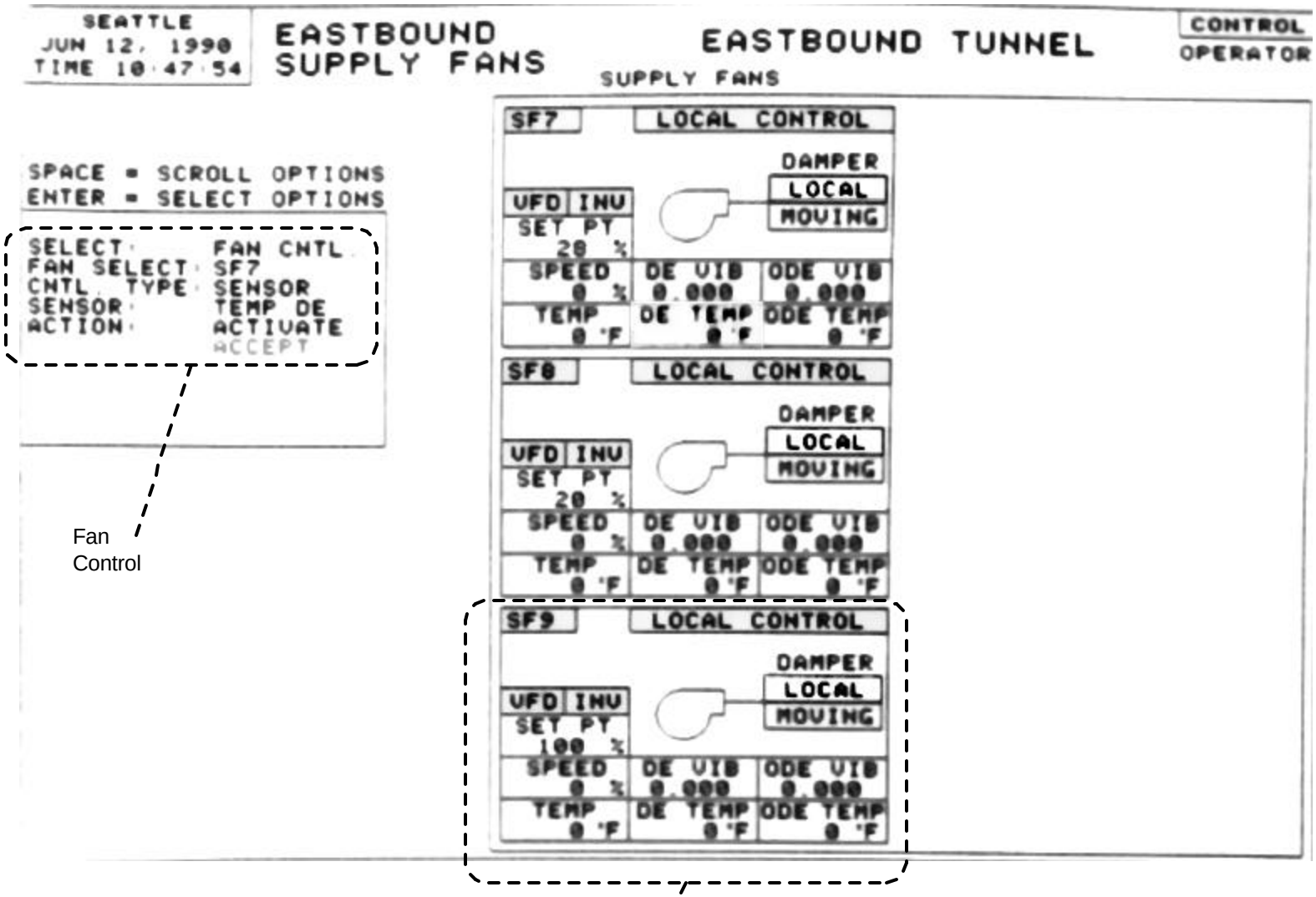

Fan Control

Fan Full Status Block

ACEx Technologies
VAX Upgrade Study
F12.vsd
Eastbound Supply Fans

A print of the Eastbound Exhaust Fans was unavailable. It is essentially the same as this and the other fan displays.

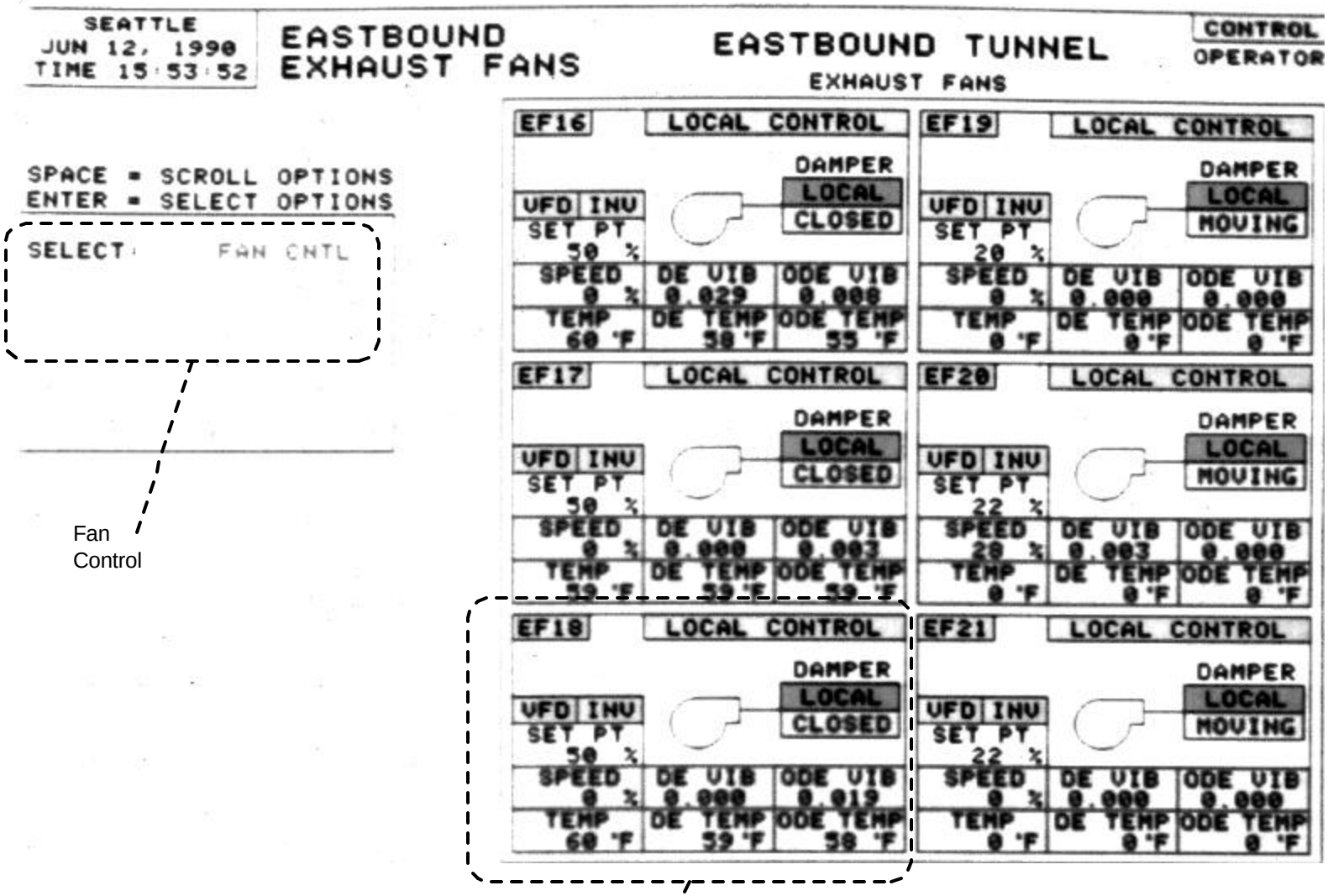

Fan Control

Fan Full Status Block

ACEx Technologies
VAX Upgrade Study
F13.vsd

Eastbound Exhaust Fans

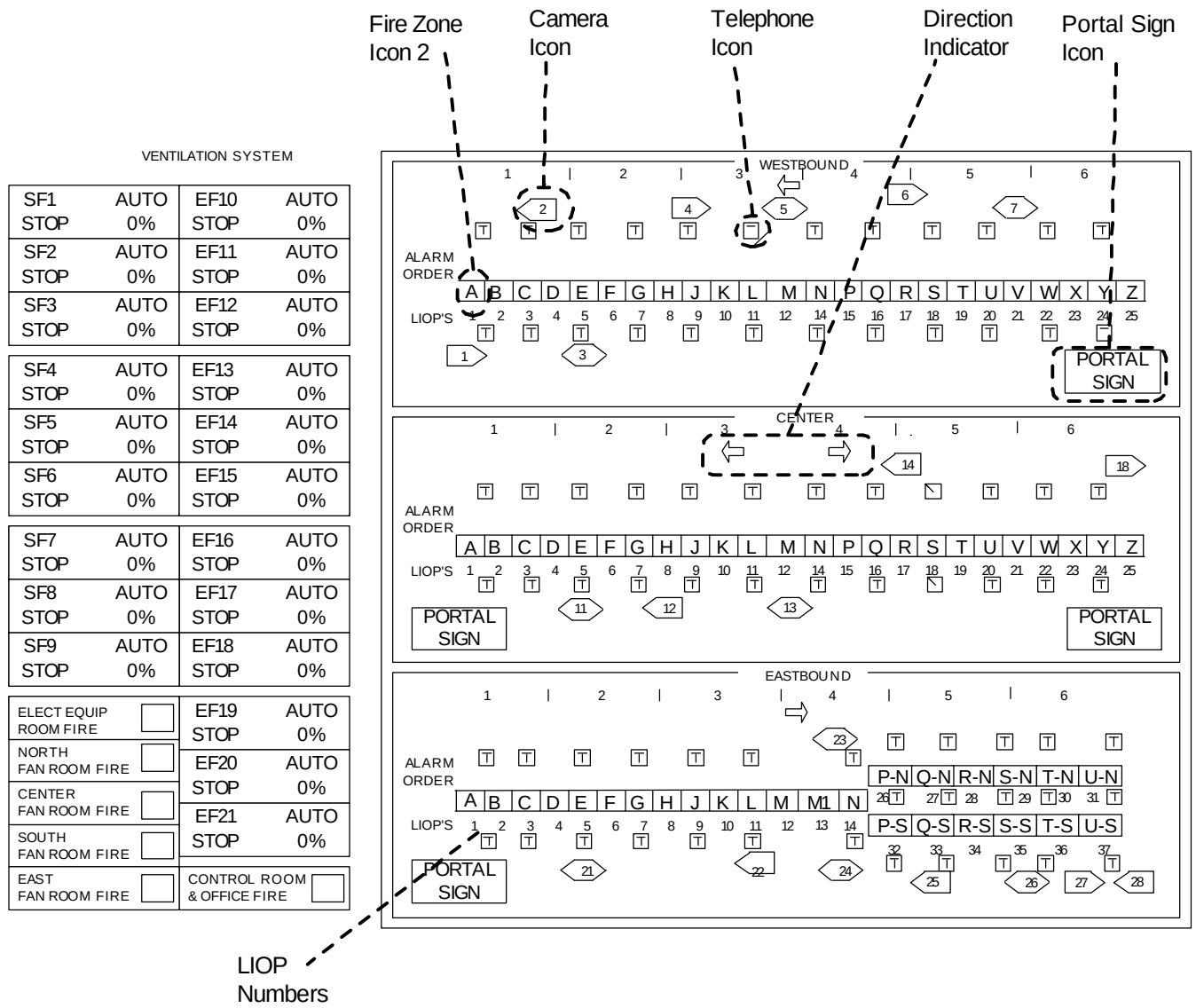

ACEx Technologies
VAX Upgrade Study
F15.vsd

Fire Screen

SEATTLE
UN 12, 1990
IME 15:54:49

SYSTEM MESSAGES

CONTROL FROM CONSOLE
OPERATOR JIM NORMAN

```
:35:32 0799 NOTE:  Event No. 1201 has been cleared.
:35:32 0799 NOTE:  Event No. 1203 has been cleared.
:36:00 0799 NOTE:  Event No. 801 has been cleared.
:36:00 0799 NOTE:  Event No. 803 has been cleared.
:00:19 0444 WARNING (EF10):  Exhaust fan EF10 has been given a STOP
            signal but its damper D10 has not closed.
:00:19 0462 WARNING (SF4):  Supply fan SF4 has been given a STOP
            signal but its damper D4 has not closed.
:00:21 0488 WARNING (EF15):  Exhaust fan EF15 has been given a STOP
            signal but its damper D15 has not closed.
:00:35 0799 NOTE:  Event No. 488 has been cleared.
:00:39 0799 NOTE:  Event No. 444 has been cleared.
:00:39 0799 NOTE:  Event No. 462 has been cleared.
:30:27  983 Algorithm schedule change. (Y = ON / N = OFF)
            7 N, 8 Y, 11 Y
:00:22 0457 WARNING (EF13):  Exhaust fan EF13 has been given a STOP
            signal but its damper D13 has not closed.
:00:24 0494 WARNING (SF5):  Exhaust fan SF5 has been given a STOP
            signal but its damper D5 has not closed.
:00:42 0799 NOTE:  Event No. 457 has been cleared.
:00:42 0799 NOTE:  Event No. 494 has been cleared.
:06:40 0874 NOTE:  Duct lighting on
:11:14 0799 NOTE:  Event No. 874 has been cleared.
:00:20 0450 WARNING (SF1):  Supply fan SF1 has been given a STOP
            signal but its damper D1 has not closed.
:00:43 0799 NOTE:  Event No. 450 has been cleared.
:37:25 0801 NOTE:  WB "daytime" lts. on N. row are on, but ext.
            photocells (PE5 & 7) show these lts. not needed.
:37:25 1201 NOTE:  WB "daytime" lts. on S. row are on, but ext.
            photocells (PE5 & 7) show these lts. not needed.
:37:37 0799 NOTE:  Event No. 1200 has been cleared.
:32:53 0799 NOTE:  Event No. 801 has been cleared.
:32:53 0799 NOTE:  Event No. 1201 has been cleared.
:40:56 0700 WARNING:  I/O states in time out during call to svc$qio(m)
            in routine stomonitor2.c
```


```
            signal but its damper D1 has not closed.
:00:43 0799 NOTE:  Event No. 450 has been cleared.
:37:25 0801 NOTE:  WB "daytime" lts. on N. row are on, but ext.
            photocells (PE5 & 7) show these lts. not needed.
:37:25 1201 NOTE:  WB "daytime" lts. on S. row are on, but ext.
            photocells (PE5 & 7) show these lts. not needed.
:37:37 0799 NOTE:  Event No. 1200 has been cleared.
:32:53 0799 NOTE:  Event No. 801 has been cleared.
:32:53 0799 NOTE:  Event No. 1201 has been cleared.
:40:56 0700 WARNING:  I/O states in time out during call to svc$qio(m)
```


CAM 043
P/T/Z
POS 0 5

TELE	PLC
LIGHTS	RADIO
SIG-HD	ENTRY
PSIGNS	BKRS
UMS	XFMR
INCDNT	POWER
TDS	UPS
CO	GEN 1
UCR	GEN 2
W-FANS	W-FIRE
C-FANS	C-FIRE
E-FANS	E-FIRE
	SYSTEM

ACEx Technologies
VAX Upgrade Study
F16.vsd

System Messages

APPENDIX T-4

GRAPHICAL REPRESENTATION OF TUNNELS

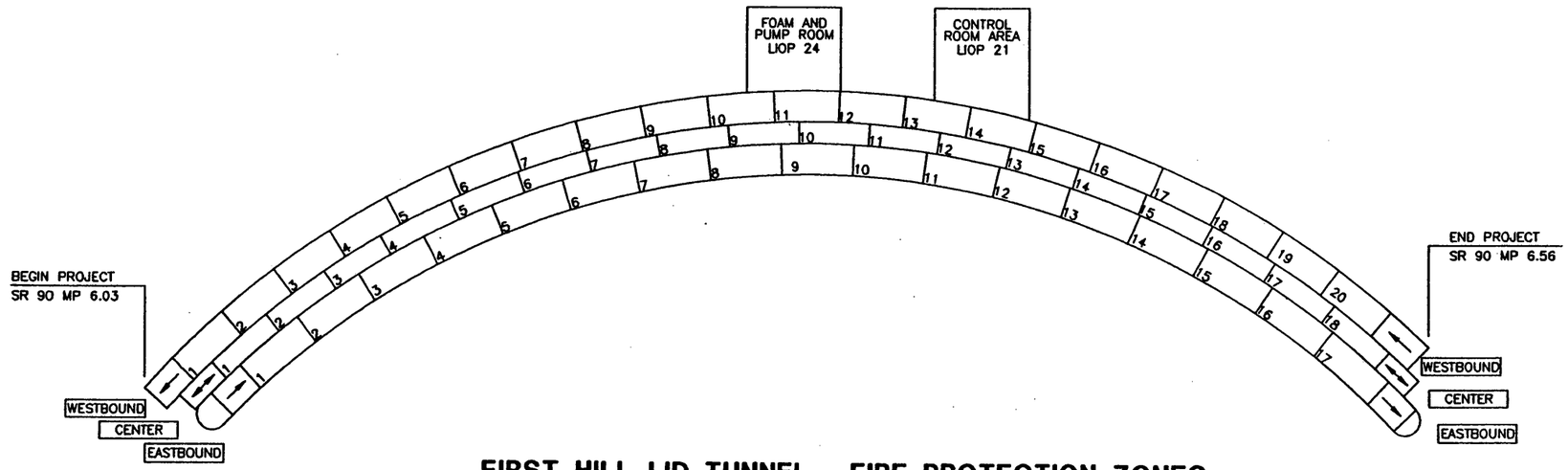

FIRST HILL LID TUNNEL - FIRE PROTECTION ZONES

(ABOVE ROADWAY)

FIRE ZONES / LIOP SCHEDULE
FIRST HILL LID TUNNEL

FIRE ZONE			LIOP
WB	CNTR	EB	
1	1	–	1
2	2	1	2
3	3	2	3
4	4	3	4
5	5	4	5
6	6	5	6
7	7	6	7
8	8	7	8
9	9	8	9
10	10	9	10
11	11	10	11
12	12	11	12
13	13	12	13
14	–	–	14
15	14	13	15
16	15	14	16
17	16	15	17
18	–	–	18
19	17	16	19
20	18	17	20

GLENN J. PAROLINI
STATE OF WASHINGTON
24075
REGISTERED
PROFESSIONAL ENGINEER
EXPIRES 7/10/02

Design Engr.					REGION NO.	STATE	FED. AID PROJ. NO.	SHEET NO.	TOTAL SHEETS
Supervisor	R. A. Matrisian				10	WASH			
Designed by	D. D. Anderson								
Checked by	K. R. Woolley								
Detailed by	M. R. Soper				JOB NUMBER 99A063				
Prelim. Design Engr.									
Preliminary Plan by					CONTRACT NO.				
Architect/Specialist	REVISION	BY	APP'D	DATE					

Washington State Department of Transportation

PB PARSONS BRINCKERHOFF

SR 5 & SR 90, DAYTON TSMC FACILITY
CONVENTION CTR, FIRST HILL & MT BAKER
TUNNEL FIRE PROTECTION SYSTEM UPGRADE

FIRST HILL LID TUNNEL
KEY PLAN

SHEET NO. FH1

SHEET 19 OF 38 SHEETS

SR ____ JOB NO. ____ SHEET ____ PLOTTING DATE : 05/24/2001

FILE NO. J:\18314S1\MECH.ALL\SHT\SHT-FH01.DWG

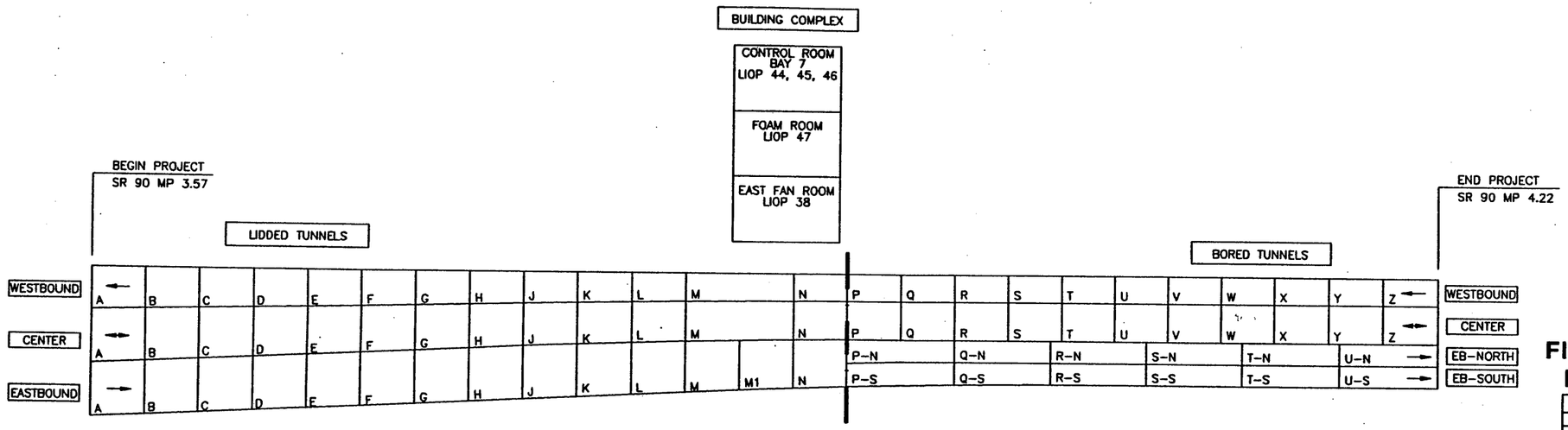

MT. BAKER RIDGE TUNNEL - FIRE PROTECTION ZONES

(ABOVE ROADWAY)

N

FIRE ZONE / LIOP SCHEDULE
MT. BAKER RIDGE TUNNEL

FIRE ZONE			LIOP
WB	CNTR	EB	
A	A	A	1
B	B	B	2
C	C	C	3
D	D	D	4
E	E	E	5
F	F	F	6
G	G	G	7
H	H	H	8
J	J	J	9
K	K	K	10
L	L	L	11
M	M	M	12
–	–	M1	13
N	N	N	14
P	P	–	15
Q	Q	–	16
R	R	–	17
S	S	–	18
T	T	–	19
U	U	–	20
V	V	–	21
WB	W	–	22
X	X	–	23
Y	Y	–	24
Z	Z	–	25
–	–	P-N	26
–	–	Q-N	27
–	–	R-N	28
–	–	S-N	29
–	–	T-N	30
–	–	U-N	31
–	–	P-S	32
–	–	Q-S	33
–	–	R-S	34
–	–	S-S	35
–	–	T-S	36
–	–	U-S	37

EXPIRES

Design Engr.					REGION NO.	STATE	FED. AID PROJ. NO.	SHEET NO.	TOTAL SHEETS
Supervisor R. A. Matrisian					10	WASH			
Designed by D. D. Anderson									
Checked by K. R. Woolley									
Detailed by M. R. Soper					JOB NUMBER 99A063				
Prelim. Design Engr.									
Preliminary Plan by					CONTRACT NO.				
Architect/Specialist	REVISION	BY	APP'D	DATE					

Washington State Department of Transportation

PB PARSONS BRINCKERHOFF

SR 5 & SR 90, DAYTON TSMC FACILITY CONVENTION CTR, FIRST HILL & MT BAKER TUNNEL FIRE PROTECTION SYSTEM UPGRADE

MT. BAKER RIDGE TUNNEL KEY PLAN

SHEET NO MB1

SHEET 11 OF 38 SHEETS

SR ____ JOB NO. ____ SHEET ____ PLOTTING DATE : 05/24/2001

FILE NO. J:\18314S1\MECH.ALL\SHT\SHT-MB01.DWG

APPENDIX T-5

SAMPLE REPORTS

Sample Reports

1. TDS Data Reports

A. One Hour Station Volume

STATION VOLUME REPORT

PERIOD ENDING	SET	TYPE DATA	0	1	2	3	4	5	6	7
22-MAR-2002 6:00:00	WB	STN.VOL.	STK_ON	EMPTY	EMPTY	EMPTY	STK_ON	EMPTY		
22-MAR-2002 7:00:00	WB	STN.VOL.	STK_ON	EMPTY	EMPTY	EMPTY	STK_ON	EMPTY		
22-MAR-2002 8:00:00	WB	STN.VOL.	STK_ON	EMPTY	EMPTY	EMPTY	STK_ON	EMPTY		
22-MAR-2002 9:00:00	WB	STN.VOL.	STK_ON	EMPTY	EMPTY	EMPTY	STK_ON	EMPTY		
22-MAR-2002 10:00:00	WB	STN.VOL.	STK_ON	EMPTY	EMPTY	EMPTY	STK_ON	EMPTY		

B. 5 Minute Traffic Data

5 MINUTE TRAFFIC DATA REPORT

PERIOD ENDING	STN.	TYPE DATA	Avg.VPH	Avg.Occ	Avg.Spd	His.VPH	His.Occ	His.Spd	HOCCDF	HOCCRD
17-MAR-2002 0:05:00	WB00	STN.AVG.	252	0.85	71	149	0.57	EMPTY	0.28	0.50
17-MAR-2002 0:10:00	WB00	STN.AVG.	260	1.00	73	176	0.83	EMPTY	0.17	0.20
17-MAR-2002 0:15:00	WB00	STN.AVG.	276	0.99	95	127	0.47	EMPTY	0.52	1.12
17-MAR-2002 0:20:00	WB00	STN.AVG.	244	0.72	70	163	0.60	EMPTY	0.12	0.20
17-MAR-2002 0:25:00	WB00	STN.AVG.	264	0.84	71	147	0.67	EMPTY	0.17	0.26
17-MAR-2002 0:30:00	WB00	STN.AVG.	200	0.76	80	113	0.37	EMPTY	0.40	1.08
17-MAR-2002 0:35:00	WB00	STN.AVG.	192	0.58	85	104	0.37	EMPTY	0.22	0.59
17-MAR-2002 0:40:00	WB00	STN.AVG.	236	0.76	90	95	0.33	EMPTY	0.43	1.29
17-MAR-2002 0:45:00	WB00	STN.AVG.	172	0.59	91	91	0.27	EMPTY	0.32	1.21
17-MAR-2002 0:50:00	WB00	STN.AVG.	164	0.58	91	114	0.47	EMPTY	0.12	0.25
17-MAR-2002 0:55:00	WB00	STN.AVG.	224	0.76	90	67	0.27	EMPTY	0.49	1.84
17-MAR-2002 1:00:00	WB00	STN.AVG.	148	0.50	82	46	0.17	EMPTY	0.34	2.01

C. 20 Second Individual Lane Data Report

20 SECOND INDIVIDUAL LANE TRAFFIC DATA REPORT

PERIOD ENDING		STN.	TYPE	DATA #	Lan.VPH	Lan.Occ	Lan.Spd	DLOCC	DOCCDL	HLOCC	HDLOCC	RDLOCC	His.VPH
24-MAR-2002	0:22:40	WB00	LANE	1	0	0.00	0	EMPTY	EMPTY	1.00	EMPTY	EMPTY	119.00
24-MAR-2002	0:23:00	WB00	LANE	1	0	0.00	0	EMPTY	EMPTY	1.00	EMPTY	EMPTY	119.00
24-MAR-2002	0:23:20	WB00	LANE	1	0	0.00	0	EMPTY	EMPTY	1.00	EMPTY	EMPTY	119.00
24-MAR-2002	0:23:40	WB00	LANE	1	180	1.40	58	EMPTY	EMPTY	1.00	EMPTY	EMPTY	119.00
24-MAR-2002	0:24:00	WB00	LANE	1	360	2.40	68	EMPTY	EMPTY	1.00	EMPTY	EMPTY	119.00
24-MAR-2002	0:24:20	WB00	LANE	1	180	1.20	68	EMPTY	EMPTY	1.00	EMPTY	EMPTY	119.00
24-MAR-2002	0:24:40	WB00	LANE	1	180	1.20	68	EMPTY	EMPTY	1.00	EMPTY	EMPTY	119.00
24-MAR-2002	0:25:00	WB00	LANE	1	360	2.80	58	EMPTY	EMPTY	0.50	EMPTY	EMPTY	85.00
24-MAR-2002	0:25:20	WB00	LANE	1	360	2.60	62	EMPTY	EMPTY	0.50	EMPTY	EMPTY	85.00
24-MAR-2002	0:25:40	WB00	LANE	1	0	0.00	0	EMPTY	EMPTY	0.50	EMPTY	EMPTY	85.00
24-MAR-2002	0:26:00	WB00	LANE	1	540	3.00	81	EMPTY	EMPTY	0.50	EMPTY	EMPTY	85.00
24-MAR-2002	0:26:20	WB00	LANE	1	720	5.00	65	EMPTY	EMPTY	0.50	EMPTY	EMPTY	85.00
24-MAR-2002	0:26:40	WB00	LANE	1	0	0.00	0	EMPTY	EMPTY	0.50	EMPTY	EMPTY	85.00
24-MAR-2002	0:27:00	WB00	LANE	1	360	1.70	91	EMPTY	EMPTY	0.50	EMPTY	EMPTY	85.00
24-MAR-2002	0:27:20	WB00	LANE	1	180	0.60	-131	EMPTY	EMPTY	0.50	EMPTY	EMPTY	85.00
24-MAR-2002	0:27:40	WB00	LANE	1	180	1.40	58	EMPTY	EMPTY	0.50	EMPTY	EMPTY	85.00
24-MAR-2002	0:28:00	WB00	LANE	1	360	2.60	62	EMPTY	EMPTY	0.50	EMPTY	EMPTY	85.00
24-MAR-2002	0:28:20	WB00	LANE	1	540	3.00	81	EMPTY	EMPTY	0.50	EMPTY	EMPTY	85.00
24-MAR-2002	0:28:40	WB00	LANE	1	180	0.50	-140	EMPTY	EMPTY	0.50	EMPTY	EMPTY	85.00
24-MAR-2002	0:29:00	WB00	LANE	1	0	0.00	0	EMPTY	EMPTY	0.50	EMPTY	EMPTY	85.00
24-MAR-2002	0:29:20	WB00	LANE	1	0	0.00	0	EMPTY	EMPTY	0.50	EMPTY	EMPTY	85.00
24-MAR-2002	0:29:40	WB00	LANE	1	0	0.00	0	EMPTY	EMPTY	0.50	EMPTY	EMPTY	85.00
24-MAR-2002	0:30:00	WB00	LANE	1	180	0.60	-131	EMPTY	EMPTY	0.40	EMPTY	EMPTY	42.00

D. Algorithm Features Report

ALGORITHM FEATURES REPORT

PERIOD ENDING		STN.	TYPE	DATA #	State	26	25	24
24-MAR-2002	0:38:00	WB00	ALG	0	0	EMPTY	EMPTY	EMPTY
24-MAR-2002	0:39:00	WB00	ALG	0	0	EMPTY	EMPTY	EMPTY
24-MAR-2002	0:40:00	WB00	ALG	0	0	EMPTY	EMPTY	EMPTY
24-MAR-2002	0:41:00	WB00	ALG	0	0	EMPTY	EMPTY	EMPTY
24-MAR-2002	0:42:00	WB00	ALG	0	0	EMPTY	EMPTY	EMPTY
24-MAR-2002	0:43:00	WB00	ALG	0	0	EMPTY	EMPTY	EMPTY
24-MAR-2002	0:44:00	WB00	ALG	0	0	EMPTY	EMPTY	EMPTY
24-MAR-2002	0:45:00	WB00	ALG	0	0	EMPTY	EMPTY	EMPTY
24-MAR-2002	0:46:00	WB00	ALG	0	0	EMPTY	EMPTY	EMPTY
24-MAR-2002	0:47:00	WB00	ALG	0	0	EMPTY	EMPTY	EMPTY
24-MAR-2002	0:48:00	WB00	ALG	0	0	EMPTY	EMPTY	EMPTY
24-MAR-2002	0:49:00	WB00	ALG	0	0	EMPTY	EMPTY	EMPTY
24-MAR-2002	0:50:00	WB00	ALG	0	0	EMPTY	EMPTY	EMPTY
24-MAR-2002	0:51:00	WB00	ALG	0	0	EMPTY	EMPTY	EMPTY
24-MAR-2002	0:52:00	WB00	ALG	0	0	EMPTY	EMPTY	EMPTY
24-MAR-2002	0:53:00	WB00	ALG	0	0	EMPTY	EMPTY	EMPTY
24-MAR-2002	0:54:00	WB00	ALG	0	0	EMPTY	EMPTY	EMPTY
24-MAR-2002	0:55:00	WB00	ALG	0	0	EMPTY	EMPTY	EMPTY
24-MAR-2002	0:56:00	WB00	ALG	0	0	EMPTY	EMPTY	EMPTY
24-MAR-2002	0:57:00	WB00	ALG	0	0	EMPTY	EMPTY	EMPTY
24-MAR-2002	0:58:00	WB00	ALG	0	0	EMPTY	EMPTY	EMPTY
24-MAR-2002	0:59:00	WB00	ALG	0	0	EMPTY	EMPTY	EMPTY
24-MAR-2002	1:00:00	WB00	ALG	0	0	EMPTY	EMPTY	EMPTY

E. Prior Period Features Report

PRIOR PERIOD FEATURES REPORT

PERIOD ENDING		STN.	TYPE	DATA #	Pri.VPH	Pri.Occ	Pri.Spd	SPDTDF
24-MAR-2002	0:40:00	WB00	PRIOR	0	STK_ON	STK_ON	STK_ON	STK_ON
24-MAR-2002	0:40:00	WB00	PRIOR	1	STK_ON	STK_ON	STK_ON	STK_ON
24-MAR-2002	0:41:00	WB00	PRIOR	0	STK_ON	STK_ON	STK_ON	STK_ON
24-MAR-2002	0:41:00	WB00	PRIOR	1	STK_ON	STK_ON	STK_ON	STK_ON
24-MAR-2002	0:42:00	WB00	PRIOR	0	STK_ON	STK_ON	STK_ON	STK_ON
24-MAR-2002	0:42:00	WB00	PRIOR	1	STK_ON	STK_ON	STK_ON	STK_ON
24-MAR-2002	0:43:00	WB00	PRIOR	0	STK_ON	STK_ON	STK_ON	STK_ON
24-MAR-2002	0:43:00	WB00	PRIOR	1	STK_ON	STK_ON	STK_ON	STK_ON
24-MAR-2002	0:44:00	WB00	PRIOR	0	STK_ON	STK_ON	STK_ON	STK_ON
24-MAR-2002	0:44:00	WB00	PRIOR	1	STK_ON	STK_ON	STK_ON	STK_ON
24-MAR-2002	0:45:00	WB00	PRIOR	0	STK_ON	STK_ON	STK_ON	STK_ON
24-MAR-2002	0:45:00	WB00	PRIOR	1	STK_ON	STK_ON	STK_ON	STK_ON
24-MAR-2002	0:46:00	WB00	PRIOR	0	STK_ON	STK_ON	STK_ON	STK_ON
24-MAR-2002	0:46:00	WB00	PRIOR	1	STK_ON	STK_ON	STK_ON	STK_ON
24-MAR-2002	0:47:00	WB00	PRIOR	0	STK_ON	STK_ON	STK_ON	STK_ON
24-MAR-2002	0:47:00	WB00	PRIOR	1	STK_ON	STK_ON	STK_ON	STK_ON
24-MAR-2002	0:48:00	WB00	PRIOR	0	STK_ON	STK_ON	STK_ON	STK_ON
24-MAR-2002	0:48:00	WB00	PRIOR	1	STK_ON	STK_ON	STK_ON	STK_ON
24-MAR-2002	0:49:00	WB00	PRIOR	0	STK_ON	STK_ON	STK_ON	STK_ON
24-MAR-2002	0:49:00	WB00	PRIOR	1	STK_ON	STK_ON	STK_ON	STK_ON
24-MAR-2002	0:50:00	WB00	PRIOR	0	STK_ON	STK_ON	STK_ON	STK_ON
24-MAR-2002	0:50:00	WB00	PRIOR	1	STK_ON	STK_ON	STK_ON	STK_ON

F. Downstream Features Report

DOWNSTREAM FEATURES REPORT

PERIOD ENDING	STN.	TYPE	DATA #	DOCCP	DOCCP1	DOCC	OCCDF	OCCRDF	DOCCTD	DOCCTD1
22-MAR-2002 7:14:00	WB04	DOWN	1	EMPTY	EMPTY	EMPTY	STK_ON	STK_ON	EMPTY	EMPTY
22-MAR-2002 7:14:00	WB04	DOWN	2	EMPTY	EMPTY	EMPTY	STK_ON	STK_ON	EMPTY	EMPTY
22-MAR-2002 7:14:00	WB05	DOWN	0	STK_ON	STK_ON	STK_ON	EMPTY	EMPTY	STK_ON	STK_ON
22-MAR-2002 7:14:00	WB05	DOWN	1	EMPTY	EMPTY	EMPTY	EMPTY	EMPTY	EMPTY	EMPTY
22-MAR-2002 7:14:00	WB05	DOWN	2	EMPTY	EMPTY	EMPTY	EMPTY	EMPTY	EMPTY	EMPTY
22-MAR-2002 7:15:00	WB00	DOWN	0	EMPTY	EMPTY	EMPTY	EMPTY	EMPTY	EMPTY	EMPTY
22-MAR-2002 7:15:00	WB00	DOWN	1	EMPTY	EMPTY	EMPTY	EMPTY	EMPTY	EMPTY	EMPTY
22-MAR-2002 7:15:00	WB00	DOWN	2	EMPTY	EMPTY	EMPTY	EMPTY	EMPTY	EMPTY	EMPTY
22-MAR-2002 7:15:00	WB01	DOWN	0	STK_ON	STK_ON	STK_ON	EMPTY	EMPTY	STK_ON	STK_ON
22-MAR-2002 7:15:00	WB01	DOWN	1	EMPTY	EMPTY	EMPTY	EMPTY	EMPTY	EMPTY	EMPTY
22-MAR-2002 7:15:00	WB01	DOWN	2	EMPTY	EMPTY	EMPTY	EMPTY	EMPTY	EMPTY	EMPTY
22-MAR-2002 7:15:00	WB02	DOWN	0	EMPTY	EMPTY	EMPTY	EMPTY	EMPTY	EMPTY	EMPTY
22-MAR-2002 7:15:00	WB02	DOWN	1	STK_ON	STK_ON	STK_ON	EMPTY	EMPTY	STK_ON	STK_ON
22-MAR-2002 7:15:00	WB02	DOWN	2	EMPTY	EMPTY	EMPTY	EMPTY	EMPTY	EMPTY	EMPTY
22-MAR-2002 7:15:00	WB03	DOWN	0	EMPTY	EMPTY	EMPTY	EMPTY	EMPTY	EMPTY	EMPTY
22-MAR-2002 7:15:00	WB03	DOWN	1	EMPTY	EMPTY	EMPTY	EMPTY	EMPTY	EMPTY	EMPTY
22-MAR-2002 7:15:00	WB03	DOWN	2	STK_ON	STK_ON	STK_ON	EMPTY	EMPTY	STK_ON	STK_ON
22-MAR-2002 7:15:00	WB04	DOWN	0	EMPTY	EMPTY	EMPTY	STK_ON	STK_ON	EMPTY	EMPTY
22-MAR-2002 7:15:00	WB04	DOWN	1	EMPTY	EMPTY	EMPTY	STK_ON	STK_ON	EMPTY	EMPTY
22-MAR-2002 7:15:00	WB04	DOWN	2	EMPTY	EMPTY	EMPTY	STK_ON	STK_ON	EMPTY	EMPTY
22-MAR-2002 7:15:00	WB05	DOWN	0	STK_ON	STK_ON	STK_ON	EMPTY	EMPTY	STK_ON	STK_ON
22-MAR-2002 7:15:00	WB05	DOWN	1	EMPTY	EMPTY	EMPTY	EMPTY	EMPTY	EMPTY	EMPTY
22-MAR-2002 7:15:00	WB05	DOWN	2	EMPTY	EMPTY	EMPTY	EMPTY	EMPTY	EMPTY	EMPTY

2. Incident Summary Report

```
03/13/02 06:00:18  983 Algorithm schedule change. [Y = ON / N = OFF]
                       3 Y, 4 N, 7 Y, 9 N,10 Y
03/13/02 07:48:18  975  DETECTOR CHATTERING:      (EB0, LANE 3)
03/13/02 07:48:38  975  DETECTOR OKAY:      (EB0, LANE 3)
03/13/02 09:30:19  983 Algorithm schedule change. [Y = ON / N = OFF]
                       7 N, 8 Y,11 Y
03/13/02 16:00:19  983 Algorithm schedule change. [Y = ON / N = OFF]
                       2 Y, 3 N,10 N
03/13/02 18:30:19  983 Algorithm schedule change. [Y = ON / N = OFF]
                       2 N, 4 Y, 8 N, 9 Y,11 N
```

3. Equipment Failure Report

```
03/13/02 06:00:18  983 Algorithm schedule change. [Y = ON / N = OFF]
                       3 Y, 4 N, 7 Y, 9 N,10 Y
03/13/02 06:45:04 0875 NOTE:  Utilidor lighting on
03/13/02 07:08:02 0799 NOTE:  Event No. 875 has been cleared.
03/13/02 07:48:18  975  DETECTOR CHATTERING:      (EB0, LANE 3)
03/13/02 07:48:38  975  DETECTOR OKAY:      (EB0, LANE 3)
03/13/02 07:57:55 0875 NOTE:  Utilidor lighting on
03/13/02 08:22:48 0799 NOTE:  Event No. 875 has been cleared.
03/13/02 09:30:19  983 Algorithm schedule change. [Y = ON / N = OFF]
                       7 N, 8 Y,11 Y
03/13/02 11:28:46 0875 NOTE:  Utilidor lighting on
03/13/02 11:31:34 0799 NOTE:  Event No. 875 has been cleared.
03/13/02 13:11:53 0875 NOTE:  Utilidor lighting on
03/13/02 13:16:17 0799 NOTE:  Event No. 875 has been cleared.
03/13/02 16:00:19  983 Algorithm schedule change. [Y = ON / N = OFF]
                       2 Y, 3 N,10 N
03/13/02 18:30:19  983 Algorithm schedule change. [Y = ON / N = OFF]
                       2 N, 4 Y, 8 N, 9 Y,11 N
03/13/02 18:53:49 0032 WARNING (SF2):  DAMPER D2 is open--fan not running.
03/13/02 18:53:58 0799 NOTE:  Event No. 32 has been cleared.
03/13/02 18:53:59 0451 WARNING (SF2):  Supply fan SF2 has been given a STOP
                       signal but its damper D2 has not closed.
03/13/02 18:54:22 0799 NOTE:  Event No. 451 has been cleared.
```

5. 2 Hour Status Report

17-MAR-2002 22:52:54 OPERATOR: TED\

LIGHTING INTENSITY__

PE1	PE2	PE3	PE4	PE5	PE6	PE7	PE8_
31	40	8	10	0	44	0	14

W-N	W-S	CWN	CWS	CEN	CES	E-N	E-S_
N	N			N	N	N	N

CARBON MONOXIDE LEVELS__

AE1	AE2	AE3	AE11	AE12	AE13	AE14	AE21	AE22	AE23	AE24	AE25
0	10	0	2	0	0	2	0	3	0	0	-1

WESTBOUND TUNNEL VENTILATION FANS_

FAN NO.	SPD SPT	SPEED	VIB DE	VIB ODE	TEMP DE	TEMP ODE	TEMP MOT	RUN HR
SF1	20	0	0	0	42	43	81	940
SF2	20	0	0	4	42	41	80	920
SF3	20	0	0	0	40	194	78	2170
EF10	20	0	49	42	45	45	77	150
EF11	20	0	104	8	43	43	75	280
EF12	20	0	5	11	43	43	79	240

CENTER TUNNEL VENTILATION FANS_

FAN NO.	SPD SPT	SPEED	VIB DE	VIB ODE	TEMP DE	TEMP ODE	TEMP MOT	RUN HR
SF4	20	0	0	0	42	42	74	100
SF5	20	0	0	0	0	34	71	210
SF6	20	0	1	3	42	43	66	160
EF13	20	0	6	6	46	46	78	70
EF14	20	0	1	0	74	46	84	20
EF15	20	0	1	1	45	45	78	130

EASTBOUND TUNNEL VENTILATION FANS_

FAN NO.	SPD SPT	SPEED	VIB DE	VIB ODE	TEMP DE	TEMP ODE	TEMP MOT	RUN HR
SF7	20	0	6	12	42	43	78	970
SF8	20	0	29	3	38	42	80	3160
SF9	20	0	39	10	41	41	78	860
EF16	20	0	30	44	42	39	65	310
EF17	20	0	0	17	44	44	65	990
EF18	20	0	0	65	43	42	69	310
EF19	20	0	212	180	0	45	69	950
EF20	20	0	166	151	45	44	70	310
EF21	20	0	212	133	45	45	69	890

ELECTRICAL POWER_

	VOLT	AMP	WATT		VOLT	AMP	WATT_
LINE 1	13929V	8A	156KW	LINE 2	14163V	8A	151KW
GEN G1	0V	0A	0KW	GEN G2	0V	0A	0KW
US1A	469V	48A		US1B	475V	19A	
US2A	465V	141A		US2B	473V	152A	
US3A	472V	26A		US3B	476V	36A	

NOTE: For Ventilation Fans, -1 means sensor deactivated.

APPENDIX T-6

CONTROL ROOMS LAYOUTS

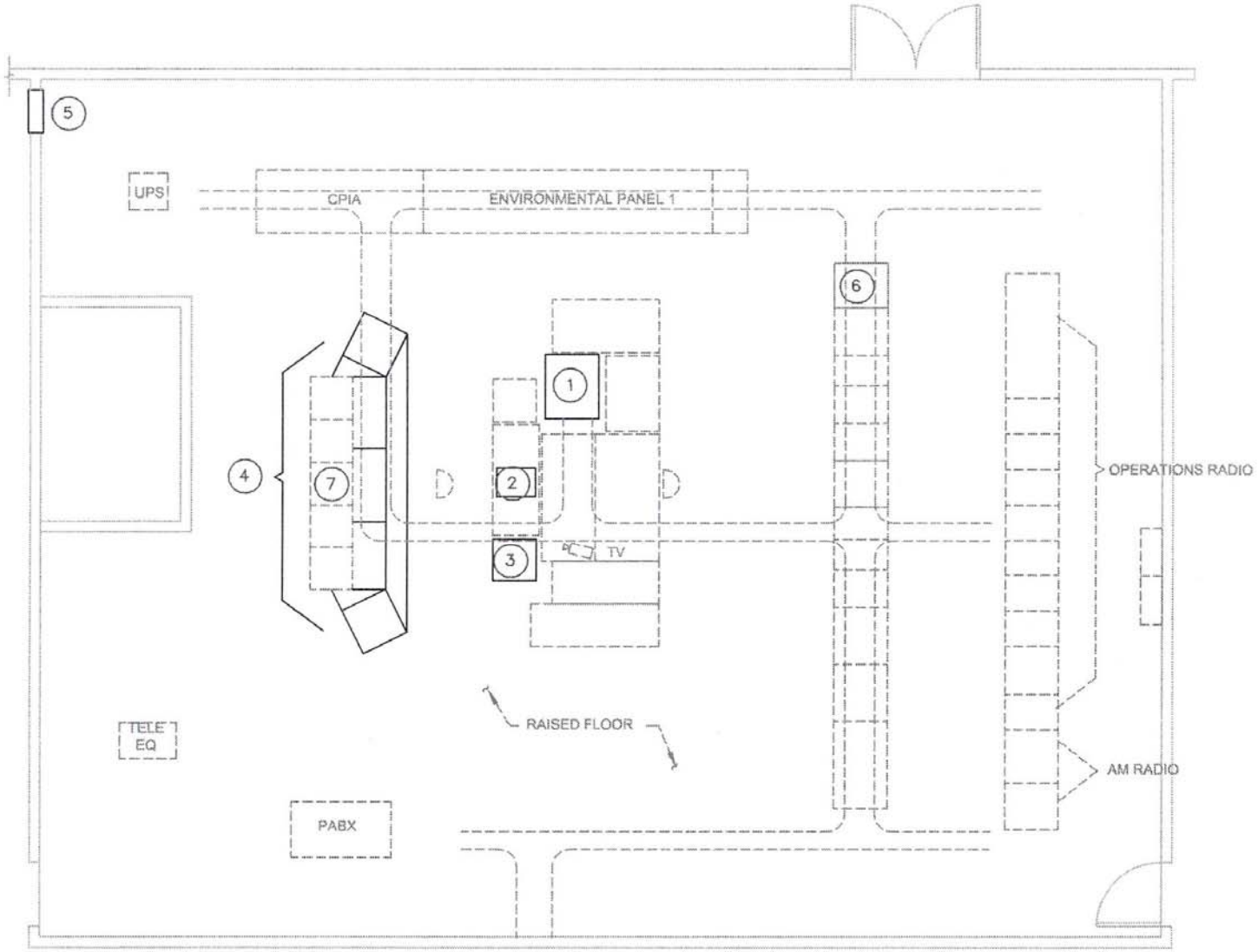

EQUIPMENT SCHEDULE

1 VAX <REMOVE>
2 ENG. WORK STATION <REMOVE>
3 PRINTER <REPLACE, REUSE STAND>
4 CONSOLE <REPLACE>
5 POWER PANEL <EXPAND AS NEEDED>
6 CABINET FOR TCCS EQUIPMENT <NEW>
7 CCTV MONITORS <REPLACE> OR <NIC>

FIRST HILL LID CONTROL ROOM - PRECONSTRUCTION

0 4' 8'

SCALE:

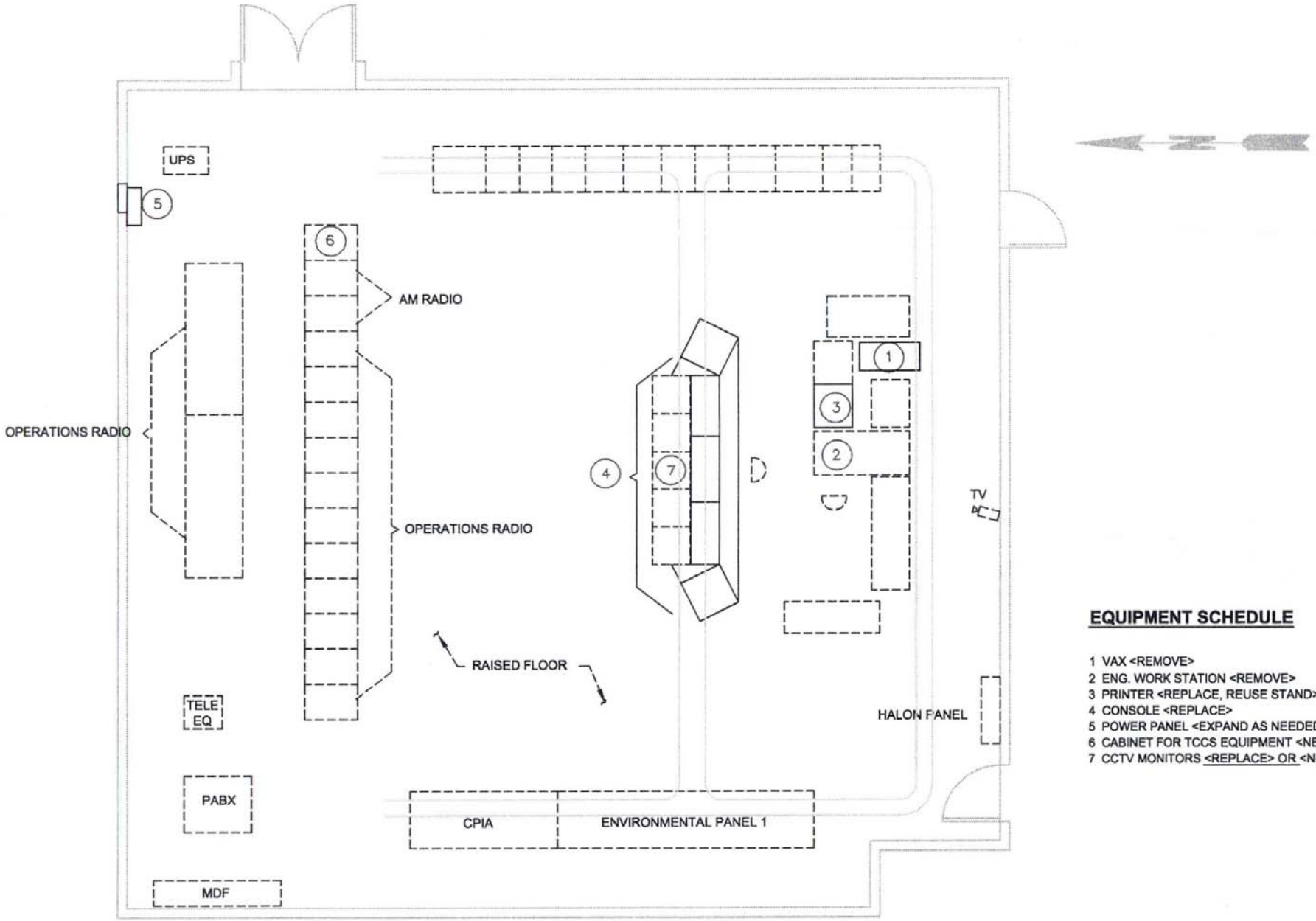

EQUIPMENT SCHEDULE

1 VAX <REMOVE>
2 ENG. WORK STATION <REMOVE>
3 PRINTER <REPLACE, REUSE STAND>
4 CONSOLE <REPLACE>
5 POWER PANEL <EXPAND AS NEEDED>
6 CABINET FOR TCCS EQUIPMENT <NEW>
7 CCTV MONITORS <REPLACE> OR <NIC>

MOUNT BAKER CONTROL ROOM - PRECONSTRUCTION

0 4' 8'

SCALE:

APPENDIX T-7

NEW WORKSTATIONS

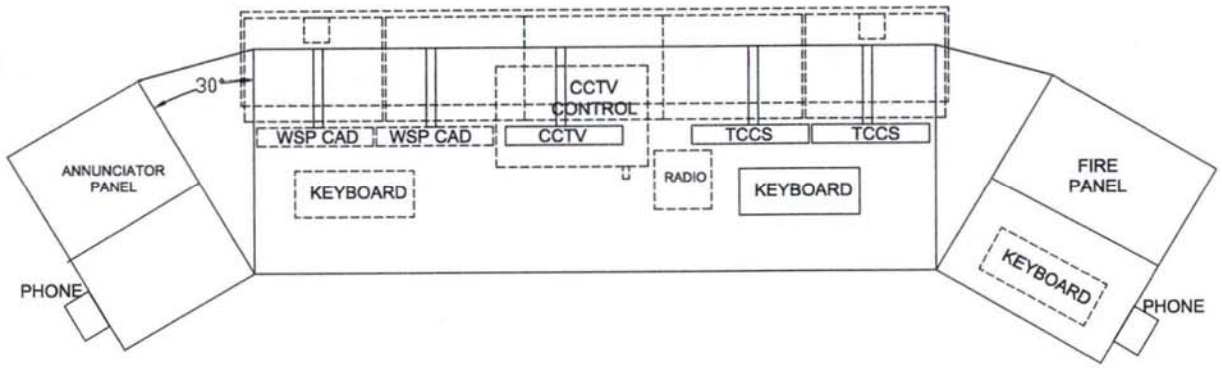

NOTES

1 EXISTING OR FUTURE EQUIPMENT IS SHOWN IN DASHED LINES
2 FIRE PANEL, ANNUNCIATOR PANEL, RADIO CONTROLLER, CCTV CONTROLLER, AND PHONES ARE EXISTING; CONTRACTOR SHALL REINSTALL AND RECONNECT THEM IN NEW CONSOLE (IN COORDINATION WITH OTHERS)
3 CABINET UNDER CONSOLE TOP CENTER SECTION SHALL BE SUFFICIENTLY LARGE TO MOUNT TWO MINI-TOWER COMPUTERS (8" x 17" x 17"). ROLLOUT SHELVES SHALL BE PROVIDED.
4 CABINET SECTIONS SHALL HAVE REMOVABLE COVER PANELS.
5 CONTRACTOR SHALL FURNISH AND INSTALL MONITOR MOUNTS AND MONITORS.
6 CONTRACTOR SHALL FURNISH AND INSTALL CCTV MONITOR AND CONNECT IT TO EXISTING SIGNAL CABLE.

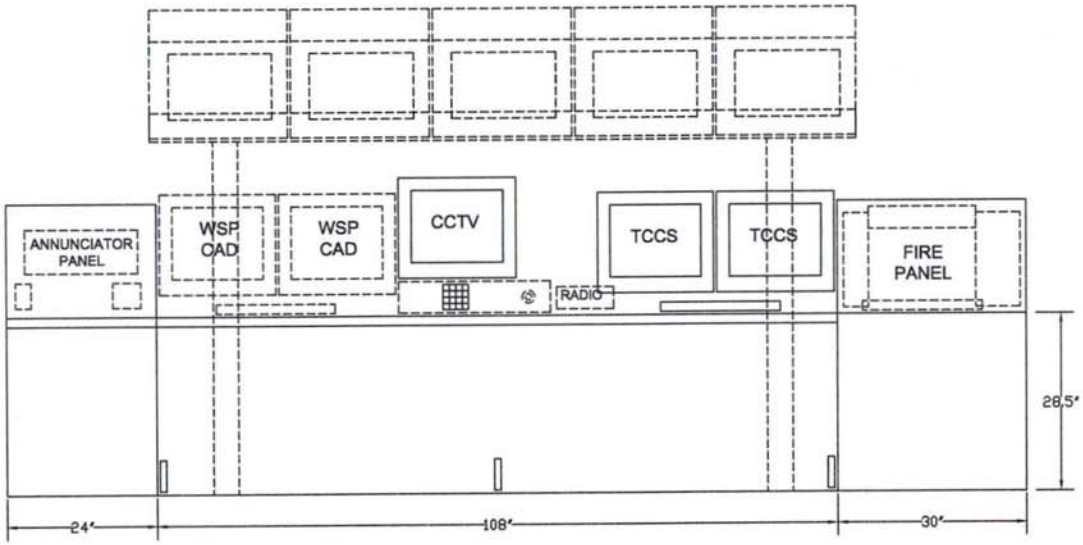

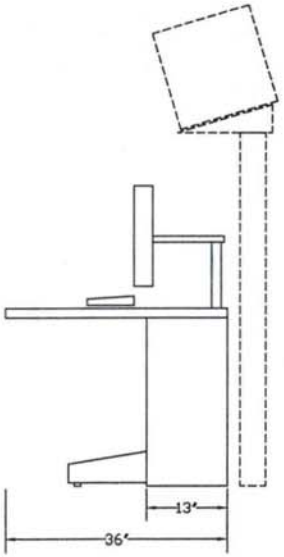

NEW TCCS CONSOLE

APPENDIX T-8

PLC DATA MAP AND DETAILS

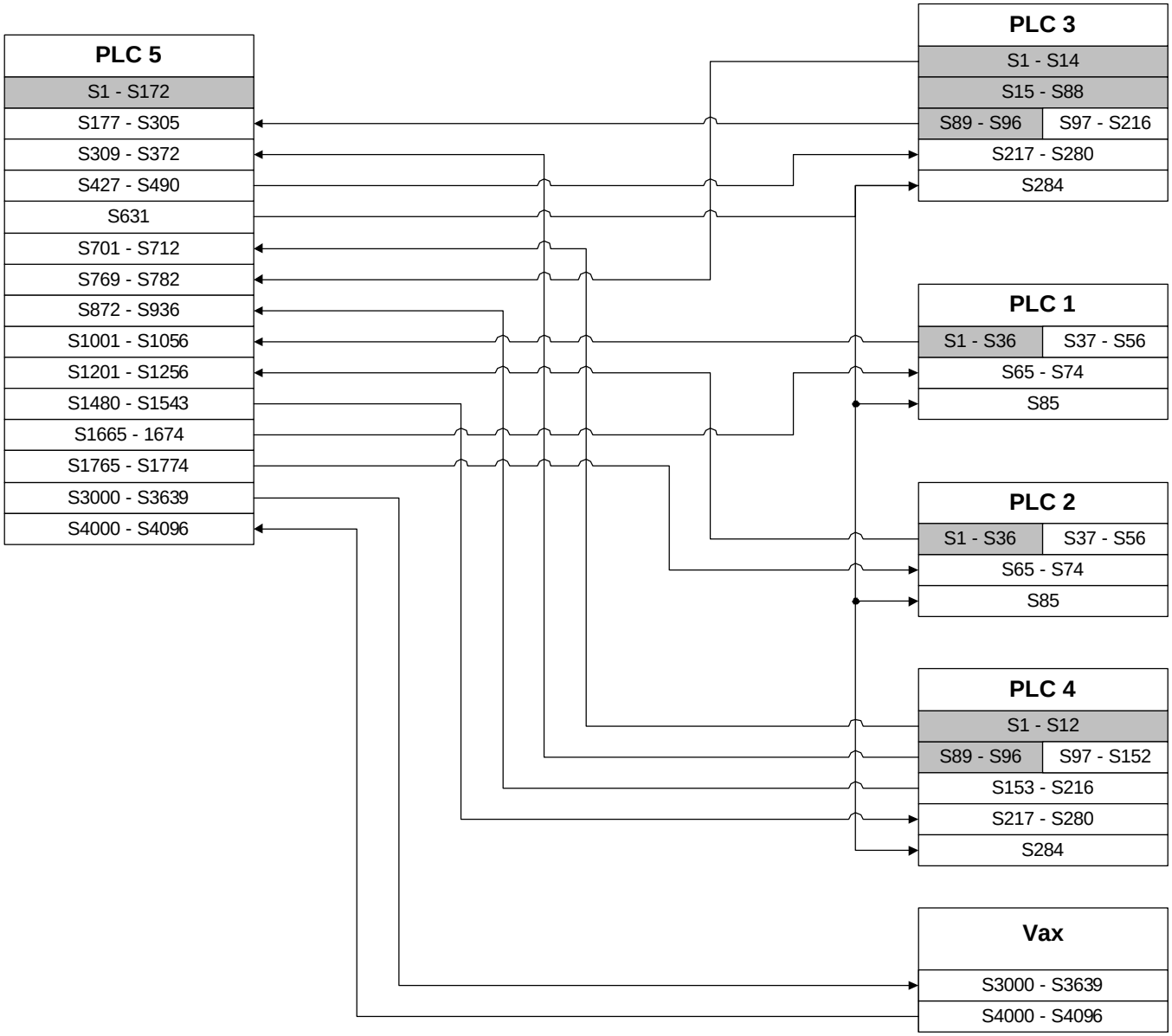

ACEx Technologies
VAX Upgrade Study
subtask 2C

Mt. Baker
PLC Communication Map

This diagram illustrates the communication between PLC 5 and the Vax, and between PLC 5 and the other PLC's. Real i/o registers are shaded. There is also communication directly amoung the other PLC's which is not shown. However, all information from the Vax to the other PLC's must go through the "write" registers in PLC 5 (i.e., S4000 - S4096). Likewise, the information from the other PLC's to the Vax must go through the read registers (i.e., S3000 - S3639). A detailed database of the read and write registers (for the Mt. Baker tunnel) is included in this report.

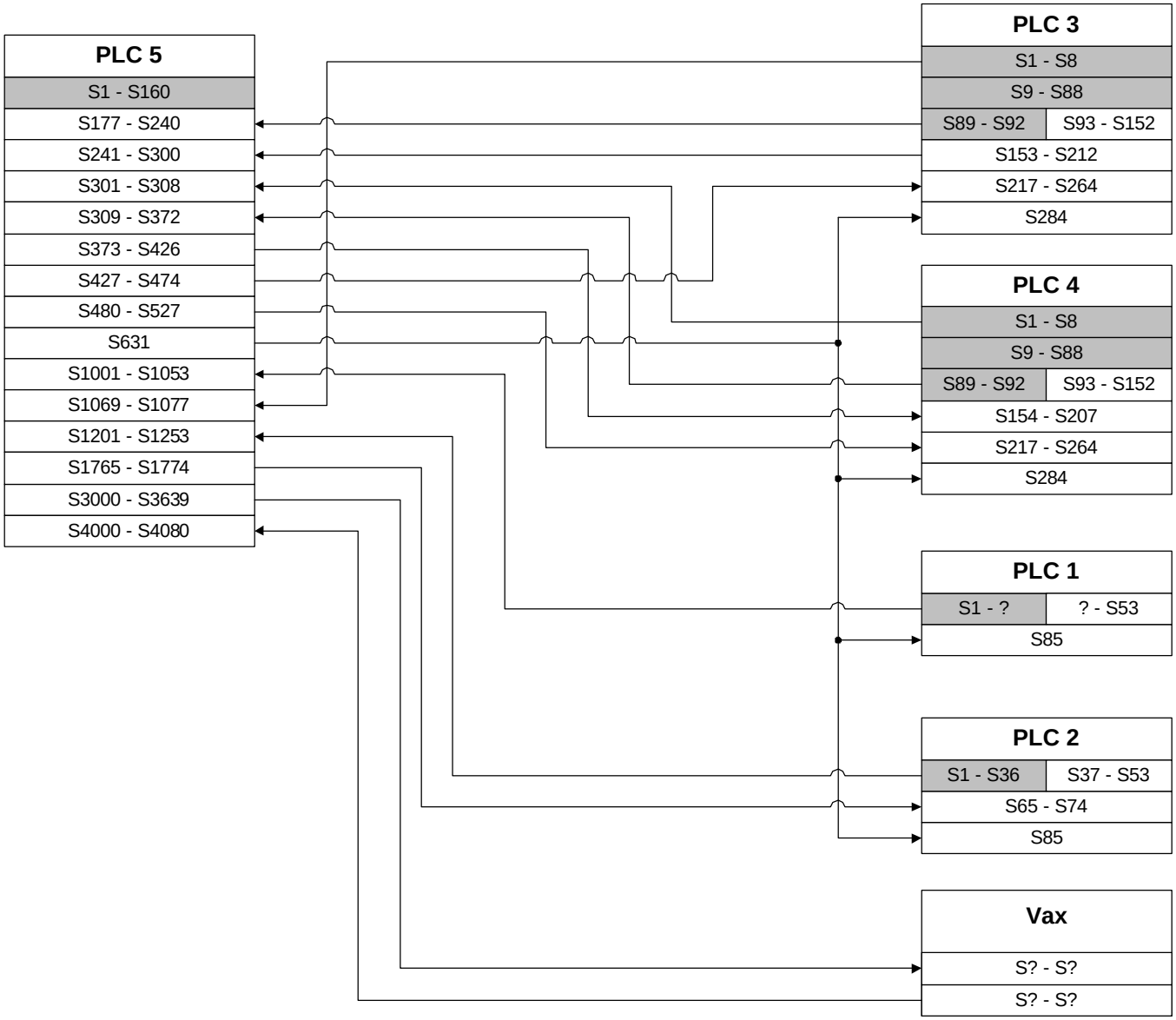

ACEx Technologies
VAX Upgrade Study
subtask 2C

Mercer Island
PLC Communication Map

This diagram illustrates the communication between PLC 5 and the Vax, and between PLC 5 and the other PLC's. Real i/o registers are shaded. There is also communication directly amoung the other PLC's which is not shown. However, all information from the Vax to the other PLC's must go through the "write" registers in PLC 5 (i.e., S4000 - S4096). Likewise, the information from the other PLC's to the Vax must go through the read registers (i.e., S3000 - S3639). A detailed database of the read and write registers (for the Mt. Baker tunnel) is included in this report.

APPENDIX T-9

SOURCE CODE FOR INCIDENT DETECTION

Incident Detection Documentation

Incident Detection

1. Perform time of day scheduling of algorithms.

2. Perform feature calculations.

3. Perform automatic station state altering.
   A. Disable all stations in direction of incident if incident.
   B. When incident clears, a counter is loaded for 'x' executions. After the counter is expired, re-enable the stations.

4. Determine for which stations algorithms should be executed.
   What determines a good station? Active, Mainline, Not Disabled, etc.

5. Perform algorithm execution for three current algorithms on all active stations.

6. Keep track of incident state. What should be done in the event of a state change?
   A. Non-incident to incident
      1. Determine lane of incident.
      2. Notify operator via event logger.
      3. Set alarm state for graphics.
   B. Incident to non-incident
      1. Notify operator via event logger.
      2. Reset alarm state for graphics.

Calling Tree

```
                INCDET
                  |
     ...............................................
     |          |          |          |
  SCHEDULE     FECALC        LNEDET       ALGEX
             /          \        |
            /            \       |
     ............... SORT_LANE   TREE
     |     |     |     |
  LNECLC  STNAVG  HLNCLC   RATIO
```

1. INCDET - incident detection driver routine
2. SCHEDL - scheduler for algorithms by time of day
3. FECAL - feature calculations
4. LNEDET - lane determination (low priority)
5. ALGEX - algorithm execution
6. TREE - traverses algorithm tree
7. LNECLC - calculates feature values by lane
8. STNAVG - calculates station average by volume, occupancy, and speed
9. HLNCLC - retrieve historic values from file
10. RATIO - calculate current/historical volume or occupancy ratio
11. SORT_LANE - saves order of item from smallest to lowest

APPENDIX T-10

TECHNICAL FEATURES RESPONSE FORM

TECHNICAL FEATURES RESPONSE FORM

SECTION	TITLE	COMPLY (Y/N)	EXCEPTIONS/CLARIFICATIONS	REFERENCE
3-1	**TCCS ARCHITECTURE**			
3-1.1	Network Configuration			
3-1.2	Equipment			
3-1.2.1	Workstations			
3-1.2.2	Server Computers			
3-1.2.3	Workstation, Server, Process Computers and Equipment			
3-1.2.4	Workstation Monitors			
3-1.2.5	Workstation Keyboard			
3-1.2.6	Workstation Mouse			
3-1.2.7	Printers			
3-1.2.8	Network Time Protocol Source			
3-1.2.9	Storage			
3-1.2.10	Uninterruptible Power Supply			
3-1.2.11	Rack Mounting			
3-1.2.12	Network Equipment			
3-1.2.13	Cabling			
3-1.3	Console			
3-1.4	Spare Units			
3-1.5	Software			
3-1.6	Environment			
3-1.6.1	Space			
3-1.6.2	Power			
3-1.6.3	Access			

TECHNICAL FEATURES RESPONSE FORM

SECTION	TITLE	COMPLY (Y/N)	EXCEPTIONS/CLARIFICATIONS	REFERENCE
3-2	**INTERFACE DISPLAYS**			
3-2.1	Navigation			
3-2.2	Colors			
3-2.3	Displays			
3-2.3.1	General			
3-2.3.2	Tunnel Geographic Displays			
3-2.3.3	System Displays			
3-2.3.4	Control/Status Displays			
3-2.3.5	Alarm and Event Displays			
3-2.3.6	Tabular Displays			
3-2.3.7	Historical Trend Displays			
3-3	**OPERATOR INTERFACE FUNCTIONS**			
3-3.1	Logon			
3-3.1.1	Display			
3-3.1.2	Control			
3-3.1.3	Data			
3-3.2	Alarm and Event Management			
3-3.2.1	Display			
3-3.2.2	Control			
3-3.2.3	Alarm and Event Data			
3-3.3	Traffic Data			
3-3.3.1	Display of Conditions			
3-3.3.2	Automatic Response			
3-3.3.3	Operator Controls			

TECHNICAL FEATURES RESPONSE FORM

SECTION	TITLE	COMPLY (Y/N)	EXCEPTIONS/CLARIFICATIONS	REFERENCE
3-3.3.4	Algorithm and Parameter Selection			
3-3.3.5	Data Connection Schematic			
3-3.4	Ventilation			
3-3.4.1	Display of Conditions			
3-3.4.2	Automatic Response			
3-3.4.3	Operator Controls			
3-3.4.4	Algorithm and Parameter Selection			
3-3.4.5	Data Connection Schematic			
3-3.5	Signs and Signal Heads			
3-3.5.1	Display of Conditions			
3-3.5.2	Automatic Response			
3-3.5.3	Operator Controls			
3-3.5.4	Algorithm and Parameter Selection			
3-3.5.5	Data Connection Schematic			
3-3.6	Power System			
3-3.6.1	Display of Conditions			
3-3.6.2	Operator Controls			
3-3.6.3	Data Connection Schematic			
3-3.7	Tunnel Lighting			
3-3.7.1	Display of Conditions			
3-3.7.2	Automatic Response			
3-3.7.3	Operator Controls			
3-3.7.4	Algorithm and Parameter Selection			
3-3.7.5	Data Connection Schematic			

TECHNICAL FEATURES RESPONSE FORM

SECTION	TITLE	COMPLY (Y/N)	EXCEPTIONS/CLARIFICATIONS	REFERENCE
3-3.8	Fire Management			
3-3.8.1	Display of Conditions			
3-3.8.2	Automatic Response			
3-3.8.3	Operator Controls			
3-3.8.4	Data Connection Schematic			
3-3.9	Carbon Monoxide			
3-3.9.1	Display of Conditions			
3-3.9.2	Operator Controls			
3-3.9.3	Data Connection Schematic			
3-3.10	CCTV and VCR			
3-3.10.1	Display of Conditions			
3-3.10.2	Automatic Response			
3-3.10.3	Operator Controls			
3-3.10.4	Algorithm and Parameter Selection			
3-3.10.5	Data Connection Schematic			
3-3.11	Reports			
3-3.11.1	Operations Summaries			
3-3.12	Emergency Telephones			
3-3.12.1	Display of Conditions			
3-3.12.2	Operator Controls			
3-3.12.3	Algorithm and Parameter Selection			
3-3.12.4	Data Connection Schematic			

TECHNICAL FEATURES RESPONSE FORM

SECTION	TITLE	COMPLY (Y/N)	EXCEPTIONS/CLARIFICATIONS	REFERENCE
3-4.1	Reporting			
3-4.1.1	Opertions Summaries			
3-4.1.2	Operations Analysis			
3-4.2	Managing TCCS			
3-4.2.1	Manage from Any Site			
3-4.2.2	Current Configuration Display			
3-4.2.3	TCCS Configuration Definition Maintenance			
3-4.2.4	System Configuration Management			
3-4.2.5	Workstation Display Maintenance			
3-4.2.6	Alarm Maintenance			
3-4.2.7	CCTV Scripts			
3-4.2.8	Report Definition and Production			
3-4.2.9	Storage Archive/Retrieval			
3-4.2.10	User Access and Priveleges			
3-4.2.11	Software Monitoring			
3-4.2.12	Equipment Diagnosis and Replacement			
3-4.3	Test and Simulation			
3-4.3.1	Operation			
3-4.3.2	Training Mode			
3-4.3.3	Test Mode			
3-4.3.4	History and Scripts			
3-5	**SUBSYSTEM COMMUNICATIONS INTERFACES**			
3-5.1	Programmable Logic Controller (PLC) Interface			
3-5.2	Fire Alarm Control Panel (FAP) Interface			

TECHNICAL FEATURES RESPONSE FORM

SECTION	TITLE	COMPLY (Y/N)	EXCEPTIONS/CLARIFICATIONS	REFERENCE
3-5.4	Traffic Data Stationh (TDS) Interface			
3-5.5	CCTV Controller Interface			
3-6	**PERFORMANCE**			
3-6.1	Input Rates			
3-6.2	Response Times			
3-6.3	Time Error			
3-6.4	Availability			
3-7	**DESIGN**			
3-7.1	Growth and Flexibility			
3-7.1.1	Size			
3.7.1.2	Addition of New Subsystems and Functionality			
3-8	**TESTING**			
3-8.1	Factory Functional and Performance Testing			
3-8.2	Installation Testing			
3-8.2.1	General			
3-8.2.2	Diagnostic Testing			
3-8.2.3	Funstional Testing			
3-8.2.4	Comprehensive Interface Testing			
3-8.2.5	Testing to Verify the System and Application Configuration			
3-8.2.6	I-90 Tunnel Integration Testing			
3-8.2.7	TCCS Performance Measurement and Testing			
3-8.2.8	Conditional Acceptance Testing			
3-8.2.9	Burn-In Testing and Final Acceptance			

TECHNICAL FEATURES RESPONSE FORM

SECTION	TITLE	COMPLY (Y/N)	EXCEPTIONS/CLARIFICATIONS	REFERENCE
3-10	**CONSTRAINTS FOR INTEGRATION TESTING AND CUTOVER**			
3-11	**TRAINING**			
3-11.1	Training Scope			
3-11.2	Training Plan			
3-11.3	Training Materials			
3-11.4	Location and Schedule of Training			
3-11.5	Instructor Materials			
3-12	**DESIGN SUBMITTALS**			
3-12.1	Draft Software Requirements Specifications			
3-12.2	Preliminary Design Review Submittal			
3-12.2.1	Updates of Proposal Material			
3-12.2.2	Software Requirements Specifications			
3-12.2.3	Software Design Description			
3-12.2.4	TCCS Equipment Preliminary Design Information			
3-12.2.5	Manufacturer Data Sheets			
3.12.3	Final Design Review			
3.12.3.1	Software Design Description			
3.12.3.2	TCCS Equipment Final Design Information			
3-13	**SOFTWARE AND USER DOCUMENTATION**			
3-13.1	Operator and Maintenance Manuals			
3-13.1.1	General			
3-13.1.2	Equipment Maintenance			
3-13.1.3	Tunnel Control Operation			
3-13.1.4	Simulator Use			

TECHNICAL FEATURES RESPONSE FORM

SECTION	TITLE	COMPLY (Y/N)	EXCEPTIONS/CLARIFICATIONS	REFERENCE
3-13.4.6	Software Operations and Maintenance			
3-13.2	Software Design Description - Final			