Washington State Department of Transportation

Memorandum

July 10, 2006

TO: Kinyan Lui / Erin Fletcher / MS 99

FROM: Chris Johnson / Nabil Dbaibo / MS 29

SUBJECT: SR-5, MP 176.14 to MP 177.10, XL-2827
5th Avenue NE to NE 92nd Street Noise Walls
Foundation Recommendations

As requested, we have completed the soils investigation for the SR-5, 5th Avenue NE to NE 92nd Street Noise Walls Project. It is our understanding that 4 noise wall barriers are proposed along the east and west sides of SR-5 between 5th Avenue NE and NE 92nd Street. The approximate walls location, length and height are as follows:

- Wall 1 (East Wall) will be between NE 80th Street and NE 92nd Street along the east side of SR-5 and will be approximately 3,560 feet long with a maximum height of 14 feet.

- Wall 2 (West North Wall) will be between NE 85th Street and NE 92nd Street along the west side of SR-5 and will be approximately 1,970 feet long with a maximum height of 11 feet.

- Wall 3 (West Middle Wall) will be between NE 80th Street and NE 85nd Street along the west side of SR-5 and will be approximately 825 feet long with a maximum height of 16 feet.

- Wall 4 (West South Wall) will be between 5th Avenue NE and NE 80nd Street along the west side of SR-5 and will be approximately 1,500 feet long with a maximum height of 16 feet.

The conclusions and recommendations contained in this Memorandum are based on the project description, site conditions, as they existed at the time of our site visit, and subsurface information in our files. It is further assumed that the subsurface conditions as interpreted from the borings are representative of the subsurface conditions throughout the project area. If during construction, subsurface conditions are different from those encountered in the exploratory borings, we should be advised so that we can assist you and re-evaluate our recommendations.

Field Investigation

The field exploration program for the project consisted of drilling 25 test borings, performing penetration tests, and discretely sampling soil horizons. The information

obtained during the field exploration was used in conjunction with existing information obtained from the previous studies to characterize the subsurface conditions throughout the project area. The approximate boring locations are shown on the Boring Locations Plan Sheet. The logs of the borings are attached with this report and should be included in the contract documents.

The borings were drilled using a CME 850 track-mounted drill rig and a CME 45 skid rig. Test holes were advanced to a maximum depth of thirty two (32) feet below the ground surface using mud rotary drilling method. At each location, soil samples were obtained using a 2-inch OD, 1.4-inch ID split-spoon. Standard Penetration Tests (SPT), in general, were performed at approximately 5 ft intervals in the test borings in general accordance with ASTM Test Method D-1586. SPT values are obtained by driving the split-spoon sampler 18-inches into the soil with a 140-pound hammer using 30-inch drops. The number of blows required to achieve each 6 inches of penetration are recorded. The soil's SPT resistance, or N-value, is calculated as the number of blows required to achieve the final 12 inches of penetration. The drill rig is equipped with an automatic trip hammer to drive the split-spoon sampler. Disturbed soil samples recovered from the test holes were visually classified in the field using the Unified Soil Classification System (USCS) in general accordance with ASTM Test Method D-2488.

Site Soil Conditions

The soil conditions at the project site were interpreted from the exploratory borings performed along the proposed alignment, provided by your office. The boring locations are shown on the Boring Locations Plan Sheet.

The borings indicate that the site is generally underlain by layers of loose to medium dense and dense sandy silt and silty sand with gravel and traces of organics below a thin surficial layer of duff, organics and grasses. Generally the consistency of the soil appeared to increase with depth, as reflected by the higher penetration resistance.

Groundwater was encountered at depths varying between 10 to 30 feet below existing grades at the location of the borings. This water level appears to indicate perched groundwater conditions as no seepage was observed along the face of the cut slopes or the ditches along SR-5.

Recommendations

Based on the encountered soil conditions, the anticipated wind conditions and terrain as described in the Design Manual, Figure 1140-1, we recommend Standard Plans shaft foundations to support the proposed noise walls provided that the edge of shaft is setback at least 4 feet from the edge of the break-in-slope. If the edge of shaft is closer to the break-in-slope, than special foundation design will need to be performed by the Bridge and

Structures Office. Depending if the noise walls are cast-in-place or pre-cast concrete panels, Standard Plans Type 4 can be used for CIP walls or Type 11 can be used for pre-cast panel walls. We also recommend specifying in the Plan Sheets Type 4D or Type 11D (depending on the type of concrete panels used) and depth D-1, as shown in the depth tables in Standard Plans Sheets D-2.08.00 and D-2.36.00.

Construction Considerations

Loose and medium dense sandy silt and silty sand will be encountered during construction of the drilled shafts for the noise walls. Localized water seepage may also be encountered from the sandier soil layers and at the sandy silt layer interface. Stabilization measures might be required during shaft excavation, if excessive water is encountered or if caving conditions occur. These measures could include the use of temporary casing, and could involve the use of slurries to control shaft sidewall stability.

The base of the shaft borings should be cleaned from any loose soil before concrete placement. Excessive loose material left in the bottom of the shaft borings will increase the amount of shaft settlement that occurs resulting in wall distortion and cracking.

Although not encountered during our exploration program, cobbles and boulders may be encountered given the nature of the glacially deposited soils. The Contractor should be prepared to deal with large obstructions, such as cobbles and boulders, during construction.

Closure

We trust this information is sufficient at this time. If you have any questions regarding this Memorandum, please call Nabil Dbaibo at (206) 768-5905.

NTD:ntd

File: SR-5, XL-2827
Serial No: 06-126

CHRISTOPHER JAY JOHNSON
STATE OF WASHINGTON
37891
REGISTERED
PROFESSIONAL ENGINEER

EXPIRES 7/22/06

State of Washington
Engineering Geologist
1557
Licensed Geologist

7/11/06

Nabil T. Dbaibo

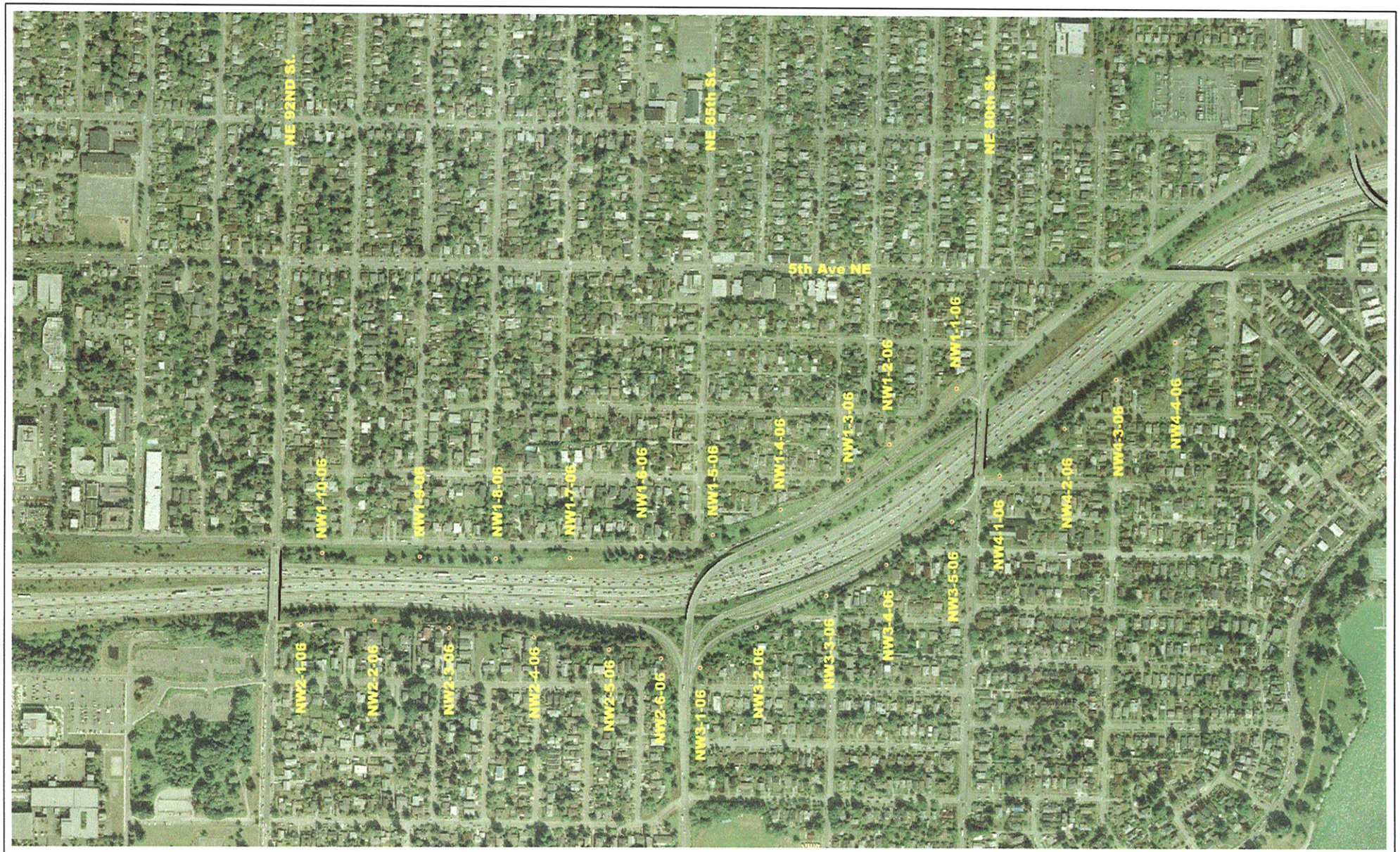

N

Not to Scale

I-5 5th Ave NE to NE 92nd St.-Noise Wall
BORING LOCATION PLAN
XL-2827 2006

...\XL2827-completeborings.dgn 7/11/2006 8:04:14 AM

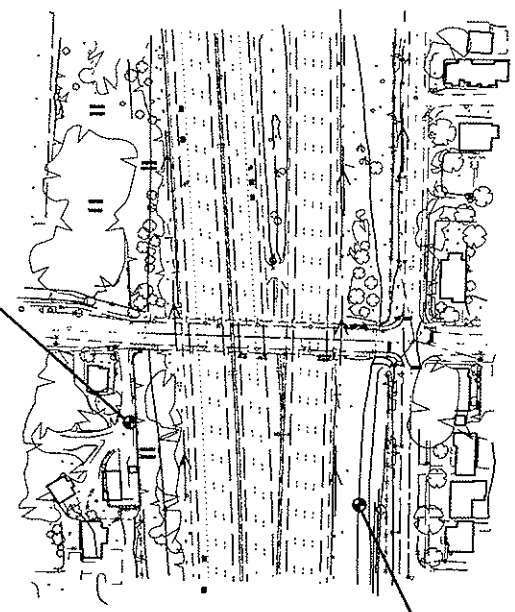

PROJECT 204010 SR 5 BOEING ACCESS RD TO NORTHGATE

204010_16_06.DGN

PHOTO DATE: 09/13/00

PHOTO SCALE: 1:5000

DATUM: NAD 83/91 NAVD 88

WASHINGTON STATE PLANE COORDINATE SYSTEM - NORTH ZONE

U.S. SURVEY FOOT

CALCE TRANSLATION TABLE PHOTO_03.TBL

FEATURE TABLE W4_0003.TBL

COMPILED BY 'Jason Goldstein' 12/09/04

WSDOT PHOTOGRAMMETRY

I-5 5th Ave NE to NE 92nd St.-Noise Wall
BORING LOCATION PLAN

XL2827 2006

...\XL2827_sht1boringloc.dgn 7/11/2006 11:12:59 AM

PROJECT 204010 SR 5 BOEING ACCESS RD TO NORTHGATE

204010.16.05.DGN

PHOTO DATE: 09/13/2000

PHOTO SCALE: 1:2000

DATUM: NAD 83/91 NAVD 88

WASHINGTON STATE PLANE COORDINATE SYSTEM - NORTH ZONE

U.S. SURVEY FOOT

CAICE TRANSLATION TABLE PHOTO.03.TBL

FEATURE TABLE VA.0002.TBL

COMPILED BY "Kichon Hammond" 12/03/04

VSDOT PHOTOGRAMMETRY

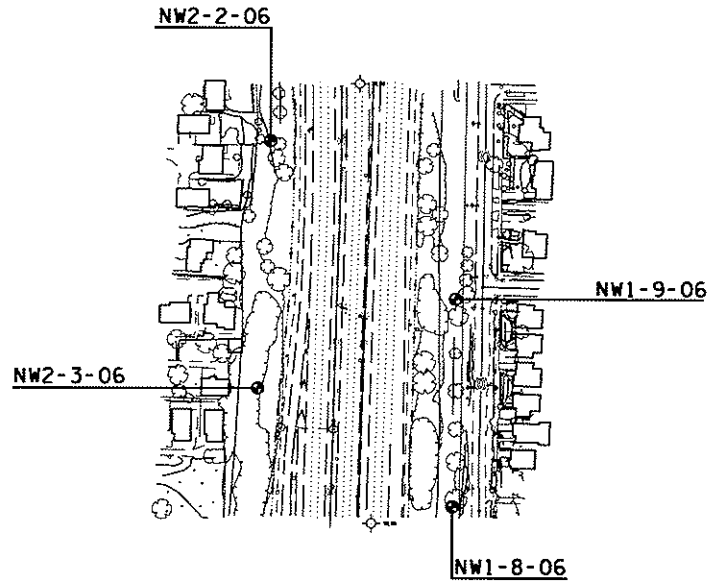

I-5 5th Ave NE to NE 92nd St.- Noise Wall

BORING LOCATION PLAN

XL2827 2006

...\XL2827_sht2boringloc.dgn 7/11/2006 11:13:41 AM

PROJECT 204010 SR 5 BOEING ACCESS RD TO NORTHGATE

204010.16_04.DGN

PHOTO DATE: 09/13/2000

PHOTO SCALE: 1=5000

DATUM: NAD 83/91 NAVD 88

WASHINGTON STATE PLANE COORDINATE SYSTEM - NORTH ZONE

U.S. SURVEY FOOT

CAICE TRANSLATION TABLE PHOTO.05.TBL

FEATURE TABLE WA.0002.TBL

COMPILED BY "Michael Hammond" 12/01/04

WSDOT PHOTOGRAMMETRY

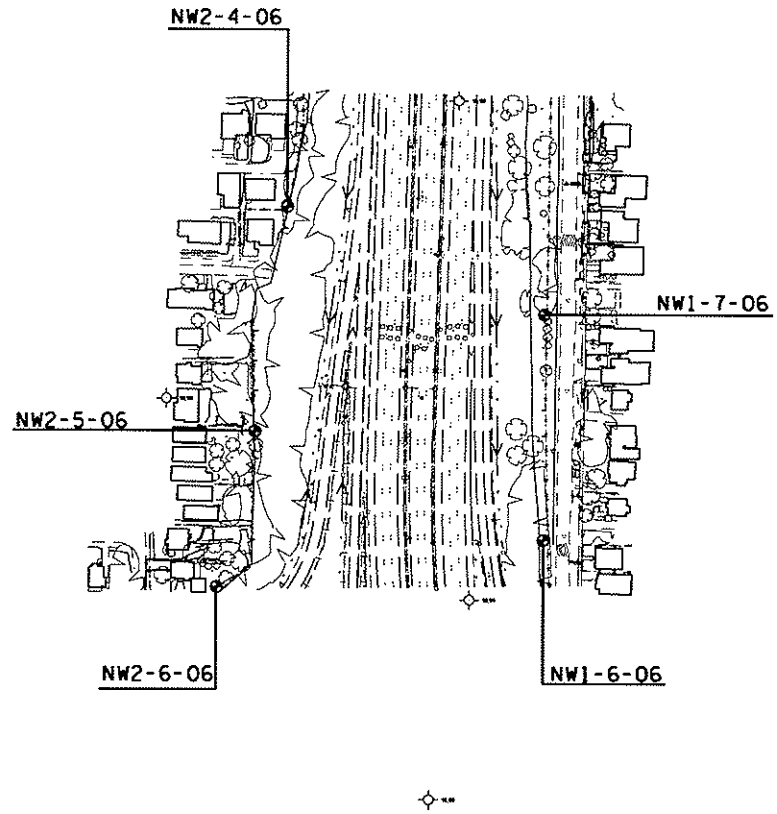

I-5 5th Ave NE to NE 92nd St.- Noise Wall

BORING LOCATION PLAN

XL2827 2006

H:\Microstation\XL2827-sht3.dgn 7/11/2006 11:11:41 AM

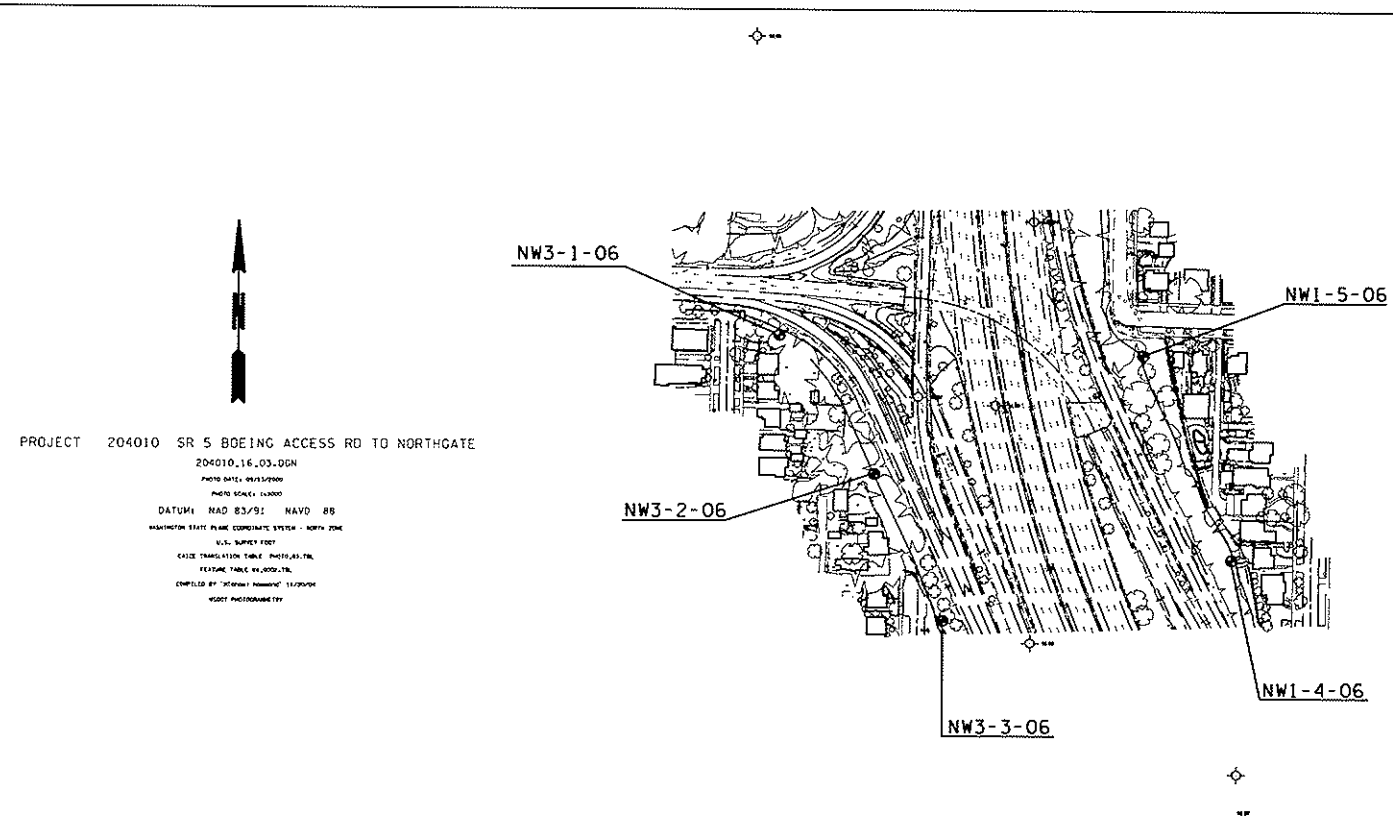

I-5 5th Ave NE to NE 92nd St.-Noise Wall
BORING LOCATION PLAN
XL2827 2006

...\XL2827_sht4boringloc.dgn 7/11/2006 11:10:32 AM

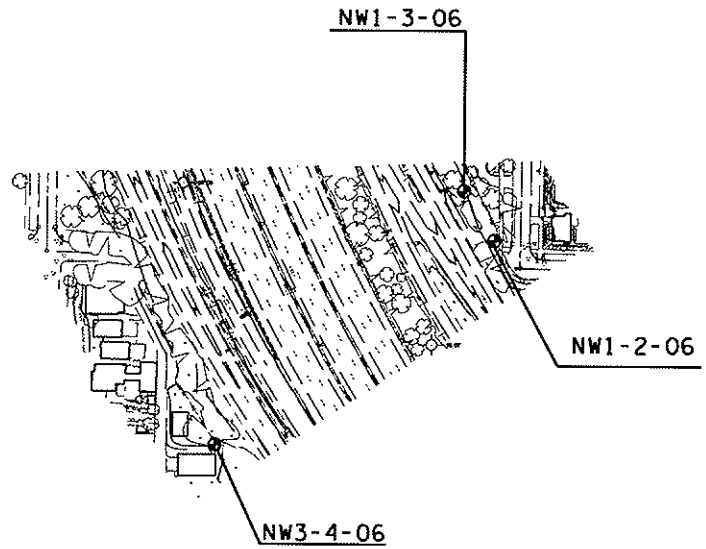

PROJECT 204010 SR 5 BOEING ACCESS RD TO NORTHGATE

204010_I5_07.DGN

PHOTO DATE: 09/13/2000

PHOTO SCALE: 1:3000

DATUM: NAD 83/91 NAVD 88

WASHINGTON STATE PLANE COORDINATE SYSTEM - NORTH ZONE

U.S. SURVEY FOOT

CAICE TRANSLATION TABLE PHOTO_05.TBL

FEATURE TABLE WA_0052.TBL

COMPILED BY "Michael Hammond" 11/17/04

WSDOT PHOTOGRAMMETRY

I-5 5TH Ave NE to NE 92nd St.-Noise Wall
BORING LOCATION PLAN

XL2827 2006

...\XL2827_sht5boringloc.dgn 7/11/2006 11:09:40 AM

PROJECT 204010 SR 5 BOEING ACCESS RD TO NORTHGATE

204010_15_06.DGN

DATUM: NAD 83/91 NAVD 88

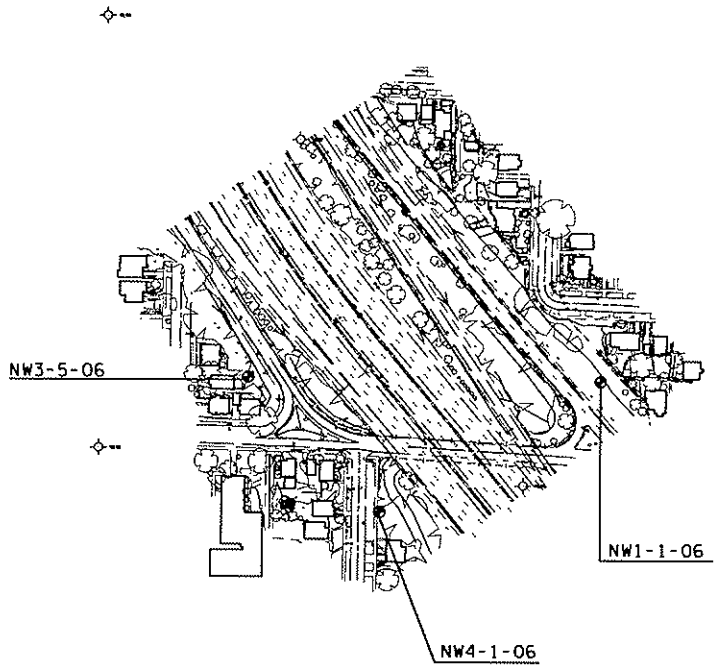

I-5 5th Ave NE to NE 92nd St.-Noise Wall
BORING LOCATION PLAN
XL2827 2006

...\XL2827_sht6boringloc.dgn 7/11/2006 11:09:02 AM

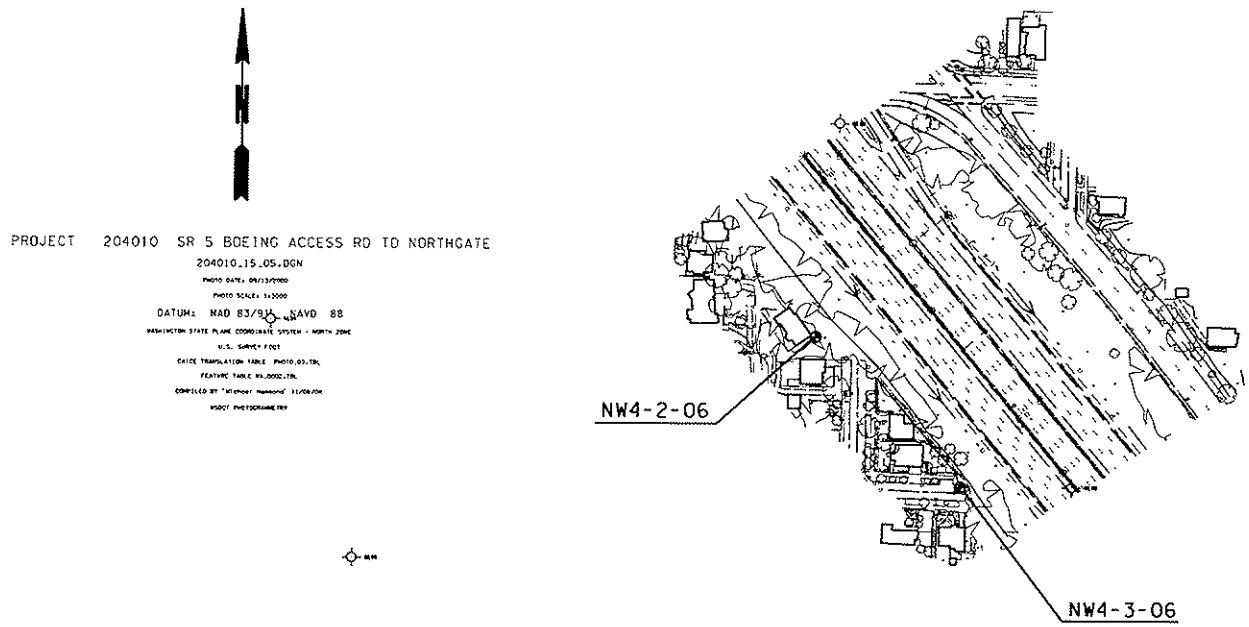

I-5 5th Ave NE to NE 92nd St. - Noise Wall
BORING LOCATION PLAN
XL2827 2006

...\XL2827_sht7boringloc.dgn 7/11/2006 11:08:35 AM

PROJECT 204010 SR 5 BOEING ACCESS RD TO NORTHGATE

204010_15_04.DGN

PHOTO DATE: 09/13/2000

PHOTO SCALE: 1:2000

DATUM: NAD 83/91 NAVD 88

WASHINGTON STATE PLANE COORDINATE SYSTEM - NORTH ZONE

U.S. SURVEY FEET

GATE TRANSLATION TABLE PHOTO_03.TBL

FEATURE TABLE V4_0000.TBL

COMPILED BY [illegible] 11/09/04

WSDOT PHOTOGRAMMETRY

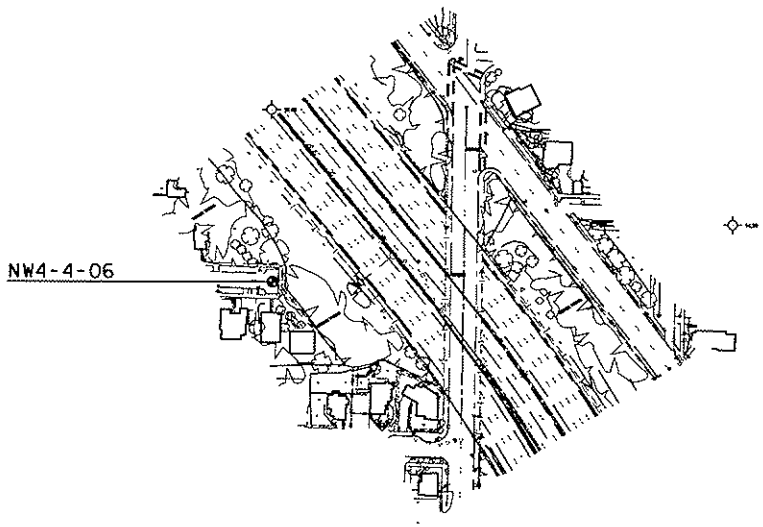

I-5 5th Ave NE to NE 92nd St. -Noise Wall

BORING LOCATION PLAN

XL2827 2006

...\XL2827_sht8boringloc.dgn 7/11/2006 11:07:46 AM

Washington State
Department of Transportation

LOG OF TEST BORING

Start Card SE01353

Job No. XL-2827 SR 5 Elevation 335.1 ft (102.1 m)

HOLE No. NW1-1-06

Sheet 1 of 2

Project I-5 5th Ave NE to NE 92nd St. - Noise Wall

Driller Jody Dickson Lic# 2637

Site Address Vic. of I-5 and 5th Ave NE to NE 92nd St

Inspector Donny Henderson

Start May 3, 2006 Completion May 3, 2006 Well ID# Equipment CME 850 w/ autohammer

Station Offset Casing HQ 3.5 Method Wet Rotary

Northing 254204 Easting 1273007 Latitude Longitude

County King Subsection NW 1/4 of the NW 1/4 Section 5 Range 4E Township 26

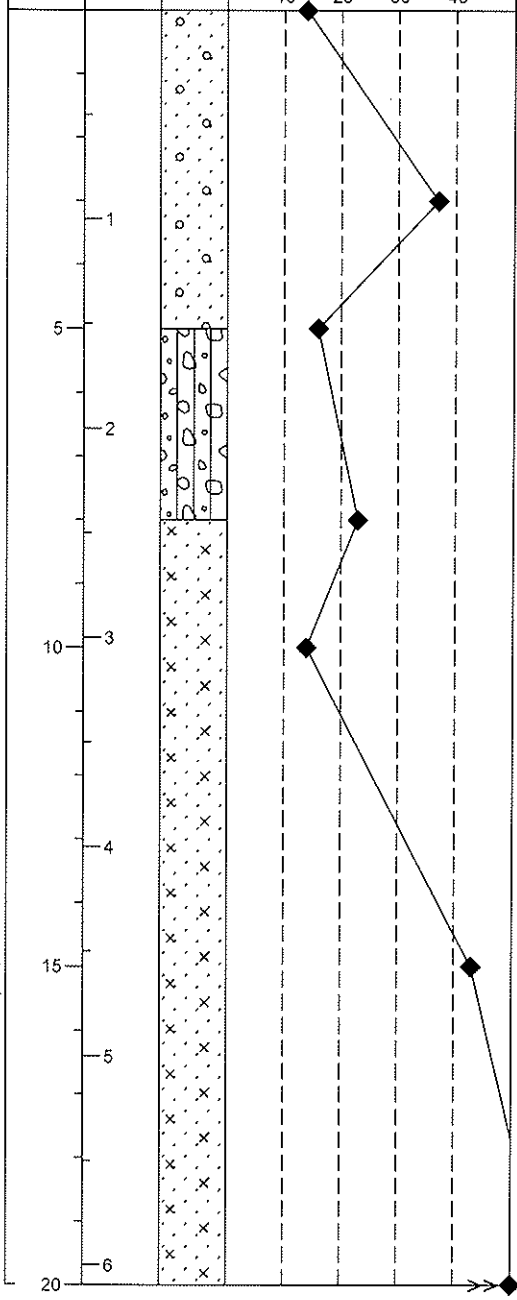

SPT Blows/6" (N)	Sample Type	Sample No. (Tube No.)	Lab Tests	Description of Material	Groundwater	Instrument
3 6 8 6 (14)		D-1		Silty SAND with gravel, trace organics, medium dense, brown, moist, Homogeneous, HCl reaction not tested. Length Recovered 1.6 ft, Length Retained 1.6 ft		
5 8 29 34 (37)		D-2		Silty SAND with gravel, dense, brown, moist, Homogeneous, HCl reaction not tested. Length Recovered 0.8 ft, Length Retained 0.8 ft		
3 5 11 24 (16)		D-3		Sandy SILT with gravel, trace organics, medium dense, brown, moist, Stratified, HCl reaction not tested, mixed soil colors and types, from 6.2' to 7.0' silty sand with gravel, with large gravel as indicated by drilling. Length Recovered 1.1 ft, Length Retained 1.1 ft		
11 11 12 11 (23)		D-4		Silty SAND with gravel, medium dense, brown, wet, Homogeneous, HCl reaction not tested, with large gravel as indicated by drilling. Length Recovered 0.8 ft, Length Retained 0.8 ft		
4 6 8 13 (14)		D-5		Silty SAND with gravel, medium dense, brown, moist, Stratified, HCl reaction not tested, sandy silt with gravel layers, with large gravel as indicated by drilling. Length Recovered 2.0 ft, Length Retained 2.0 ft		
17 22 21 25 (43)		D-6		Silty SAND with gravel, dense, brown, moist, Homogeneous, HCl reaction not tested, with large gravel as indicated by drilling. Length Recovered 1.8 ft, Length Retained 1.8 ft		

Washington State
Department of Transportation

LOG OF TEST BORING

Start Card SE01353

Job No. XL-2827 SR 5 Elevation 335.1 ft (102.1 m)

HOLE No. NW1-1-06

Sheet 2 of 2

Project I-5 5th Ave NE to NE 92nd St. - Noise Wall

Driller Jody Dickson Lic# 2637

Depth (ft)	Meters (m)	Profile	Standard Penetration Blows/ft (10 20 30 40)	SPT Blows/6" (N)	Sample Type	Sample No. (Tube No.)	Lab Tests	Description of Material	Groundwater	Instrument
				56/5 (56)		D-7		Silty SAND with gravel, very dense, brown, moist, Homogeneous, HCl reaction not tested, with large gravel as indicated by drilling. Length Recovered 0.5 ft, Length Retained 0.5 ft		
								End of test hole boring at 20.5 ft below ground elevation. This is a summary Log of Test Boring. Soil/Rock descriptions are derived from visual field identifications and laboratory test data.		
								No Free Water.		
25	7									
	8									
30	9									
	10									
35	11									
40	12									
	13									
45										

Washington State Department of Transportation

LOG OF TEST BORING

Start Card SE01353

Job No. XL-2827 SR 5 Elevation 329.9 ft (100.6 m)

HOLE No. NW1-2-06

Sheet 1 of 2

Project I-5 5th Ave NE to NE 92nd St. - Noise Wall

Driller Jody Dickson Lic# 2637

Site Address Vic. of I-5 and 5th Ave NE to NE 92nd St

Inspector Donny Henderson

Start May 3, 2006 Completion May 3, 2006 Well ID# Equipment CME 850 w/ autohammer

Station Offset Casing HQ 3.5 Method Wet Rotary

Northing 254522 Easting 1272742 Latitude Longitude

County King Subsection NW 1/4 of the NW 1/4 Section 5 Range 4E Township 26

Depth (ft)	Meters (m)	SPT Blows/6" (N)	Sample Type	Sample No. (Tube No.)	Lab Tests	Description of Material	Groundwater	Instrument
		2 3 5 3 (8)		D-1		Sandy SILT with gravel, loose, brown, moist, Homogeneous, HCl reaction not tested. Length Recovered 0.5 ft, Length Retained 0.5 ft		
	1	2 3 9 8 (12)		D-2		Sandy SILT with gravel, medium dense, brown, moist, Laminated,Fissured, HCl reaction not tested, silty sand layers. Length Recovered 1.2 ft, Length Retained 1.2 ft		
5		5 8 12 13 (20)		D-3		Sandy SILT with gravel, medium dense, brown, moist, Stratified, HCl reaction not tested, poorly graded sand layers, slightly silty. Length Recovered 2.0 ft, Length Retained 2.0 ft		
	2	7 9 10 10 (19)		D-4		Sandy SILT with gravel, medium dense, brown, moist, Laminated,Fissured, HCl reaction not tested, silty sand with gravel layers. Length Recovered 2.0 ft, Length Retained 2.0 ft		
10	3	6 11 13 15 (24)		D-5		Silty SAND with gravel, medium dense, brown, moist, Stratified, HCl reaction not tested, sandy silt with gravel layers. Length Recovered 2.0 ft, Length Retained 2.0 ft		
	4							
15	5	12 14 22 45 (36)		D-6		Silty SAND with gravel, dense, brown, moist, Homogeneous, HCl reaction not reported, with large gravel as indicated by drilling. Length Recovered 1.6 ft, Length Retained 1.6 ft		
20	6							

Standard Penetration Blows/ft: 10 20 30 40

SOIL XL-2827.GPJ SOIL.GDT 7/11/06 11:23:52 A7

Washington State
Department of Transportation

LOG OF TEST BORING

Start Card SE01353

Job No. XL-2827 SR 5 Elevation 329.9 ft (100.6 m)

HOLE No. NW1-2-06

Sheet 2 of 2

Project I-5 5th Ave NE to NE 92nd St. - Noise Wall

Driller Jody Dickson Lic# 2637

Depth (ft)	Meters (m)	Profile	Standard Penetration Blows/ft (10 20 30 40)	SPT Blows/6" (N)	Sample Type	Sample No. (Tube No.)	Lab Tests	Description of Material	Groundwater	Instrument
				28 43 42 27 (85)		D-7		Silty SAND with gravel, very dense, brown, moist, Homogeneous, HCl reaction not tested, with large gravel as indicated by drilling. Length Recovered 2.0 ft, Length Retained 2.0 ft		
	7							End of test hole boring at 22 ft below ground elevation. This is a summary Log of Test Boring. Soil/Rock descriptions are derived from visual field identifications and laboratory test data. No Free Water.		
25	8									
30	9									
35	10									
40	11									
	12									
45	13									

Washington State Department of Transportation

LOG OF TEST BORING

Start Card SE01353

Job No. XL-2827 SR 5 Elevation 315.6 ft (96.2 m)

HOLE No. NW1-3-06

Sheet 1 of 2

Project I-5 5th Ave NE to NE 92nd St. - Noise Wall

Driller Jody Dickson Lic# 2637

Site Address Vic. of I-5 and 5th Ave NE to NE 92nd St

Inspector Donny Henderson

Start May 4, 2006 Completion May 4, 2006 Well ID# Equipment CME 850 w/ autohammer

Station Offset Casing HQ 3.5 Method Wet Rotary

Northing 254716 Easting 1272571 Latitude Longitude

County King Subsection NW 1/4 of the NW 1/4 Section 5 Range 4E Township 26

Depth (ft)	Meters (m)	SPT Blows/6" (N)	Sample Type	Sample No. (Tube No.)	Lab Tests	Description of Material	Groundwater	Instrument
		4 4 5 4 (9)		D-1		Sandy SILT with gravel, trace organics, loose, brown, moist, Homogeneous, HCl reaction not tested, mixed soil colors Length Recovered 1.8 ft, Length Retained 1.8 ft		
	1	3 4 5 6 (9)		D-2		Silty SAND with gravel, trace organics, loose, brown, moist, Stratified, HCl reaction not tested, mixed soil colors and types, sandy silt with gravel layers Length Recovered 1.8 ft, Length Retained 1.8 ft		
5		3 2 1 1 (3)		D-3		Silty SAND with gravel, very loose, brown, wet, Homogeneous, HCl reaction not tested, trace organics Length Recovered 1.1 ft, Length Retained 1.1 ft		
	2	7 7 5 5 (12)		D-4		Silty SAND with gravel, medium dense, brown, moist, Stratified, HCl reaction not tested, mixed soil colors, poorly graded sand layers, sandy silt with gravel layers Length Recovered 1.7 ft, Length Retained 1.7 ft		
10	3	5 4 4 4 (8)		D-5		Silty SAND with gravel, loose, brown, moist, Stratified, HCl reaction not tested, sandy silt, mixed soil colors Length Recovered 2.0 ft, Length Retained 2.0 ft		
	4							
15	5	9 11 13 17 (24)		D-6		Sandy SILT, medium dense, gray, moist, Stratified, HCl reaction not tested, poorly graded sand layers Length Recovered 2.0 ft, Length Retained 2.0 ft	05/04/2006 05/04/2006	
20	6							

Standard Penetration Blows/ft: 10 20 30 40

SOIL XL-2827 GPJ SOIL.GDT 7/11/06 11:23:53 A7

Washington State Department of Transportation

LOG OF TEST BORING

Start Card SE01353

HOLE No. NW1-3-06

Job No. XL-2827 SR 5 Elevation 315.6 ft (96.2 m)

Sheet 2 of 2

Project I-5 5th Ave NE to NE 92nd St. - Noise Wall

Driller Jody Dickson Lic# 2637

Depth (ft)	Meters (m)	Profile	Standard Penetration Blows/ft (10 20 30 40)	SPT Blows/6" (N)	Sample Type	Sample No. (Tube No.)	Lab Tests	Description of Material	Groundwater	Instrument
				8 13 20 24 (33)		D-7		Sandy SILT, slightly elastic, dense, gray, moist, HCl reaction not tested, poorly graded sand layers Length Recovered 2.0 ft, Length Retained 2.0 ft		
25	7 8							End of test hole boring at 22 ft below ground elevation. This is a summary Log of Test Boring. Soil/Rock descriptions are derived from visual field identifications and laboratory test data.		
30	9									
35	10 11									
40	12									
45	13									

Washington State Department of Transportation

LOG OF TEST BORING

Start Card SE01353

HOLE No. NW1-4-06

Sheet 1 of 2

Job No. XL-2827 SR 5 Elevation 330.6 ft (100.8 m)

Project I-5 5th Ave NE to NE 92nd St. - Noise Wall

Driller Jody Dickson Lic# 2637

Site Address Vic. of I-5 and 5th Ave NE to NE 92nd St

Inspector Donny Henderson

Start May 4, 2006 Completion May 8, 2006 Well ID# Equipment CME 850 w/ autohammer

Station Offset Casing HQ 3.5 Method Wet Rotary

Northing 255036 Easting 1272429 Latitude Longitude

County King Subsection NW 1/4 of the NW 1/4 Section 5 Range 4E Township 26

Depth (ft)	Meters (m)	Profile	Standard Penetration Blows/ft (10 20 30 40)	SPT Blows/6" (N)	Sample Type	Sample No. (Tube No.)	Lab Tests	Description of Material	Groundwater	Instrument
				5 5 6 4 (11)		D-1		Sandy SILT with gravel, medium dense, brown, moist, Homogeneous, HCl reaction not tested. Length Recovered 0.5 ft, Length Retained 0.5 ft		
	1			4 2 2 3 (4)		D-2		Sandy SILT with gravel, very loose, brown, moist, Homogeneous, HCl reaction not tested, mixed soil colors. Length Recovered 0.9 ft, Length Retained 0.9 ft		
5				2 3 12 10 (15)		D-3		Sandy SILT with gravel, trace organics, medium dense, brown, wet, Stratified, HCl reaction not tested, silty sand with gravel layers. Length Recovered 1.1 ft, Length Retained 1.1 ft		
	2			6 7 10 11 (17)		D-4		Silty SAND with gravel, medium dense, brown, moist, Homogeneous, HCl reaction not tested, mixed soil colors. Length Recovered 1.3 ft, Length Retained 1.3 ft		
10	3			3 4 4 8 (8)		D-5		Silty SAND with gravel, loose, brown, moist, Stratified, HCl reaction not tested, sandy silt with gravel layers. Length Recovered 2.0 ft, Length Retained 2.0 ft		
	4									
15	5			4 6 10 14 (16)		D-6		Sandy SILT with gravel, medium dense, brown, moist, Stratified, HCl reaction not tested, silty sand layers throughout. Length Recovered 1.6 ft, Length Retained 1.6 ft		
20	6									

Washington State
Department of Transportation

LOG OF TEST BORING

Start Card SE01353

Job No. XL-2827 SR 5 Elevation 330.6 ft (100.8 m) HOLE No. NW1-4-06

Sheet 2 of 2

Project I-5 5th Ave NE to NE 92nd St. - Noise Wall Driller Jody Dickson Lic# 2637

Depth (ft)	Meters (m)	Profile	Standard Penetration Blows/ft (10 20 30 40)	SPT Blows/6" (N)	Sample Type	Sample No. (Tube No.)	Lab Tests	Description of Material	Groundwater	Instrument
				7 6 5 5 (11)		D-7		Silty SAND with gravel, medium dense, brown, wet, Stratified, HCl reaction not tested, sandy silt layers throughout. Length Recovered 1.3 ft, Length Retained 1.3 ft		
	7								05/08/2006 05/08/2006	
25				5 6 5 5 (11)		D-8		Silty SAND with gravel, medium dense, brown, moist, Stratified, HCl reaction not tested, from 26.0' to 27.0' sandy silt, gray, laminated, with poorly graded sand layers. Length Recovered 1.8 ft, Length Retained 1.8 ft		
	8									
								End of test hole boring at 27 ft below ground elevation. This is a summary Log of Test Boring. Soil/Rock descriptions are derived from visual field identifications and laboratory test data.		
	9									
30										
	10									
35										
	11									
	12									
40										
	13									
45										

Washington State Department of Transportation

LOG OF TEST BORING

Start Card SE01353

Job No. XL-2827 SR 5 Elevation 315.7 ft (96.2 m)

HOLE No. NW1-5-06

Sheet 1 of 2

Project I-5 5th Ave NE to NE 92nd St. - Noise Wall

Driller Jody Dickson Lic# 2637

Site Address Vic. of I-5 5th Ave NE to NE 92nd St

Inspector Donny Henderson

Start May 2, 2006 Completion May 3, 2006 Well ID# Equipment CME 850 w/ autohammer

Station Offset Casing HQ 3.5 Method Wet Rotary

Northing 255356 Easting 1272307 Latitude Longitude

County King Subsection NW 1/4 of the NW 1/4 Section 5 Range 4E Township 26

Depth (ft)	Meters (m)	Profile	Standard Penetration Blows/ft (10 20 30 40)	SPT Blows/6" (N)	Sample Type	Sample No. (Tube No.)	Lab Tests	Description of Material	Groundwater	Instrument
				4 3 4 4 (7)		D-1		Sandy SILT with gravel, loose, brown, moist, Homogeneous, HCl reaction not tested, from 0.0' to 0.5' trace organics (roots). Length Recovered 1.4 ft, Length Retained 1.4 ft		
	1			4 3 4 4 (7)		D-2		Sandy SILT with gravel, loose, brown, moist, Homogeneous, HCl reaction not tested. Length Recovered 1.0 ft, Length Retained 1.0 ft		
5				1 2 1 2 (3)		D-3		Sandy SILT with gravel, trace organics, very loose, brown, moist, Homogeneous, HCl reaction not tested. Length Recovered 1.8 ft, Length Retained 1.8 ft		
	2			1 1 1 1 (2)		D-4		Sandy SILT with gravel, trace organics, very loose, brown, wet, Homogeneous, HCl reaction not tested. Length Recovered 1.7 ft, Length Retained 1.7 ft		
10	3			4 5 24 46 (29)		D-5		Silty SAND with gravel, dense, brown, wet, Homogeneous, HCl reaction not tested, with large gravel as indicated by drilling. Length Recovered 0.9 ft, Length Retained 0.9 ft		
	4									
15	5			7 3 5 6 (8)		D-6		Silty SAND with gravel, loose, gray/black, moist, Stratified, HCl reaction not tested, organic soil layers, poorly graded sand layers. Length Recovered 1.3 ft, Length Retained 1.3 ft		
20	6									

Washington State
Department of Transportation

LOG OF TEST BORING

Start Card SE01353

Job No. XL-2827 SR 5 Elevation 315.7 ft (96.2 m)

HOLE No. NW1-5-06

Sheet 2 of 2

Project I-5 5th Ave NE to NE 92nd St. - Noise Wall

Driller Jody Dickson Lic# 2637

Depth (ft)	Meters (m)	Profile	Standard Penetration Blows/ft (10 20 30 40)	SPT Blows/6" (N)	Sample Type	Sample No. (Tube No.)	Lab Tests	Description of Material	Groundwater	Instrument
				3 6 10 13 (16)		D-7		Sandy SILT, medium dense, gray, moist, Laminated , HCl reaction not tested, poorly graded sand layers. Length Recovered 1.6 ft, Length Retained 1.6 ft		
	7									
25				4 6 9 12 (15)		D-8		Sandy SILT, medium dense, gray, moist, Laminated, HCl reaction not tested, poorly graded sand layers. Length Recovered 2.0 ft, Length Retained 2.0 ft		
	8									
	9									
30				6 9 14 15 (23)		D-9		Sandy SILT, medium dense, gray, moist, Laminated, HCl reaction not tested, poorly graded sand layers. Length Recovered 2.0 ft, Length Retained 2.0 ft No Free Water.		
	10							End of test hole boring at 32 ft below ground elevation. This is a summary Log of Test Boring. Soil/Rock descriptions are derived from visual field identifications and laboratory test data.		
35										
	11									
	12									
40										
	13									
45										

Washington State Department of Transportation

LOG OF TEST BORING

Start Card SE01354

HOLE No. NW1-6-06

Sheet 1 of 2

Job No. XL-2827 SR 5 Elevation 314.6 ft (95.9 m)

Project I-5 5th Ave NE to NE 92nd St. - Noise Wall

Driller Jody Dickson Lic# 2637

Site Address Vic. of I-5 and 5th Ave NE to NE 92nd St

Inspector Donny Henderson

Start May 1, 2006 Completion May 1, 2006 Well ID# Equipment CME 850 w/ autohammer

Station Offset Casing HQ 3.5 Method Wet Rotary

Northing 255698 Easting 1272203 Latitude Longitude

County King Subsection SW 1/4 of the SW 1/4 Section 32 Range 4E Township 26

Depth (ft)	Meters (m)	Profile	Standard Penetration Blows/ft (10 20 30 40)	SPT Blows/6" (N)	Sample Type	Sample No. (Tube No.)	Lab Tests	Description of Material	Groundwater	Instrument
				2 4 7 6 (11)		D-1		Sandy SILT with gravel, trace organics, medium dense, brown, moist, Laminated , HCl reaction not tested, silty sand with gravel. Length Recovered 2.0 ft, Length Retained 2.0 ft		
	1			4 5 6 8 (11)		D-2		Silty SAND with gravel, medium dense, brown, moist, Homogeneous, HCl reaction not tested. Length Recovered 2.0 ft, Length Retained 2.0 ft		
5				5 7 6 8 (13)		D-3		Silty SAND with gravel, medium dense, brown, moist, Homogeneous, HCl reaction not tested. Length Recovered 2.0 ft, Length Retained 2.0 ft		
	2			5 5 6 6 (11)		D-4		Silty SAND with gravel, medium dense, brown, moist, Stratified, HCl reaction not tested, sandy silt with gravel layers. Length Recovered 1.8 ft, Length Retained 1.8 ft		
10	3			3 4 7 8 (11)		D-5		Sandy SILT with gravel, medium dense, brown, moist, Stratified, HCl reaction not tested, silty sand with gravel layers. Length Recovered 1.7 ft, Length Retained 1.7 ft		
	4									
15				4 9 10 14 (19)		D-6		Silty SAND with gravel, medium dense, brown, moist, Homogeneous, HCl reaction not tested. Length Recovered 1.7 ft, Length Retained 1.7 ft		
	5								05/01/2006 05/01/2006	
20	6			5 6		D-7		Silty SAND with gravel, medium dense, brown, moist, Homogeneous, HCl reaction not tested.		

SOIL XL-2827.GPJ SOIL.GDT 7/11/06 11:23:55 A7

Washington State
Department of Transportation

LOG OF TEST BORING

Start Card SE01354

Job No. XL-2827 SR 5 Elevation 314.6 ft (95.9 m)

HOLE No. NW1-6-06

Sheet 2 of 2

Project I-5 5th Ave NE to NE 92nd St. - Noise Wall

Driller Jody Dickson Lic# 2637

Depth (ft)	Meters (m)	Profile	Standard Penetration Blows/ft (10 20 30 40)	SPT Blows/6" (N)	Sample Type	Sample No. (Tube No.)	Lab Tests	Description of Material	Groundwater	Instrument
				10 12 (16)				Length Recovered 2.0 ft, Length Retained 2.0 ft		
								End of test hole boring at 21 ft below ground elevation. This is a summary Log of Test Boring. Soil/Rock descriptions are derived from visual field identifications and laboratory test data.		
25	7									
30	8									
35	9									
40	10									
45	11									
	12									
	13									

Washington State Department of Transportation

LOG OF TEST BORING

Start Card SE01354

HOLE No. NW1-7-06

Sheet 1 of 2

Job No. XL-2827 SR 5 Elevation 315.9 ft (96.3 m)

Project I-5 5th Ave NE to NE 92nd St. - Noise Wall

Driller Jody Dickson Lic# 2637

Site Address Vic. of I-5 and 5th Ave NE to NE 92nd St

Inspector Donny Henderson

Start May 1, 2006 Completion May 1, 2006 Well ID# Equipment CME 850 w/ autohammer

Station Offset Casing HQ 3.5 Method Wet Rotary

Northing 256034 Easting 1272194 Latitude Longitude

County King Subsection SW 1/4 of the SW 1/4 Section 32 Range 4E Township 26

Depth (ft)	Meters (m)	Profile	Standard Penetration Blows/ft (10 20 30 40)	SPT Blows/6" (N)	Sample Type	Sample No. (Tube No.)	Lab Tests	Description of Material	Groundwater	Instrument
				2 4 4 4 (8)		D-1		Silty SAND with gravel, trace organics, loose, brown/gray, moist, Homogeneous, HCl reaction not tested. Length Recovered 1.5 ft, Length Retained 1.5 ft		
	1			4 6 9 8 (15)		D-2		Sandy SILT with gravel, trace organics, medium dense, brown, moist, Homogeneous, HCl reaction not tested. Length Recovered 1.2 ft, Length Retained 1.2 ft		
5	2			2 3 7 7 (10)		D-3		Sandy SILT with organics, loose, brown, moist, Stratified, HCl reaction not tested, sandy silt with gravel layers. Length Recovered 1.1 ft, Length Retained 1.1 ft		
				3 4 5 4 (9)		D-4		Sandy SILT with gravel, trace organics, loose, gray/brown, moist, Homogeneous, HCl reaction not tested. Length Recovered 1.6 ft, Length Retained 1.6 ft		
10	3			1 1 2 2 (3)		D-5		Sandy SILT with organics, loose, brown, wet, Homogeneous, HCl reaction not tested. Length Recovered 1.6 ft, Length Retained 1.6 ft		
	4			1 1 1 1 (2)		D-6		Sandy SILT with organics, loose, brown, moist, Homogeneous, HCl reaction not tested. Length Recovered 1.7 ft, Length Retained 1.7 ft		
15	5			0 2 2 2 (4)		D-7		Elastic SILT with sand, soft, gray, wet, Stratified, HCl reaction not tested, from 14.0' to 14.5' organic soil, peat. Length Recovered 2.0 ft, Length Retained 2.0 ft		
20	6			2 3		D-8		Sandy SILT with gravel, loose, gray, wet, Stratified, HCl reaction not tested, silty sand with gravel layers.		

Washington State
Department of Transportation

LOG OF TEST BORING

Start Card SE01354

Job No. XL-2827 SR 5 Elevation 315.9 ft (96.3 m)

HOLE No. NW1-7-06

Sheet 2 of 2

Project I-5 5th Ave NE to NE 92nd St. - Noise Wall

Driller Jody Dickson Lic# 2637

Depth (ft)	Meters (m)	Profile	Standard Penetration Blows/ft (10 20 30 40)	SPT Blows/6" (N)	Sample Type	Sample No. (Tube No.)	Lab Tests	Description of Material	Groundwater	Instrument
				4 3 (7)				Length Recovered 2.0 ft, Length Retained 2.0 ft		
25	7 8			4 4 10 19 (14)		D-9		Silty SAND with gravel, medium dense, brown, moist, Homogeneous, HCl reaction not tested. Length Recovered 1.1 ft, Length Retained 1.1 ft 05/01/2006 05/01/2006		
30	9			9 11 12 38 (23)		D-10		Poorly graded SAND with gravel, medium dense, gray/brown, moist, Laminated, HCl reaction not tested, sandy silt layers. Length Recovered 1.5 ft, Length Retained 1.5 ft		
35 40 45	10 11 12 13							End of test hole boring at 31 ft below ground elevation. This is a summary Log of Test Boring. Soil/Rock descriptions are derived from visual field identifications and laboratory test data.		

Washington State Department of Transportation

LOG OF TEST BORING

Start Card SE01354

Job No. XL-2827 SR 5 Elevation 318.3 ft (97.0 m)

HOLE No. NW1-8-06

Sheet 1 of 2

Project I-5 5th Ave NE to NE 92nd St. - Noise Wall

Driller Jody Dickson Lic# 2637

Site Address Vic. of I-5 and 5th Ave NE to NE 92nd St

Inspector Donny Henderson

Start May 1, 2006 Completion May 1, 2006 Well ID# Equipment CME 850 w/ autohammer

Station Offset Casing HQ-3.5 Method Wet Rotary

Northing 256384 Easting 1272190 Latitude Longitude

County King Subsection SW 1/4 of the SW 1/4 Section 32 Range 4E Township 26

Depth (ft)	Meters (m)	Profile	Standard Penetration Blows/ft (10 20 30 40)	SPT Blows/6" (N)	Sample Type	Sample No. (Tube No.)	Lab Tests	Description of Material	Groundwater	Instrument
				2 3 6 11 (9)		D-1		Sandy SILT with gravel, trace organics, loose, brown, moist, Homogeneous, HCl reaction not tested. Length Recovered 1.1 ft, Length Retained 1.1 ft		
	1			9 10 17 13 (27)		D-2		Silty SAND with gravel, dense, brown, moist, Laminated , HCl reaction not tested, poorly graded sand layers. Length Recovered 1.7 ft, Length Retained 1.7 ft		
5				15 12 11 14 (23)		D-3		Poorly graded SAND with gravel, slightly silty, medium dense, brown, moist, Homogeneous, HCl reaction not tested. Length Recovered 1.5 ft, Length Retained 1.5 ft		
	2			8 13 13 12 (26)		D-4		Sandy SILT, dense, brown/gray, moist, Laminated, HCl reaction not tested, mixed soil colors. Length Recovered 2.0 ft, Length Retained 2.0 ft		
10	3			3 4 5 6 (9)		D-5		Sandy SILT, slightly elastic, loose, gray/brown, wet, Homogeneous, HCl reaction not tested. Length Recovered 1.0 ft, Length Retained 1.0 ft		
	4									
15	5			7 11 15 18 (26)		D-6		Sandy SILT, dense, gray, moist, Homogeneous, HCl reaction not tested. Length Recovered 2.0 ft, Length Retained 2.0 ft	05/01/2006 05/01/2006	
20	6									

SOIL XL-2827 GPJ SOIL.GDT 7/11/06 11:23:57 A7

Washington State
Department of Transportation

LOG OF TEST BORING

Start Card SE01354

HOLE No. NW1-8-06

Sheet 2 of 2

Job No. XL-2827 SR 5 Elevation 318.3 ft (97.0 m)

Project I-5 5th Ave NE to NE 92nd St. - Noise Wall

Driller Jody Dickson Lic# 2637

Depth (ft)	Meters (m)	Profile	Standard Penetration Blows/ft (10 20 30 40)	SPT Blows/6" (N)	Sample Type	Sample No. (Tube No.)	Lab Tests	Description of Material	Groundwater	Instrument
				9 15 19 25 (34)		D-7		Sandy SILT, dense, gray, moist, Laminated, HCl reaction not tested, poorly graded sand layers. Length Recovered 2.0 ft, Length Retained 2.0 ft		
25	7							End of test hole boring at 22 ft below ground elevation. This is a summary Log of Test Boring. Soil/Rock descriptions are derived from visual field identifications and laboratory test data.		
	8									
30	9									
35	10									
40	11									
	12									
45	13									

Washington State Department of Transportation

LOG OF TEST BORING

Start Card SE01354

Job No. XL-2827 SR 5 Elevation 320.0 ft (97.5 m)

HOLE No. NW1-9-06

Sheet 1 of 2

Project I-5 5th Ave NE to NE 92nd St. - Noise Wall

Driller Jody Dickson Lic# 2637

Site Address Vic. of I-5 and 5th Ave NE to NE 92nd St

Inspector Donny Henderson

Start May 2, 2006 Completion May 2, 2006 Well ID# Equipment CME 850 w/ autohammer

Station Offset Casing HQ 3.5 Method Wet Rotary

Northing 256745 Easting 1272197 Latitude Longitude

County King Subsection SW 1/4 of the SW 1/4 Section 32 Range 4E Township 26

Depth (ft)	Meters (m)	Profile	Standard Penetration Blows/ft (10 20 30 40)	SPT Blows/6" (N)	Sample Type	Sample No. (Tube No.)	Lab Tests	Description of Material	Groundwater	Instrument
				3 8 9 8 (17)		D-1		Sandy SILT with gravel, medium dense, brown/gray, moist, Homogeneous, HCl reaction not tested, trace of organics 0.0' to 0.5'. Length Recovered 1.2 ft, Length Retained 1.2 ft		
	1			7 8 7 7 (15)		D-2		Sandy SILT with gravel, medium dense, brown/gray, moist, Homogeneous, HCl reaction not tested, mixed soil colors. Length Recovered 1.0 ft, Length Retained 1.0 ft		
5				1 3 9 10 (12)		D-3		Sandy SILT with gravel, trace organics, medium dense, gray, moist, Homogeneous, HCl reaction not tested. Length Recovered 1.8 ft, Length Retained 1.8 ft		
	2			3 5 6 8 (11)		D-4		Sandy SILT with gravel, trace organics, medium dense, gray, wet, Homogeneous, HCl reaction not tested. Length Recovered 1.6 ft, Length Retained 1.6 ft		
10	3			3 5 4 6 (9)		D-5		Sandy SILT with gravel, trace organics, loose, gray, moist, Homogeneous, HCl reaction not tested. Length Recovered 1.6 ft, Length Retained 1.6 ft		
	4									
15				15 15 18 25 (33)		D-6		Silty SAND with gravel, dense, gray, wet, Homogeneous, HCl reaction not tested, with large gravel as indicated by drilling. Length Recovered 1.5 ft, Length Retained 1.5 ft	05/02/2006 05/02/2006	
	5									
20	6									

Washington State
Department of Transportation

LOG OF TEST BORING

Start Card SE01354

Job No. XL-2827 SR 5 Elevation 320.0 ft (97.5 m)

HOLE No. NW1-9-06

Sheet 2 of 2

Project I-5 5th Ave NE to NE 92nd St. - Noise Wall

Driller Jody Dickson Lic# 2637

Depth (ft)	Meters (m)	Profile	Standard Penetration Blows/ft (10 20 30 40)	SPT Blows/6" (N)	Sample Type	Sample No. (Tube No.)	Lab Tests	Description of Material	Groundwater	Instrument
				11 12 14 17 (26)		D-7		Silty SAND with gravel, dense, gray, wet, Stratified, HCl reaction not tested, with large gravel as indicated by drilling, sandy silt with gravel layers. Length Recovered 2.0 ft, Length Retained 2.0 ft		
								End of test hole boring at 22 ft below ground elevation. This is a summary Log of Test Boring. Soil/Rock descriptions are derived from visual field identifications and laboratory test data.		

Depth (ft): 25, 30, 35, 40, 45

Meters (m): 7, 8, 9, 10, 11, 12, 13

Washington State Department of Transportation

LOG OF TEST BORING

Start Card SE01354

HOLE No. NW1-10-06

Sheet 1 of 2

Job No. XL-2827 SR 5 Elevation 323.9 ft (98.7 m)

Project I-5 5th Ave NE to NE 92nd St. - Noise Wall

Driller Jody Dickson Lic# 2637

Site Address Vic. of I-5 and 5th Ave NE to NE 92nd St

Inspector Donny Henderson

Start May 2, 2006 Completion May 2, 2006 Well ID# Equipment CME 850 w/ autohammer

Station Offset Casing HQ 3.5 Method Wet Rotary

Northing 257208 Easting 1272213 Latitude Longitude

County King Subsection SW 1/4 of the SW 1/4 Section 32 Range 4E Township 26

Depth (ft)	Meters (m)	Profile	Standard Penetration Blows/ft (10 20 30 40)	SPT Blows/6" (N)	Sample Type	Sample No. (Tube No.)	Lab Tests	Description of Material	Groundwater	Instrument
				3 4 6 8 (10)		D-1		Sandy SILT with gravel, loose, gray, moist, Homogeneous, HCl reaction not tested, from 0.0' to 1.0' trace organics. Length Recovered 1.3 ft, Length Retained 1.3 ft		
	1			7 7 6 6 (13)		D-2		Sandy SILT with gravel, trace organics, medium dense, gray, moist, Homogeneous, HCl reaction not tested, mixed soil colors. Length Recovered 2.0 ft, Length Retained 2.0 ft		
5				1 3 4 3 (7)		D-3		Sandy SILT with gravel, trace organics, loose, brown/gray, wet, Stratified, HCl reaction not tested, mixed soil colors, organic soil layers. Length Recovered 1.8 ft, Length Retained 1.8 ft		
	2			1 3 4 4 (7)		D-4		Sandy SILT with gravel, trace organics, loose, gray, wet, Laminated,Fissured, HCl reaction not tested, poorly graded sand layers. Length Recovered 1.5 ft, Length Retained 1.5 ft		
10	3			3 6 6 8 (12)		D-5		Sandy SILT with gravel, trace organics, medium dense, gray, moist, Laminated,Fissured, HCl reaction not tested, poorly graded sand layers, mixed soil colors. Length Recovered 1.8 ft, Length Retained 1.8 ft		
	4									
15	5			8 13 25 54 (38)		D-6		Silty SAND with gravel, dense, gray/brown, moist, Stratified, HCl reaction not tested, poorly graded sand layers, sandy silt with gravel layer, with large gravel as indicated by drilling. Length Recovered 1.7 ft, Length Retained 1.7 ft		
			>>	75/2 (75)		D-7		No Recovery		
20	6							05/02/2006 05/02/2006		

SOIL XL-2827.GPJ SOIL.GDT 7/11/06 11:23:50 A7

Washington State Department of Transportation

LOG OF TEST BORING

Start Card SE01354

Job No. XL-2827 SR 5 Elevation 323.9 ft (98.7 m)

HOLE No. NW1-10-06

Sheet 2 of 2

Project I-5 5th Ave NE to NE 92nd St. - Noise Wall

Driller Jody Dickson Lic# 2637

Depth (ft)	Meters (m)	Profile	Standard Penetration Blows/ft (10 20 30 40)	SPT Blows/6" (N)	Sample Type	Sample No. (Tube No.)	Lab Tests	Description of Material	Groundwater	Instrument
				20 21 18 20 (39)		D-8		Silty SAND with gravel, dense, brown, wet, Stratified, HCl reaction not tested, from 20.5 to 22.0' poorly graded sand, slightly silty. Length Recovered 2.0 ft, Length Retained 2.0 ft		
								End of test hole boring at 22 ft below ground elevation. This is a summary Log of Test Boring. Soil/Rock descriptions are derived from visual field identifications and laboratory test data.		
25	7									
	8									
30	9									
	10									
35	11									
40	12									
	13									
45										

Washington State Department of Transportation

LOG OF TEST BORING

Start Card SE01355

HOLE No. NW2-1-06

Sheet 1 of 2

Job No. XL-2827 SR 5 Elevation 314.3 ft (95.8 m)

Project I-5 5th Ave NE to NE 92nd St. - Noise Wall

Driller Jody Dickson Lic# 2637

Site Address Vic. of I-5 and 5th Ave NE to NE 92nd St

Inspector Donny Henderson

Start May 8, 2006 Completion May 8, 2006 Well ID# Equipment CME 850 w/ autohammer

Station Offset Casing HQ 3.5 Method Wet Rotary

Northing 257307 Easting 1271872 Latitude Longitude

County King Subsection NW 1/4 of the NW 1/4 Section 32 Range 4E Township 26

Depth (ft)	Meters (m)	Profile	Standard Penetration Blows/ft (10 20 30 40)	SPT Blows/6" (N)	Sample Type	Sample No. (Tube No.)	Lab Tests	Description of Material	Groundwater	Instrument
				4 5 7 8 (12)		D-1		Sandy SILT with gravel, medium dense, gray/brown, moist, Stratified, HCl reaction not tested, mixed soil colors, trace organics 0.0' to 0.5', silty sand with gravel layers. Length Recovered 2.0 ft, Length Retained 2.0 ft		
	1			7 11 12 16 (23)		D-2		Sandy SILT with gravel, trace organics, medium dense, brown/gray, moist, Disrupted, HCl reaction not tested, mixed soil colors and types. Length Recovered 2.0 ft, Length Retained 2.0 ft		
5				6 7 7 6 (14)		D-3		Silty SAND with organics, medium dense, black, moist, Stratified, HCl reaction not tested, from 6.5' to 6.6' ash layer. Length Recovered 1.6 ft, Length Retained 1.6 ft		
	2			4 5 8 7 (13)		D-4		Silty SAND with gravel, trace organics, medium dense, brown, moist, Stratified, HCl reaction not tested, from 9.5' to 10.0' poorly graded sand, moist, gray. Length Recovered 1.1 ft, Length Retained 1.1 ft		
10	3			11 21 26 24 (47)		D-5		Silty SAND with gravel, dense, gray, moist, Homogeneous, HCl reaction not tested, with large gravel as indicated by drilling, drove on large gravel. Length Recovered 0.8 ft, Length Retained 0.8 ft 05/08/2006 05/08/2006		
	4									
15	5			4 5 6 6 (11)		D-6		Sandy Elastic SILT with gravel, stiff, gray, wet, Homogeneous, HCl reaction not tested. Length Recovered 1.5 ft, Length Retained 1.5 ft		
20	6									

SOIL XL-2827.GPJ SOIL.GDT 7/11/06 11:23:59 A7

Washington State
Department of Transportation

LOG OF TEST BORING

Start Card SE01355

HOLE No. NW2-1-06

Job No. XL-2827 SR 5 Elevation 314.3 ft (95.8 m)

Sheet 2 of 2

Project I-5 5th Ave NE to NE 92nd St. - Noise Wall

Driller Jody Dickson Lic# 2637

Depth (ft)	Meters (m)	Profile	Standard Penetration Blows/ft (10 20 30 40)	SPT Blows/6" (N)	Sample Type	Sample No. (Tube No.)	Lab Tests	Description of Material	Groundwater	Instrument
				14 11 8 10 (19)		D-7		Sandy SILT with gravel, medium dense, gray/brown, wet, Stratified, HCl reaction not tested, silty sand with gravel layers. Length Recovered 1.6 ft, Length Retained 1.6 ft		
25	7			7 13 16 22 (29)		D-8		Poorly graded SAND, slightly silty, dense, brown, wet, Homogeneous, HCl reaction not tested. Length Recovered 1.5 ft, Length Retained 1.5 ft		
	8							End of test hole boring at 27 ft below ground elevation. This is a summary Log of Test Boring. Soil/Rock descriptions are derived from visual field identifications and laboratory test data.		
30	9									
35	10									
40	11									
45	12									
	13									

Washington State Department of Transportation

LOG OF TEST BORING

Start Card SE01355

Job No. XL-2827 SR 5 Elevation 317.2 ft (96.7 m)

HOLE No. NW2-2-06

Sheet 1 of 2

Project I-5 5th Ave NE to NE 92nd St. - Noise Wall

Driller Jody Dickson Lic# 2637

Site Address Vic. of I-5 and 5th Ave NE to NE 92nd St

Inspector Donny Henderson

Start May 8, 2006 Completion May 8, 2006 Well ID# Equipment CME 850 w/ autohammer

Station Offset Casing HQ 3.5 Method Wet Rotary

Northing 256959 Easting 1271892 Latitude Longitude

County King Subsection NW 1/4 of the NW 1/4 Section 32 Range 4E Township 26

Depth (ft)	Meters (m)	Profile	Standard Penetration Blows/ft (10 20 30 40)	SPT Blows/6" (N)	Sample Type	Sample No. (Tube No.)	Lab Tests	Description of Material	Groundwater	Instrument
				2 4 5 6 (9)		D-1		Sandy SILT with gravel, trace organics, loose, gray/brown, moist, Homogeneous, HCl reaction not tested, mixed soil colors. Length Recovered 0.6 ft, Length Retained 0.6 ft		
	1			8 13 14 13 (27)		D-2		Silty SAND with gravel, trace organics, dense, brown/gray, moist, Homogeneous, HCl reaction not tested, with large gravel as indicated by drilling. Length Recovered 0.5 ft, Length Retained 0.5 ft		
5				3 9 9 10 (18)		D-3		Sandy SILT with gravel, medium dense, brown, wet, Homogeneous, HCl reaction not tested. Length Recovered 0.8 ft, Length Retained 0.8 ft		
	2			9 7 10 8 (17)		D-4		Silty SAND with gravel, medium dense, brown, wet, Stratified, HCl reaction not tested, with large gravel as indicated by drilling, sandy silt with gravel layers. Length Recovered 1.0 ft, Length Retained 1.0 ft		
10	3			7 8 8 8 (16)		D-5		Silty SAND with gravel, medium dense, brown, wet, Stratified, HCl reaction not tested, sandy silt with gravel layers. 1.5 ft, Length Retained 1.5 ft	05/08/2006 05/08/2006	
	4									
15	5			9 11 11 13 (22)		D-6		Poorly graded SAND, slightly silty, medium dense, brown, moist, Stratified, HCl reaction not tested, sandy silt layers throughout. Length Recovered 2.0 ft, Length Retained 2.0 ft		
20	6									

SOIL XL-2827.GPJ SOIL.GDT 7/11/06,11:23:59 A7

Washington State
Department of Transportation

LOG OF TEST BORING

Start Card SE01355

Job No. XL-2827 SR 5 Elevation 317.2 ft (96.7 m)

HOLE No. NW2-2-06

Sheet 2 of 2

Project I-5 5th Ave NE to NE 92nd St. - Noise Wall

Driller Jody Dickson Lic# 2637

Depth (ft)	Meters (m)	Profile	Standard Penetration Blows/ft (10 20 30 40)	SPT Blows/6" (N)	Sample Type	Sample No. (Tube No.)	Lab Tests	Description of Material	Groundwater	Instrument
				15 18 23 37 (41)		D-7		Sandy SILT, dense, brown, moist, Stratified, HCl reaction not tested, poorly graded sand layers. Length Recovered 2.0 ft, Length Retained 2.0 ft		
								End of test hole boring at 22 ft below ground elevation. This is a summary Log of Test Boring. Soil/Rock descriptions are derived from visual field identifications and laboratory test data.		
	7									
25										
	8									
	9									
30										
	10									
35										
	11									
	12									
40										
	13									
45										

Washington State
Department of Transportation

LOG OF TEST BORING

Start Card SE01355

Job No. XL-2827 SR 5 Elevation 323.2 ft (98.5 m)

HOLE No. NW2-3-06

Sheet 1 of 2

Project I-5 5th Ave NE to NE 92nd St. - Noise Wall

Driller Jody Dickson Lic# 2637

Site Address Vic. of I-5 and 5th Ave NE to NE 92nd St

Inspector Donny Henderson

Start May 9, 2006 Completion May 9, 2006 Well ID# Equipment CME 850 w/ autohammer

Station Offset Casing HQ 3.5 Method Wet Rotary

Northing 256605 Easting 1271858 Latitude Longitude

County King Subsection NW 1/4 of the NW 1/4 Section 32 Range 4E Township 26

Depth (ft)	Meters (m)	Profile	Standard Penetration Blows/ft (10 20 30 40)	SPT Blows/6" (N)	Sample Type	Sample No. (Tube No.)	Lab Tests	Description of Material	Groundwater	Instrument
				6 6 9 9 (15)		D-1		Sandy SILT with gravel, medium dense, brown, moist, Homogeneous, HCl reaction not tested, from 0.0' to 0.3' trace organics. Length Recovered 2.0 ft, Length Retained 2.0 ft		
	1			9 9 7 9 (16)		D-2		Sandy SILT with gravel, trace organics, medium dense, brown, moist, Stratified, HCl reaction not tested, silty sand with gravel layers. Length Recovered 2.0 ft, Length Retained 2.0 ft		
5				5 5 8 14 (13)		D-3		Silty SAND with gravel, medium dense, brown, moist, Stratified, HCl reaction not tested, organic soil layers, from 6.2' to 7.0' poorly graded sand, slightly silty. Length Recovered 1.6 ft, Length Retained 1.6 ft		
	2			8 9 8 7 (17)		D-4		Poorly graded SAND with gravel, slightly silty, medium dense, brown, moist, Homogeneous, HCl reaction not tested. Length Recovered 1.2 ft, Length Retained 1.2 ft		
10	3			2 3 6 9 (9)		D-5		Poorly graded SAND with gravel, slightly silty, loose, brown, moist, Homogeneous, HCl reaction not tested. Length Recovered 1.8 ft, Length Retained 1.8 ft		
	4								05/09/2006 05/09/2006	
15	5			9 10 11 16 (21)		D-6		Poorly graded SAND, medium dense, brown, moist, Laminated,Fissured, HCl reaction not tested. Length Recovered 1.8 ft, Length Retained 1.8 ft		
20	6									

SOIL XL-2827 GPJ SOIL.GDT 7/11/06 11:24:00 A7

Washington State
Department of Transportation

LOG OF TEST BORING

Start Card SE01355

Job No. XL-2827 SR 5 Elevation 323.2 ft (98.5 m)

HOLE No. NW2-3-06

Sheet 2 of 2

Project I-5 5th Ave NE to NE 92nd St. - Noise Wall

Driller Jody Dickson Lic# 2637

Depth (ft)	Meters (m)	Profile	Standard Penetration Blows/ft (10 20 30 40)	SPT Blows/6" (N)	Sample Type	Sample No. (Tube No.)	Lab Tests	Description of Material	Groundwater	Instrument
				16 27 44 25 (71)		D-7		Sandy SILT with gravel, very dense, gray/brown, moist, Stratified, HCl reaction not tested, silty sand with gravel layers, wet. Length Recovered 2.0 ft, Length Retained 2.0 ft		
								End of test hole boring at 22 ft below ground elevation. This is a summary Log of Test Boring. Soil/Rock descriptions are derived from visual field identifications and laboratory test data.		

Depth (ft): 25, 30, 35, 40, 45

Meters (m): 7, 8, 9, 10, 11, 12, 13

SOIL XL-2827.GPJ SOIL.GDT 7/11/06 11:24:00 A7

Washington State Department of Transportation

LOG OF TEST BORING

Start Card SE01355

Job No. XL-2827 SR 5 Elevation 324.9 ft (99.0 m)

HOLE No. NW2-4-06

Sheet 1 of 2

Project I-5 5th Ave NE to NE 92nd St. - Noise Wall

Driller Jody Dickson Lic# 2637

Site Address Vic. of I-5 and 5th Ave NE to NE 92nd St

Inspector Brian M Breck

Start May 9, 2006 Completion May 9, 2006 Well ID# Equipment CME 850 w/ autohammer

Station Offset Casing HQ 3.5 Method Wet Rotary

Northing 256203 Easting 1271815 Latitude Longitude

County King Subsection NW 1/4 of the NW 1/4 Section 32 Range 4E Township 26

Depth (ft)	Meters (m)	Profile	Standard Penetration Blows/ft (10 20 30 40)	SPT Blows/6" (N)	Sample Type	Sample No. (Tube No.)	Lab Tests	Description of Material	Groundwater	Instrument
				2 2 4 4		D - 1		Silty SAND with gravel ,medium dense , gray , moist , homogeneous ,HCl reaction not tested. Length Recovered 2.0 ft, Length Retained 2.0 ft		
	1			9 9 10 10		D - 2		Silty SAND with gravel ,medium dense , gray and brown , moist , Laminated ,HCl reaction not tested. Length Recovered 1.7 ft, Length Retained 1.7 ft		
5	2			4 5 8 10		D - 3		Silty SAND with gravel ,medium dense , gray and brown , moist , Laminated ,HCl reaction not tested. Length Recovered 1.0 ft, Length Retained 1.0 ft		
				3 4 8 7 (12)		D - 4		Sandy SILT, medium dense, gray and brown, moist, Laminated, HCl reaction not tested. Length Recovered 2.0 ft, Length Retained 2.0 ft		
10	3			6 12 10 20 (22)		D - 5		Sandy SILT, with some sand lenses, dense, grayish brown, moist, Laminated, HCl reaction not tested. Length Recovered 2.0 ft, Length Retained 2.0 ft		
	4							05/09/2006 05/09/2006	▼	
15	5			7 11 20 24 (31)		D - 6		SILT, dense, gray, moist, Homogeneous, HCl reaction not tested. Length Recovered 2.0 ft, Length Retained 2.0 ft		
20	6			9 12		D - 7		Sandy SILT with gravel, changing to poorly graded SAND at - 20.5'., dense, gray, moist, Homogeneous, HCl		

Washington State Department of Transportation

LOG OF TEST BORING

Start Card SE01355

Job No. XL-2827 SR 5 Elevation 324.9 ft (99.0 m)

HOLE No. NW2-4-06

Sheet 2 of 2

Project I-5 5th Ave NE to NE 92nd St. - Noise Wall

Driller Jody Dickson Lic# 2637

Depth (ft)	Meters (m)	Profile	Standard Penetration Blows/ft (10 20 30 40)	SPT Blows/6" (N)	Sample Type	Sample No. (Tube No.)	Lab Tests	Description of Material	Groundwater	Instrument
				19 28 (31)				reaction not tested. Length Recovered 2.0 ft, Length Retained 2.0 ft		
								End of test hole boring at 21 ft below ground elevation. This is a summary Log of Test Boring. Soil/Rock descriptions are derived from visual field identifications and laboratory test data.		
25	7									
30	8									
35	9									
40	10									
45	11									
	12									
	13									

Washington State Department of Transportation

LOG OF TEST BORING

Start Card SE01355

HOLE No. NW2-5-06

Sheet 1 of 2

Job No. XL-2827 SR 5 Elevation 328.2 ft (100.0 m)

Project I-5 5th Ave NE to NE 92nd St. - Noise Wall

Driller Jody Dickson Lic# 2637

Site Address Vic. of I-5 and 5th Ave NE to NE 92nd St

Inspector Donny Henderson

Start May 9, 2006 Completion May 9, 2006 Well ID# Equipment CME 850 w/ autohammer

Station Offset Casing HQ 3.5 Method Wet Rotary

Northing 255847 Easting 1271758 Latitude Longitude

County King Subsection NW 1/4 of the NW 1/4 Section 32 Range 4E Township 26

Depth (ft)	Meters (m)	Profile	Standard Penetration Blows/ft (10 20 30 40)	SPT Blows/6" (N)	Sample Type	Sample No. (Tube No.)	Lab Tests	Description of Material	Groundwater	Instrument
				4 4 6 15 (10)		D-1		Sandy SILT, trace organics, loose, brown, moist, Homogeneous, HCl reaction not tested. Length Recovered 1.5 ft, Length Retained 1.5 ft		
	1			11 9 11 9 (20)		D-2		Sandy SILT with gravel, trace organics, medium dense, brown, moist, Homogeneous, HCl reaction not tested. Length Recovered 1.0 ft, Length Retained 1.0 ft		
5				4 6 7 13 (13)		D-3		Sandy SILT with gravel, medium dense, brown, wet, Stratified, HCl reaction not tested, sandy silt layers, organic soil with sand layers. Length Recovered 0.8 ft, Length Retained 0.8 ft		
10	3			2 3 4 7 (7)		D-5		Sandy SILT, loose, brown, moist, Stratified, HCl reaction not tested, silty sand layers. Length Recovered 2.0 ft, Length Retained 2.0 ft	05/09/2006 05/09/2006	
15	5			5 8 10 13 (18)		D-6		Sandy SILT, medium dense, brown, moist, Laminated,Fissured, HCl reaction not tested, silty sand layers. Length Recovered 2.0 ft, Length Retained 2.0 ft		
20	6									

SOIL XL-2827.GPJ SOIL.GDT 7/11/06,11:24:02 A7

Washington State Department of Transportation

LOG OF TEST BORING

Start Card SE01355

Job No. XL-2827 SR 5 Elevation 328.2 ft (100.0 m) HOLE No. NW2-5-06

Sheet 2 of 2

Project I-5 5th Ave NE to NE 92nd St. - Noise Wall Driller Jody Dickson Lic# 2637

Depth (ft)	Meters (m)	Profile	Standard Penetration Blows/ft (10 20 30 40)	SPT Blows/6" (N)	Sample Type	Sample No. (Tube No.)	Lab Tests	Description of Material	Groundwater	Instrument
				6 7 14 21 (21)		D-7		Silty SAND, medium dense, brown, moist, Laminated,Fissured, HCl reaction not tested, sandy silt layers. Length Recovered 2.0 ft, Length Retained 2.0 ft		
								End of test hole boring at 22 ft below ground elevation. This is a summary Log of Test Boring. Soil/Rock descriptions are derived from visual field identifications and laboratory test data.		

Depth (ft): 25, 30, 35, 40, 45

Meters (m): 7, 8, 9, 10, 11, 12, 13

Washington State Department of Transportation

LOG OF TEST BORING

Start Card SE01355

HOLE No. NW2-6-06

Sheet 1 of 2

Job No. XL-2827 SR 5 Elevation 310.6 ft (94.7 m)

Project I-5 5th Ave NE to NE 92nd St. - Noise Wall

Driller Jody Dickson Lic# 2637

Site Address Vic. of I-5 and 5th Ave NE to NE 92nd St

Inspector Donny Henderson

Start May 8, 2006 Completion May 8, 2006 Well ID# Equipment CME 850 w/ autohammer

Station Offset Casing HQ 3.5 Method Wet Rotary

Northing 255601 Easting 1271717 Latitude Longitude

County King Subsection NW 1/4 of the NW 1/4 Section 32 Range 4E Township 26

Depth (ft)	Meters (m)	Profile	Standard Penetration Blows/ft (10 20 30 40)	SPT Blows/6" (N)	Sample Type	Sample No. (Tube No.)	Lab Tests	Description of Material	Groundwater	Instrument
				11 8 15 12 (23)		D-1		Silty SAND with gravel, medium dense, gray, moist, Homogeneous, HCl reaction not tested, with large gravel as indicated by drilling process. Length Recovered 1.8 ft, Length Retained 1.8 ft		
	1			12 10 14 13 (24)		D-2		Silty SAND with gravel, dense, gray, moist, Homogeneous, HCl reaction not tested, with large gravel as indicated by drilling process. Length Recovered 2.0 ft, Length Retained 2.0 ft		
5				14 16 17 14 (33)		D-3		Silty SAND with gravel, dense, gray, moist, Homogeneous, HCl reaction not tested, with large gravel as indicated by drilling process. Length Recovered 2.0 ft, Length Retained 2.0 ft		
	2			15 14 16 21 (30)		D-4		Silty SAND with gravel, dense, gray, moist, Homogeneous, HCl reaction not tested, with large gravel as indicated by drilling process. Length Recovered 2.0 ft, Length Retained 2.0 ft		
10	3			16 11 14 14 (25)		D-5		Silty SAND with gravel, dense, gray, moist, Homogeneous, HCl reaction not tested, with large gravel as indicated by drilling process. Length Recovered 2.0 ft, Length Retained 2.0 ft		
	4			15 18 23 50 (41)		D-6		Silty SAND with gravel, dense, gray, wet, Homogeneous, HCl reaction not tested, with large gravel as indicated by drilling process. Length Recovered 2.0 ft, Length Retained 2.0 ft		
15			>>	38 60/5 (60)		D-7		Silty SAND with gravel, very dense, gray, wet, Homogeneous, HCl reaction not tested, with large gravel as indicated by drilling process. Length Recovered 1.0 ft, Length Retained 1.0 ft 05/08/2006 05/08/2006	▼	
	5		>>	41 65/5 (65)		D-8		Silty SAND with gravel, very dense, gray, wet, Homogeneous, HCl reaction not tested, with large gravel as indicated by drilling process. Length Recovered 1.0 ft, Length Retained 1.0 ft		
20	6		>>							

Washington State Department of Transportation

LOG OF TEST BORING

Start Card SE01355

Job No. XL-2827 SR 5 Elevation 310.6 ft (94.7 m)

HOLE No. NW2-6-06

Sheet 2 of 2

Project I-5 5th Ave NE to NE 92nd St. - Noise Wall

Driller Jody Dickson Lic# 2637

Depth (ft)	Meters (m)	Profile	Standard Penetration Blows/ft (10 20 30 40)	SPT Blows/6" (N)	Sample Type	Sample No. (Tube No.)	Lab Tests	Description of Material	Groundwater	Instrument
				49 69/5 (69)		D-9		Silty SAND with gravel, very dense, gray, wet, Homogeneous, HCl reaction not tested, with large gravel as indicated by drilling process. Length Recovered 1.0 ft, Length Retained 1.0 ft		
								End of test hole boring at 21 ft below ground elevation. This is a summary Log of Test Boring. Soil/Rock descriptions are derived from visual field identifications and laboratory test data.		
25	7									
30	8									
35	9									
40	10									
	11									
	12									
	13									
45										

Washington State Department of Transportation

LOG OF TEST BORING

Start Card SE01356

HOLE No. NW3-1-06

Sheet 1 of 2

Job No. XL-2827 SR 5 Elevation 303.7 ft (92.6 m)

Project I-5 5th Ave NE to NE 92nd St. - Noise Wall

Driller Sean Verlo Lic# 2615

Site Address Vic. of I-5 5th Ave NE to NE 92nd St

Inspector Dan Reed

Start May 1, 2006 Completion May 1, 2006 Well ID# Equipment CME 45 w/ autohammer

Station Offset Casing HQ 3.5 Method Wet Rotary

Northing 255414 Easting 1271673 Latitude Longitude

County King Subsection NW 1/4 of the NW 1/4 Section 5 Range 4E Township 26

Depth (ft)	Meters (m)	Profile	Standard Penetration Blows/ft (10 20 30 40)	SPT Blows/6" (N)	Sample Type	Sample No. (Tube No.)	Lab Tests	Description of Material	Groundwater	Instrument
				12 13 15 13 (28)		D-1		Silty SAND with gravel, medium dense, gray, moist, Homogeneous, HCl reaction not tested. Length Recovered 1.3 ft, Length Retained 1.3 ft		
	1			16 15 15 13 (30)		D-2		Silty SAND, medium dense, gray, moist, Stratified, HCl reaction not tested, mixed soil colors, trace of organics. Length Recovered 2.0 ft, Length Retained 2.0 ft		
5				7 5 3 3 (8)		D-3		Silty SAND with gravel, loose, gray, moist, Disrupted, HCl reaction not tested, trace of organics, mixed soil colors and types. Length Recovered 2.0 ft, Length Retained 2.0 ft		
	2			3 2 1 1 (3)		D-4		Silty SAND with gravel, loose, gray, moist, Disrupted, HCl reaction not tested, mixed soil colors. Length Recovered 0.4 ft, Length Retained 0.4 ft		
10	3			9 11 10 8 (21)		D-5		Silty SAND with gravel, medium dense, light brown, moist, Disrupted, HCl reaction not tested, mixed soil colors. Length Recovered 2.0 ft, Length Retained 2.0 ft		
	4			8 8 25 24 (33)		D-6		Silty SAND with gravel, dense, light brown, wet, Homogeneous, HCl reaction not tested, with large gravel as indicated by drilling process. Length Recovered 1.0 ft, Length Retained 1.0 ft		
15			>>	51/5 (51)		D-7		Silty SAND with gravel, very dense, light brown, wet, Homogeneous, HCl reaction not tested, with large gravel as indicated by drilling process Length Recovered 0.5 ft, Length Retained 0.5 ft	05/01/2006	
	5		>>	39 55/5 (55)		D-8		Silty SAND with gravel, very dense, light brown, wet, Homogeneous, HCl reaction not reported, with large gravel as indicated by drilling process. Length Recovered 1.0 ft, Length Retained 1.0 ft	05/01/2006	
	6									
20			>>							

Washington State
Department of Transportation

LOG OF TEST BORING

Start Card SE01356

Job No. XL-2827 SR 5 Elevation 303.7 ft (92.6 m) HOLE No. NW3-1-06

Sheet 2 of 2

Project I-5 5th Ave NE to NE 92nd St. - Noise Wall Driller Sean Verlo Lic# 2615

Depth (ft)	Meters (m)	Profile	Standard Penetration Blows/ft (10 20 30 40)	SPT Blows/6" (N)	Sample Type	Sample No. (Tube No.)	Lab Tests	Description of Material	Groundwater	Instrument
				69/5 (69)		D-9		Silty SAND with gravel, very dense, light brown, wet, Homogeneous, HCl reaction not tested, with large gravel as indicated by drilling process. Length Recovered 0.5 ft, Length Retained 0.5 ft		
								End of test hole boring at 20.5 ft below ground elevation. This is a summary Log of Test Boring. Soil/Rock descriptions are derived from visual field identifications and laboratory test data.		
	7									
25										
	8									
	9									
30										
	10									
35										
	11									
	12									
40										
	13									
45										

Washington State Department of Transportation

LOG OF TEST BORING

Start Card SE01356

HOLE No. NW3-2-06

Sheet 1 of 2

Job No. XL-2827 SR 5 Elevation 292.0 ft (89.0 m)

Project I-5 5th Ave NE to NE 92nd St. - Noise Wall

Driller Sean Verlo Lic# 2615

Site Address Vic. of I-5 and 5th Ave NE and NE 92nd St.

Inspector Dan Reed

Start May 1, 2006 Completion May 1, 2006 Well ID# Equipment CME 45 w/ autohammer

Station Offset Casing HQ 3.5 Method Wet Rotary

Northing 255148 Easting 1271867 Latitude Longitude

County King Subsection NW 1/4 of the NW 1/4 Section 5 Range 4E Township 26

Depth (ft)	Meters (m)	Profile	Standard Penetration Blows/ft (10 20 30 40)	SPT Blows/6" (N)	Sample Type	Sample No. (Tube No.)	Lab Tests	Description of Material	Groundwater	Instrument
				15 10 14 8 (24)		D-1		Silty SAND with gravel, medium dense, gray, moist, Homogeneous, HCl reaction not tested. Length Recovered 2.0 ft, Length Retained 2.0 ft		
	1			22 18 17 20 (35)		D-2		Silty SAND with gravel, dense, gray, moist, Homogeneous, HCl reaction not tested, with large gravel as indicated by drilling process. Length Recovered 0.7 ft, Length Retained 0.7 ft		
5				13 16 14 12 (30)		D-3		Silty SAND with gravel, dense, gray, moist, Homogeneous, HCl reaction not tested, with large gravel as indicated by drilling process, silt lenses. Length Recovered 2.0 ft, Length Retained 2.0 ft		
	2									
				12 10 14 16 (24)		D-4		Sandy SILT with gravel, medium dense, gray, moist, Stratified, HCl reaction not tested, mixed soil colors. Length Recovered 2.0 ft, Length Retained 2.0 ft		
10	3			11 15 16 18 (31)		D-5		Sandy SILT with gravel, dense, gray, moist, Disrupted, HCl reaction not tested, mixed soil colors and types. Length Recovered 2.0 ft, Length Retained 2.0 ft		
	4			22 12 12 10 (24)		D-6		Sandy SILT with gravel, medium dense, gray, moist, Disrupted, HCl reaction not tested, mixed soil colors and types Length Recovered 2.0 ft, Length Retained 2.0 ft		
15	5			14 12 17 18 (29)		D-7		Sandy SILT with gravel, dense, gray, moist, Stratified, HCl reaction not tested, mixed soil colors. Length Recovered 2.0 ft, Length Retained 2.0 ft		
				30 18 25 20 (43)		D-8		Sandy SILT with gravel, dense, gray, moist, Homogeneous, HCl reaction not tested. Length Recovered 2.0 ft, Length Retained 2.0 ft		
20	6									

Washington State
Department of Transportation

LOG OF TEST BORING

Start Card SE01356

Job No. XL-2827 SR 5 Elevation 292.0 ft (89.0 m)

HOLE No. NW3-2-06

Sheet 2 of 2

Project I-5 5th Ave NE to NE 92nd St. - Noise Wall

Driller Sean Verlo Lic# 2615

Depth (ft)	Meters (m)	Profile	Standard Penetration Blows/ft (10 20 30 40)	SPT Blows/6" (N)	Sample Type	Sample No. (Tube No.)	Lab Tests	Description of Material	Groundwater	Instrument
				29 25 18 21 (43)		D-9		Sandy SILT with gravel, dense, gray, moist, Homogeneous, HCl reaction not tested, with large gravel as indicated by drilling process. Length Recovered 2.0 ft, Length Retained 2.0 ft		
25	7							End of test hole boring at 22 ft below ground elevation. This is a summary Log of Test Boring. Soil/Rock descriptions are derived from visual field identifications and laboratory test data. No Free Water.		
	8									
30	9									
	10									
35	11									
40	12									
	13									
45										

Washington State Department of Transportation

LOG OF TEST BORING

Start Card SE01356

HOLE No. NW3-3-06

Sheet 1 of 2

Job No. XL-2827 SR 5 Elevation 289.7 ft (88.3 m)

Project I-5 5th Ave NE to NE 92nd St. - Noise Wall

Driller Sean Verio Lic# 2615

Site Address Vic. of I-5 and 5th Ave NE to NE 92nd St

Inspector Dan Reed

Start May 2, 2006 Completion May 2, 2006 Well ID# Equipment CME 45 w/ autohammer

Station Offset Casing HQ 3.5 Method Wet Rotary

Northing 254818 Easting 1272019 Latitude Longitude

County King Subsection NW 1/4 of the NW 1/4 Section 5 Range 4E Township 26

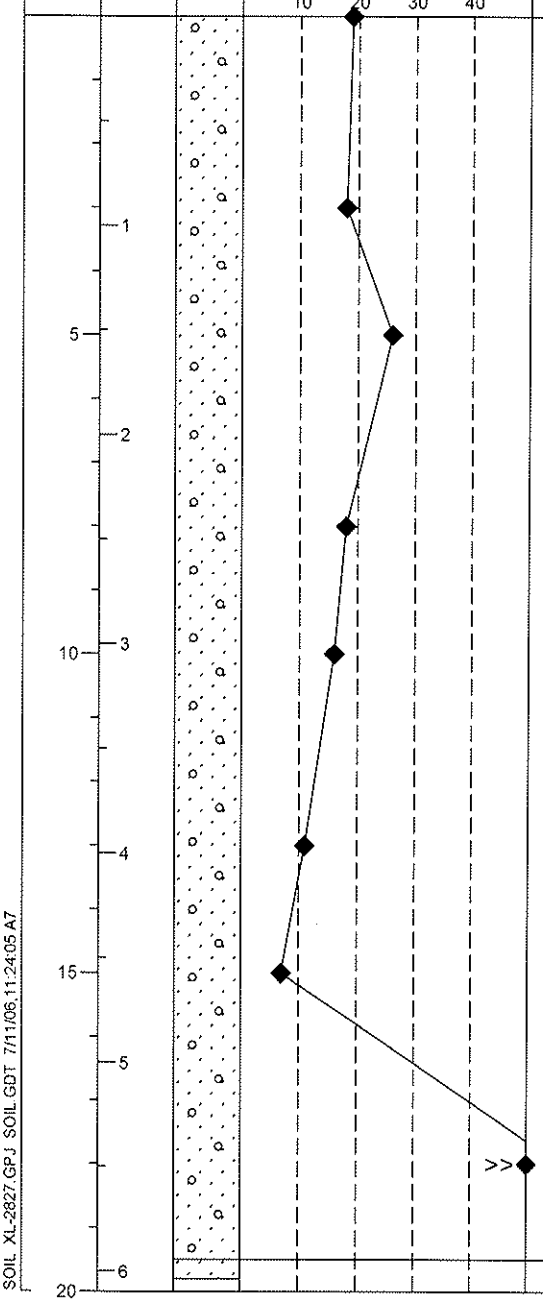

Depth (ft)	Meters (m)	SPT Blows/6" (N)	Sample Type	Sample No. (Tube No.)	Lab Tests	Description of Material	Groundwater	Instrument
		5 12 7 10 (19)		D-1		Silty SAND with gravel, medium dense, gray, moist, Stratified, HCl reaction not tested, mixed soil colors and types. Length Recovered 2.0 ft, Length Retained 2.0 ft		
	1	14 10 8 9 (18)		D-2		Silty SAND with gravel, medium dense, light brown, moist, Stratified, HCl reaction not tested, mixed soil colors and types, trace of organics. Length Recovered 2.0 ft, Length Retained 2.0 ft		
5		18 17 9 16 (26)		D-3		Silty SAND with gravel, dense, light brown, moist, Stratified, HCl reaction not tested, mixed soil colors and types, trace of organics. Length Recovered 1.3 ft, Length Retained 1.3 ft		
	2	6 7 11 12 (18)		D-4		Silty SAND with gravel, medium dense, light brown, moist, Stratified, HCl reaction not tested, mixed soil colors and types, trace of organics. Length Recovered 1.5 ft, Length Retained 1.5 ft		
10	3	7 8 8 7 (16)		D-5		Silty SAND with gravel, medium dense, gray, moist, Disrupted, HCl reaction not tested, mixed soil colors and types. Length Recovered 0.8 ft, Length Retained 0.8 ft		
	4	5 5 6 5 (11)		D-6		Silty SAND with gravel, medium dense, light brown, moist, Disrupted, HCl reaction not tested, mixed soil colors and types. Length Recovered 0.7 ft, Length Retained 0.7 ft		
15	5	3 4 3 4 (7)		D-7		Silty SAND, loose, light brown, moist, Homogeneous, HCl reaction not tested, mixed soil colors and types Length Recovered 0.5 ft, Length Retained 0.5 ft		
		>> 6 6 50/5 (56)		D-8		Silty SAND with gravel, very dense, gray, moist, Homogeneous, HCl reaction not tested, drove sampler on large cobble or bolder. Length Recovered 0.4 ft, Length Retained 0.4 ft		
20	6					End of test hole boring at 19.5 ft below ground elevation.		

SOIL XL-2827.GPJ SOIL.GDT 7/11/06 11:24:05 A7

Washington State
Department of Transportation

LOG OF TEST BORING

Start Card SE01356

Job No. XL-2827 SR 5 Elevation 289.7 ft (88.3 m)

HOLE No. NW3-3-06

Sheet 2 of 2

Project I-5 5th Ave NE to NE 92nd St. - Noise Wall

Driller Sean Verlo Lic# 2615

Depth (ft)	Meters (m)	Profile	Standard Penetration Blows/ft (10 20 30 40)	SPT Blows/6" (N)	Sample Type	Sample No. (Tube No.)	Lab Tests	Description of Material	Groundwater	Instrument
								This is a summary Log of Test Boring. Soil/Rock descriptions are derived from visual field identifications and laboratory test data. 05/02/2006 05/02/2006		
	7									
25										
	8									
	9									
30										
	10									
35										
	11									
	12									
40										
	13									
45										

Washington State
Department of Transportation

LOG OF TEST BORING

Start Card SE01356

HOLE No. NW3-4-06

Sheet 1 of 2

Job No. XL-2827 SR 5 Elevation 285.6 ft (87.0 m)

Project I-5 5th Ave NE to NE 92nd St. - Noise Wall

Driller Sean Verlo Lic# 2615

Site Address Vic. of I-5 and 5th Ave NE to NE 92nd St

Inspector Dan Reed

Start May 2, 2006 Completion May 2, 2006 Well ID# Equipment CME 45 w/ autohammer

Station Offset Casing HQ 3.5 Method Wet Rotary

Northing 254534 Easting 1272168 Latitude Longitude

County King Subsection NW 1/4 of the NW 1/4 Section 5 Range 4E Township 26

Depth (ft)	Meters (m)	Profile	Standard Penetration Blows/ft (10 20 30 40)	SPT Blows/6" (N)	Sample Type	Sample No. (Tube No.)	Lab Tests	Description of Material	Groundwater	Instrument
				7 9 9 8 (18)		D-1		Silty SAND with gravel, medium dense, gray, moist, Homogeneous, HCl reaction not tested, trace of organics. Length Recovered 1.4 ft, Length Retained 1.4 ft		
	1			6 7 8 8 (15)		D-2		Silty SAND with gravel, medium dense, light brown, moist, Homogeneous, HCl reaction not tested. Length Recovered 1.3 ft, Length Retained 1.3 ft		
5				6 6 9 9 (15)		D-3		Silty SAND with gravel, medium dense, light brown, moist, Disrupted, HCl reaction not tested, mixed soil colors and types. Length Recovered 1.8 ft, Length Retained 1.8 ft		
	2									
				9 10 13 17 (23)		D-4		Sandy SILT with gravel, medium dense, light brown, moist, Disrupted,Homogeneous, HCl reaction not tested, mixed soil colors and types. Length Recovered 2.0 ft, Length Retained 2.0 ft		
10	3			8 12 17 17 (29)		D-5		Sandy SILT with gravel, dense, light brown, moist, Homogeneous, HCl reaction not tested. Length Recovered 1.0 ft, Length Retained 1.0 ft		
	4									
15	5			20 17 18 17 (35)		D-6		Sandy SILT with gravel, dense, light brown, moist, Disrupted, HCl reaction not tested, mixed soil colors and types. Length Recovered 1.8 ft, Length Retained 1.8 ft		
20	6									

SOIL XL-2827 GPJ SOIL.GDT 7/11/06,11:24:06 A7

Washington State
Department of Transportation

LOG OF TEST BORING

Start Card SE01356

Job No. XL-2827 SR 5 Elevation 285.6 ft (87.0 m)

HOLE No. NW3-4-06

Sheet 2 of 2

Project I-5 5th Ave NE to NE 92nd St. - Noise Wall

Driller Sean Verlo Lic# 2615

Depth (ft)	Meters (m)	Profile	Standard Penetration Blows/ft (10 20 30 40)	SPT Blows/6" (N)	Sample Type	Sample No. (Tube No.)	Lab Tests	Description of Material	Groundwater	Instrument
				17 19 18 20 (37)		D-7		Sandy SILT with gravel, dense, light brown, moist, Homogeneous, HCl reaction not tested. Length Recovered 1.4 ft, Length Retained 1.4 ft		
								05/02/2006 05/02/2006		
	7							End of test hole boring at 22 ft below ground elevation. This is a summary Log of Test Boring. Soil/Rock descriptions are derived from visual field identifications and laboratory test data.		
25										
	8									
	9									
30										
	10									
35										
	11									
	12									
40										
	13									
45										

Washington State Department of Transportation

LOG OF TEST BORING

Start Card SE01356

HOLE No. NW3-5-06

Sheet 1 of 2

Job No. XL-2827 SR 5 Elevation 277.6 ft (84.6 m)

Project I-5 5th Ave NE to NE 92nd St. - Noise Wall

Driller Sean Verlo Lic# 2615

Site Address Vic. of I-5 and 5th Ave NE to NE 92nd St

Inspector Dan Reed

Start May 2, 2006 Completion May 2, 2006 Well ID# Equipment CME 45 w/ autohammer

Station Offset Casing HQ 3.5 Method Wet Rotary

Northing 254223 Easting 1272376 Latitude Longitude

County King Subsection NW 1/4 of the NW 1/4 Section 5 Range 4E Township 26

Depth (ft)	Meters (m)	SPT Blows/6" (N)	Sample Type	Sample No. (Tube No.)	Lab Tests	Description of Material	Groundwater	Instrument
		4 4 5 4 (9)		D-1		Silty SAND with gravel, loose, gray, moist, Homogeneous, HCl reaction not tested, trace of organics. Length Recovered 1.6 ft, Length Retained 1.6 ft		
	1	3 5 10 18 (15)		D-2		Silty SAND with gravel, medium dense, gray, moist, Stratified, HCl reaction not tested, mixed soil colors and types. Length Recovered 1.3 ft, Length Retained 1.3 ft		
5	2	15 11 10 9 (21)		D-3		Sandy SILT with gravel, medium dense, gray, moist, Disrupted, HCl reaction not tested, mixed soil colors and types. Length Recovered 1.1 ft, Length Retained 1.1 ft		
		10 12 20 16 (32)		D-4		Sandy SILT with gravel, dense, gray, moist, Homogeneous, HCl reaction not tested, mixed soil colors and types, trace of organics. Length Recovered 2.0 ft, Length Retained 2.0 ft		
10	3	13 11 10 8 (21)		D-5		Sandy SILT with gravel, medium dense, gray, moist, Homogeneous, HCl reaction not tested, mixed soil colors and types, trace of organics. Length Recovered 2.0 ft, Length Retained 2.0 ft		
	4	10 6 4 5 (10)		D-6		Sandy SILT with gravel, loose, black, moist, Homogeneous, HCl reaction not tested, trace of organic soil 14.0' to 15.0', mixed soil colors and types. Length Recovered 2.0 ft, Length Retained 2.0 ft		
15	5	6 9 9 10 (18)		D-7		Sandy SILT with gravel, medium dense, gray, moist, Disrupted, HCl reaction not tested, trace of organics, mixed soil colors and types. Length Recovered 1.3 ft, Length Retained 1.3 ft		
	6	10 12 12 10 (24)		D-8		Sandy SILT with gravel, medium dense, gray, moist, Disrupted, HCl reaction not tested, mixed soil colors and types. Length Recovered 1.0 ft, Length Retained 1.0 ft		
20								

Standard Penetration Blows/ft: 10 20 30 40

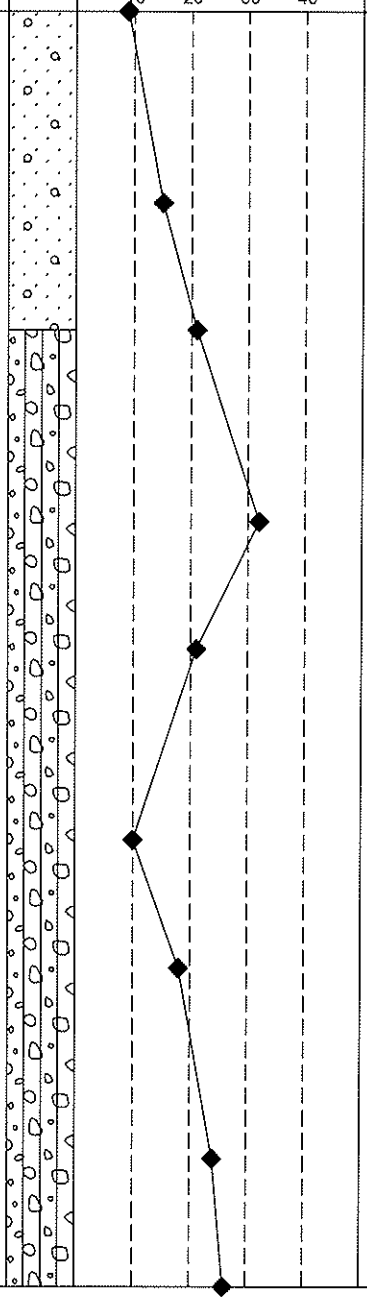

Washington State Department of Transportation

LOG OF TEST BORING

Start Card SE01356

Job No. XL-2827 SR 5 Elevation 277.6 ft (84.6 m) HOLE No. NW3-5-06

Sheet 2 of 2

Project I-5 5th Ave NE to NE 92nd St. - Noise Wall Driller Sean Verlo Lic# 2615

Depth (ft)	Meters (m)	Profile	Standard Penetration Blows/ft (10 20 30 40)	SPT Blows/6" (N)	Sample Type	Sample No. (Tube No.)	Lab Tests	Description of Material	Groundwater	Instrument
				10 11 15 17 (26)		D-9		Sandy SILT with gravel, medium dense, gray, wet, Disrupted, HCl reaction not tested, mixed soil colors and types, trace of organic soil. Length Recovered 1.4 ft, Length Retained 1.4 ft	05/02/2006	
				9 11 11 12 (22)		D-10		Sandy SILT with gravel, medium dense, gray, wet, Disrupted, HCl reaction not tested, with large gravel as indicated by drilling process, mixed soil colors and types, trace of organics. Length Recovered 1.5 ft, Length Retained 1.5 ft	05/02/2006	
25	7							End of test hole boring at 24 ft below ground elevation. This is a summary Log of Test Boring. Soil/Rock descriptions are derived from visual field identifications and laboratory test data.		
30	8									
35	9									
40	10									
	11									
	12									
45	13									

Washington State Department of Transportation

LOG OF TEST BORING

Start Card SE01357

HOLE No. NW4-1-06

Sheet 1 of 2

Job No. XL-2827 SR 5 Elevation 284.1 ft (86.6 m)

Project I-5 5th Ave NE to NE 92nd St. - Noise Wall

Driller Jody Dickson Lic# 2637

Site Address Vic. of I-5 and 5th Ave NE to NE 92nd St

Inspector Donny Henderson

Start May 15, 2006 Completion May 15, 2006 Well ID# Equipment CME 850 w/ autohammer

Station Offset Casing HQ 3.5 Method Wet Rotary

Northing 253997 Easting 1272596 Latitude Longitude

County King Subsection SW 1/4 of the SW 1/4 Section 5 Range 4E Township 26

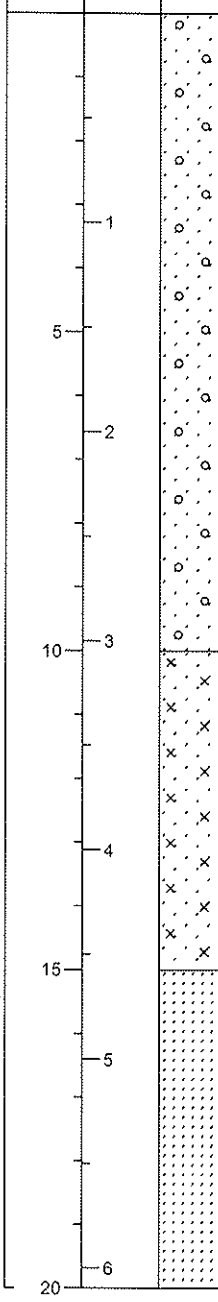

Depth (ft)	Meters (m)	SPT Blows/6" (N)	Sample Type	Sample No. (Tube No.)	Lab Tests	Description of Material	Groundwater	Instrument
		4 6 13 11 (19)		D-1		Silty SAND with gravel, medium dense, brown, moist, Homogeneous, HCl reaction not tested, trace organics 0.0' to 0.3' Length Recovered 2.0 ft, Length Retained 2.0 ft		
	1	6 5 4 5 (9)		D-2		Silty SAND with gravel, loose, brown, moist, Homogeneous, HCl reaction not tested Length Recovered 2.0 ft, Length Retained 2.0 ft		
5		3 4 5 8 (9)		D-3		Silty SAND with gravel, loose, brown, moist, Stratified, HCl reaction not tested, from 5.6' to 5.8' organic soil with sand, from 5.8' to 7.0' poorly graded sand, slightly silty Length Recovered 1.7 ft, Length Retained 1.7 ft		
	2	5 10 13 13 (23)		D-4		Silty SAND with gravel, medium dense, brown, moist, Homogeneous, HCl reaction not tested Length Recovered 2.0 ft, Length Retained 2.0 ft		
10	3	13 16 24 28 (40)		D-5		Silty SAND, dense, brown, moist, Homogeneous, HCl reaction not tested Length Recovered 2.0 ft, Length Retained 2.0 ft		
15	4	13 15 25 33 (40)		D-6		Poorly graded SAND, slightly silty, dense, brown, moist, Homogeneous, HCl reaction not tested Length Recovered 2.0 ft, Length Retained 2.0 ft		
20	5 6							

SOIL XL-2827.GPJ SOIL.GDT 7/11/06,11:24:08 A7

Washington State
Department of Transportation

LOG OF TEST BORING

Start Card SE01357

Job No. XL-2827 SR 5 Elevation 284.1 ft (86.6 m)

HOLE No. NW4-1-06

Sheet 2 of 2

Project I-5 5th Ave NE to NE 92nd St. - Noise Wall

Driller Jody Dickson Lic# 2637

Depth (ft)	Meters (m)	Profile	Standard Penetration Blows/ft (10 20 30 40)	SPT Blows/6" (N)	Sample Type	Sample No. (Tube No.)	Lab Tests	Description of Material	Groundwater	Instrument
				19 30 33 50 (63)		D-7		Poorly graded SAND with gravel, slightly silty, very dense, brown, moist, Homogeneous, HCl reaction not tested Length Recovered 2.0 ft, Length Retained 2.0 ft		
								End of test hole boring at 22 ft below ground elevation. This is a summary Log of Test Boring. Soil/Rock descriptions are derived from visual field identifications and laboratory test data.		
25	7									
30	8									
35	9									
40	10									
45	11									
	12									
	13									

Washington State Department of Transportation

LOG OF TEST BORING

Start Card SE01357

HOLE No. NW4-2-06

Sheet 1 of 1

Job No. XL-2827 SR 5 Elevation 288.1 ft (87.8 m)

Project I-5 5th Ave NE to NE 92nd St. - Noise Wall

Driller Jody Dickson Lic# 2637

Site Address Vic. of I-5 and 5th Ave NE to NE 92nd St

Inspector Donny Henderson

Start May 15, 2006 Completion May 15, 2006 Well ID# Equipment CME 850 w/ autohammer

Station Offset Casing HQ 3.5 Method Wet Rotary

Northing 253691 Easting 1272820 Latitude Longitude

County King Subsection SW 1/4 of the SW 1/4 Section 5 Range 4E Township 26

Depth (ft)	Meters (m)	Profile	Standard Penetration Blows/ft (10 20 30 40)	SPT Blows/6" (N)	Sample Type	Sample No. (Tube No.)	Lab Tests	Description of Material	Groundwater	Instrument
				5 13 20 26 (33)		D-1		Silty SAND with gravel, dense, brown, dry, Stratified, HCl reaction not tested, trace organics 0.0' to 0.3', pieces of brick. Length Recovered 1.1 ft, Length Retained 1.1 ft		
	1			19 19 18 23 (37)		D-2		Silty SAND with gravel, dense, brown, dry, Homogeneous, HCl reaction not tested. Length Recovered 2.0 ft, Length Retained 2.0 ft		
5				11 18 21 19 (39)		D-3		Silty SAND with gravel, dense, brown, moist, Homogeneous, HCl reaction not tested, with large gravel as indicated by drilling. Length Recovered 2.0 ft, Length Retained 2.0 ft		
	2									
				17 16 17 21 (33)		D-4		Silty SAND with gravel, dense, brown, moist, Stratified, HCl reaction not tested, well graded sand with gravel layers, with large gravel as indicated by drilling. Length Recovered 2.0 ft, Length Retained 2.0 ft.		
10	3			12 14 16 18 (30)		D-5		Silty SAND with gravel, dense, brown, moist, Homogeneous, HCl reaction not tested, with large gravel as indicated by drilling. Length Recovered 1.3 ft, Length Retained 1.3 ft		
	4									
15				11 19 22 47 (41)		D-6		Silty SAND with gravel, dense, brown, moist, Homogeneous, HCl reaction not tested, with large gravel as indicated by drilling. Length Recovered 1.6 ft, Length Retained 1.6 ft		
	5									
								End of test hole boring at 17 ft below ground elevation. This is a summary Log of Test Boring. Soil/Rock descriptions are derived from visual field identifications and laboratory test data.		
20	6									

Washington State
Department of Transportation

LOG OF TEST BORING

Start Card SE01357

Job No. XL-2827 SR 5 Elevation 274.5 ft (83.7 m)

HOLE No. NW4-3-06

Sheet 1 of 2

Project I-5 5th Ave NE to NE 92nd St. - Noise Wall

Driller Sean Verlo Lic# 2615

Site Address Vic. of I-5 and 5th Ave NE to NE 92nd St

Inspector Dan Reed

Start May 3, 2006 Completion May 3, 2006 Well ID# Equipment CME 850 w/ autohammer

Station Offset Casing HQ 3.5 Method Wet Rotary

Northing 253447 Easting 1273054 Latitude Longitude

County King Subsection SW 1/4 of the SW 1/4 Section 5 Range 4E Township 26

Depth (ft)	Meters (m)	Profile	Standard Penetration Blows/ft (10 20 30 40)	SPT Blows/6" (N)	Sample Type	Sample No. (Tube No.)	Lab Tests	Description of Material	Groundwater	Instrument
				3 3 5 6 (8)		D-1		Well graded SAND, loose, gray, moist, Homogeneous, HCl reaction not tested, trace of organics. Length Recovered 1.7 ft, Length Retained 1.7 ft		
	1			8 10 11 12 (21)		D-2		Well graded SAND with gravel, medium dense, gray, moist, Homogeneous, HCl reaction not tested. Length Recovered 2.0 ft, Length Retained 2.0 ft		
5				11 13 15 17 (28)		D-3		Well graded SAND, dense, gray, moist, Homogeneous, HCl reaction not tested, slightly silty. Length Recovered 2.0 ft, Length Retained 2.0 ft		
	2			11 12 14 17 (26)		D-4		Well graded SAND, dense, gray, moist, Homogeneous, HCl reaction not tested. Length Recovered 2.0 ft, Length Retained 2.0 ft		
10	3			18 17 16 16 (33)		D-5		Well graded SAND, dense, gray, moist, Homogeneous, HCl reaction not tested. Length Recovered 2.0 ft, Length Retained 2.0 ft		
	4									
15	5			16 15 17 17 (32)		D-6		Well graded SAND, dense, gray, moist, Homogeneous, HCl reaction not tested, slightly silty. Length Recovered 2.0 ft, Length Retained 2.0 ft		
20	6									

Washington State
Department of Transportation

LOG OF TEST BORING

Start Card SE01357

Job No. XL-2827 SR 5 Elevation 274.5 ft (83.7 m)

HOLE No. NW4-3-06

Sheet 2 of 2

Project I-5 5th Ave NE to NE 92nd St. - Noise Wall

Driller Sean Verlo Lic# 2615

Depth (ft)	Meters (m)	Profile	Standard Penetration Blows/ft (10 20 30 40)	SPT Blows/6" (N)	Sample Type	Sample No. (Tube No.)	Lab Tests	Description of Material	Groundwater	Instrument
				17 18 20 21 (38)		D-7		Well graded SAND, dense, gray, moist, Homogeneous, HCl reaction not tested, slightly silty. Length Recovered 2.0 ft, Length Retained 2.0 ft		
25	7 8									
30	9 10							End of test hole boring at 27 ft below ground elevation. This is a summary Log of Test Boring. Soil/Rock descriptions are derived from visual field identifications and laboratory test data. No Free Water.		
35	11									
40	12 13									
45										

Washington State Department of Transportation

LOG OF TEST BORING

Start Card SE01357

Job No. XL-2827 SR 5 Elevation 278.3 ft (84.8 m)

HOLE No. NW4-4-06

Sheet 1 of 2

Project I-5 5th Ave NE to NE 92nd St. - Noise Wall

Driller Sean Verlo Lic# 2615

Site Address Vic. of I-5 and 5th Ave NE to NE 92nd St

Inspector Dan Reed

Start May 3, 2006 Completion May 3, 2006 Well ID# Equipment CME 850 w/ autohammer

Station Offset Casing HQ 3.5 Method Wet Rotary

Northing 253168 Easting 1273232 Latitude Longitude

County King Subsection SW 1/4 of the SW 1/4 Section 5 Range 4E Township 26

Depth (ft)	Meters (m)	Profile	Standard Penetration Blows/ft (10 20 30 40)	SPT Blows/6" (N)	Sample Type	Sample No. (Tube No.)	Lab Tests	Description of Material	Groundwater	Instrument
				4 5 5 4 (10)		D-1		Well graded SAND, loose, gray, moist, Homogeneous, HCl reaction not tested, slightly silty. Length Recovered 1.7 ft, Length Retained 1.7 ft		
	1			3 5 8 9 (13)		D-2		Well graded SAND, medium dense, gray, moist, Homogeneous, HCl reaction not tested, slightly silty. Length Recovered 2.0 ft, Length Retained 2.0 ft		
5				10 9 13 16 (22)		D-3		Well graded SAND, medium dense, gray, moist, Homogeneous, HCl reaction not tested, slightly silty. Length Recovered 2.0 ft, Length Retained 2.0 ft		
	2		>>	21 27 25 24 (52)		D-4		Well graded SAND, very dense, gray, moist, Homogeneous, HCl reaction not tested, slightly silty. Length Recovered 2.0 ft, Length Retained 2.0 ft		
10	3		>>	20 30 35 38 (65)		D-5		Well graded SAND, very dense, gray, moist, Homogeneous, HCl reaction not tested, slightly silty. Length Recovered 2.0 ft, Length Retained 2.0 ft		
	4									
15	5		>>	26 28 32 38 (60)		D-6		Well graded SAND, very dense, gray, moist, Homogeneous, HCl reaction not tested, slightly silty. Length Recovered 2.0 ft, Length Retained 2.0 ft		
20	6		>>							

SOIL XL-2827.GPJ SOIL.GDT 7/11/06,11:24:10 A7

Washington State Department of Transportation

LOG OF TEST BORING

Start Card SE01357

Job No. XL-2827 SR 5 Elevation 278.3 ft (84.8 m) HOLE No. NW4-4-06

Sheet 2 of 2

Project I-5 5th Ave NE to NE 92nd St. - Noise Wall Driller Sean Verlo Lic# 2615

Depth (ft)	Meters (m)	Profile	Standard Penetration Blows/ft (10 20 30 40)	SPT Blows/6" (N)	Sample Type	Sample No. (Tube No.)	Lab Tests	Description of Material	Groundwater	Instrument
				23 37 30 33 (67)		D-7		Well graded SAND, very dense, gray, moist, Homogeneous, HCl reaction not tested, slightly silty. Length Recovered 2.0 ft, Length Retained 2.0 ft		
								End of test hole boring at 22 ft below ground elevation. This is a summary Log of Test Boring. Soil/Rock descriptions are derived from visual field identifications and laboratory test data. No Free Water.		

Depth (ft): 25, 30, 35, 40, 45

Meters (m): 7, 8, 9, 10, 11, 12, 13

SOIL XL-2827.GPJ SOIL.GDT 7/11/06,11:24:10 A7