SEE TYPE 332 CABINET DETAIL
(CONTROL DGN)

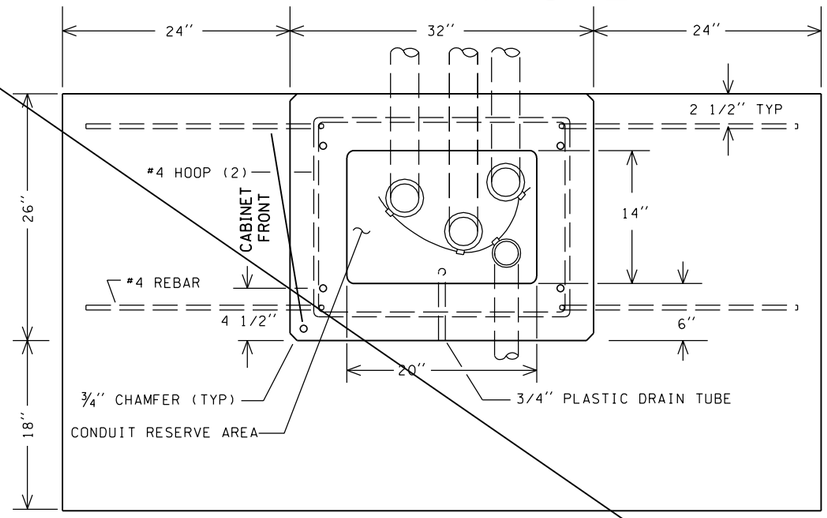

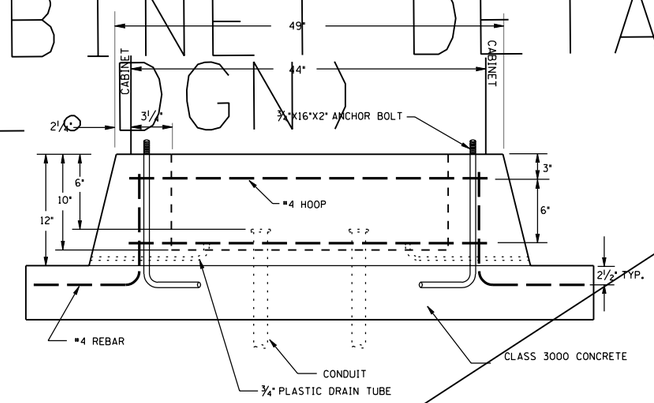

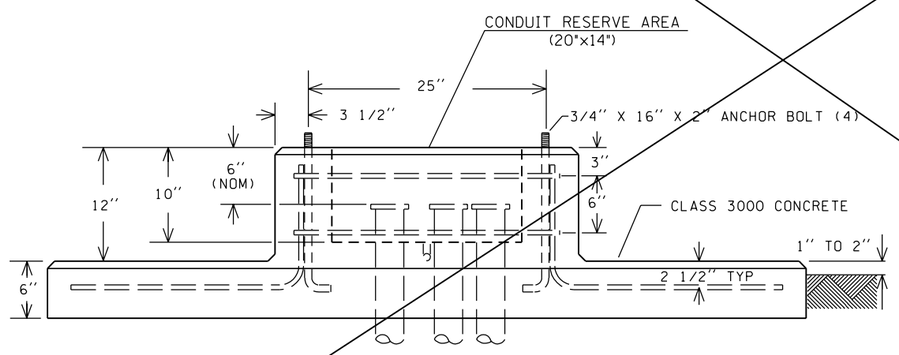

TYPE 170 CONTROLLER CABINET
FOUNDATION DETAIL

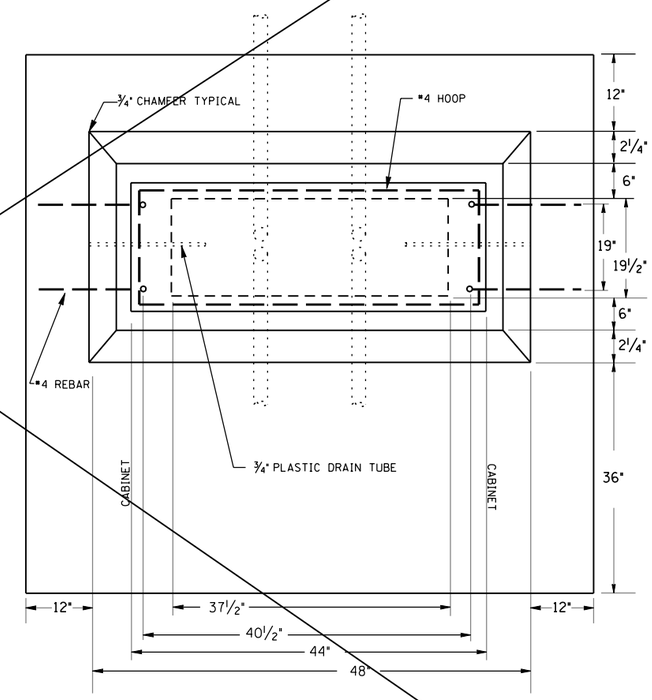

NEMA CONTROLLER CABINET
FOUNDATION DETAIL

					REGION NO.	STATE	FED.AID PROJ.NO.
					10	WASH	
DESIGNED BY					JOB NUMBER		
ENTERED BY							
CHECKED BY							
PROJ. ENGR.							
REGIONAL ADM.	2-1-99		FIX TEXT STYLE	JH	CONTRACT NO.		
	DATE	DATE	REVISION	BY			

ENVIRONMENTAL AND ENGINEERING SERVICE CENTER

Washington State Department of Transportation

ENGLISH

CABINET FOUNDATION DETAILS

8.10E

SHEET OF SHEETS