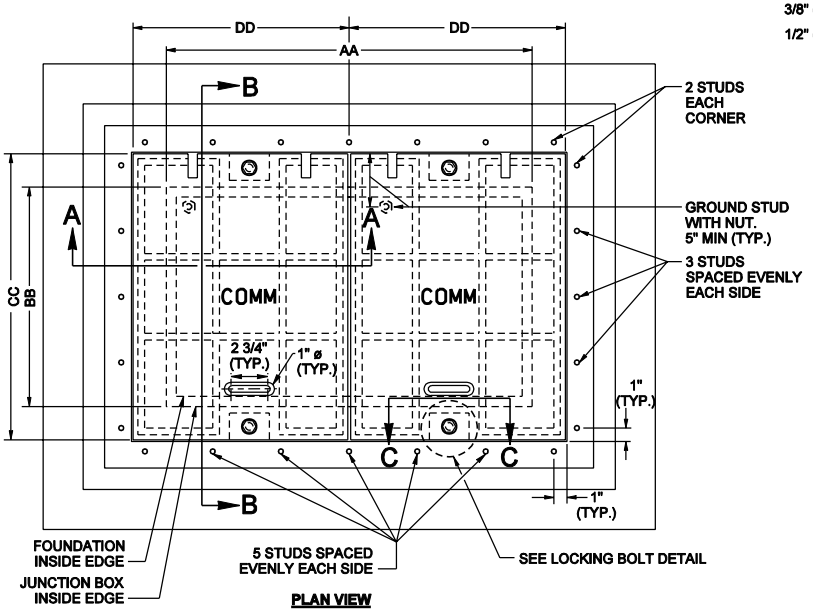

PLAN VIEW

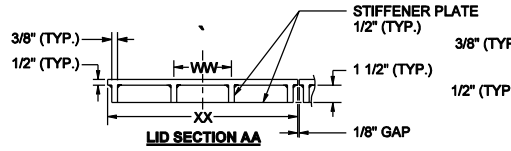

LID SECTION AA

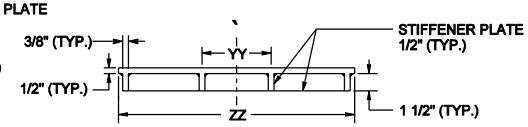

LID SECTION BB

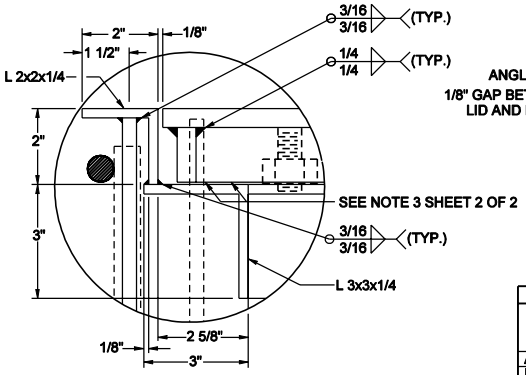

DETAIL A

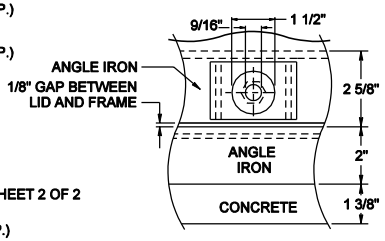

LOCKING BOLT DETAIL

JUNCTION BOX DIMENSION TABLE				
MARK	ITEM	BOX TYPE		
		4	5	6
AA	J. BOX INSIDE LENGTH	19"	28"	36"
BB	J. BOX INSIDE WIDTH	14"	17"	24"
CC	LID LENGTH (EACH SIDE)	19"	22"	29"
DD	LID WIDTH (EACH SIDE)	11 15/16"	16 7/16"	20 7/16"
WW	STIFFENER SPACING	4"	5 1/2"	6 3/4"
XX	STIFFENER LENGTH	11 15/16"	16 7/16"	20 7/16"
YY	STIFFENER SPACING	6"	7"	9 1/2"
ZZ	STIFFENER LENGTH	19"	22"	29"
CAPACITY - CONDUIT DIAMETER		6"	12"	24"

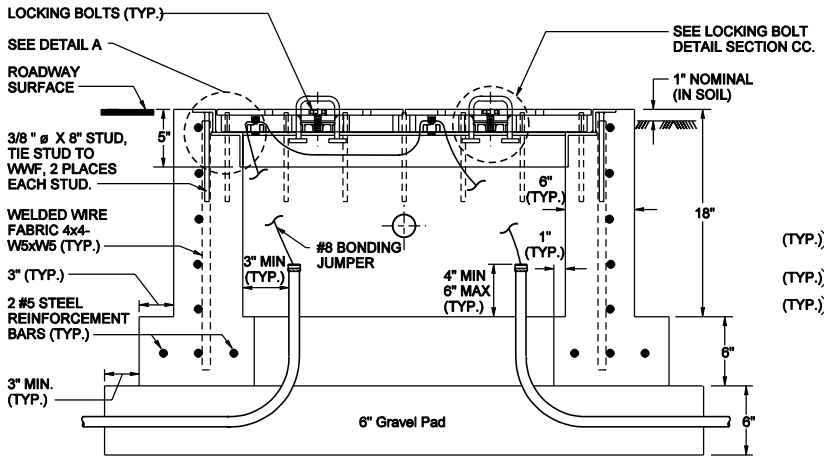

ELEVATION VIEW

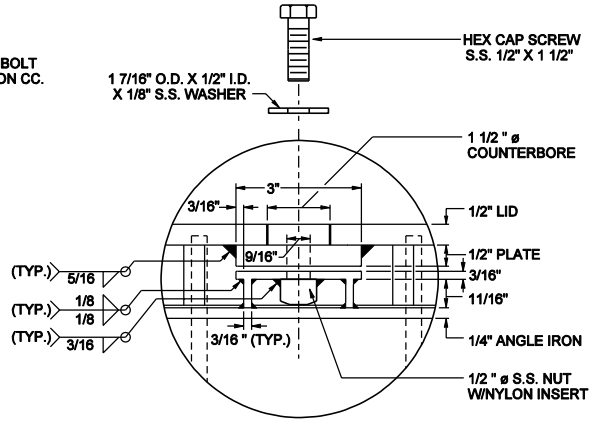

LOCKING BOLT DETAIL SECTION CC

TRAFFIC BEARING TYPE 4, 5 AND 6 JUNCTION BOX (DUAL LID)
NOT TO SCALE

					REGION NO.	STATE	FED.AID PROJ.NO.
DESIGNED BY					10	WASH	
ENTERED BY					JOB NUMBER		
CHECKED BY							
PROJ. ENGR.		9-20-2001	REVISIONS TO MEET LOAD	JH			
REGIONAL ADM.			REQUIREMENTS		CONTRACT NO.		
	DATE	DATE	REVISION	BY			

Washington State Department of Transportation

TRAFFIC BEARING JUNCTION BOX

ENGLISH

6.40E

SHEET 1 OF 2 SHEETS

s:\414126\Electrical\HomePage\trafjb.e.dgn PLOT1 09/25/2001 04:01:58 PM HarveyJ