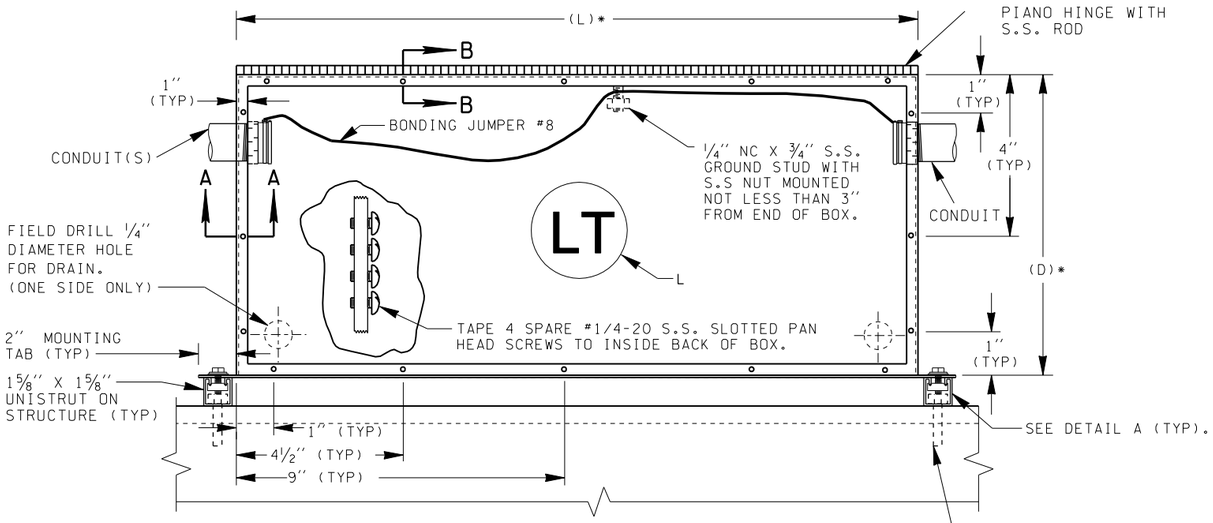

PLAN VIEW

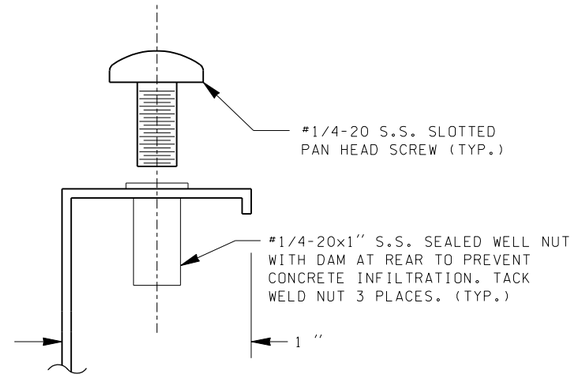

SECTION A-A

LEGEND DETAIL
MARK L

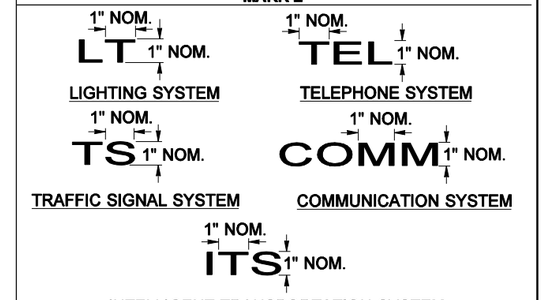

Form letters with 1/8" weld bead.

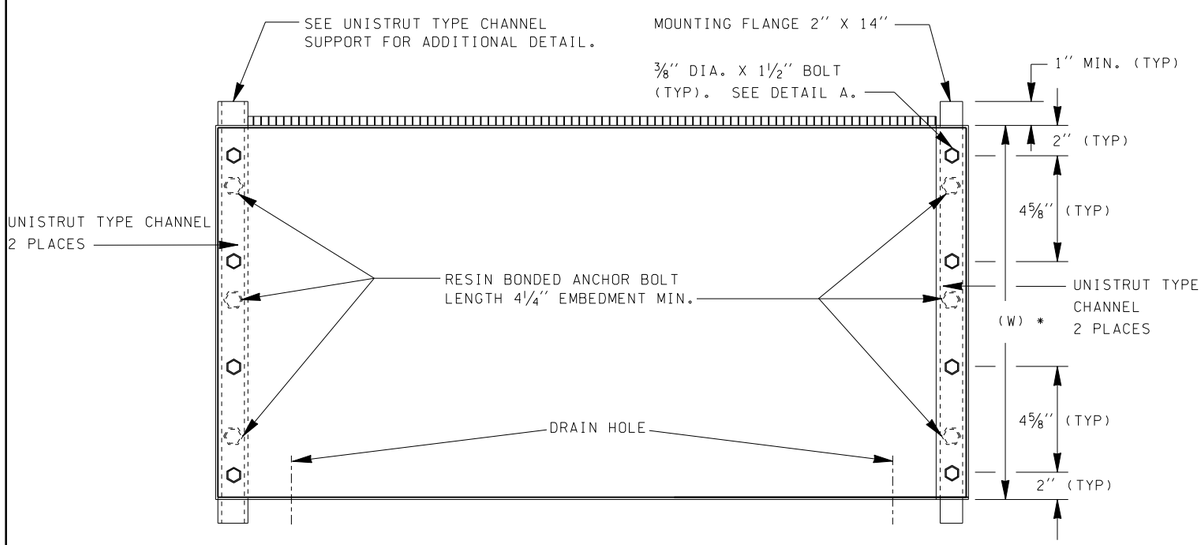

PROFILE VIEW

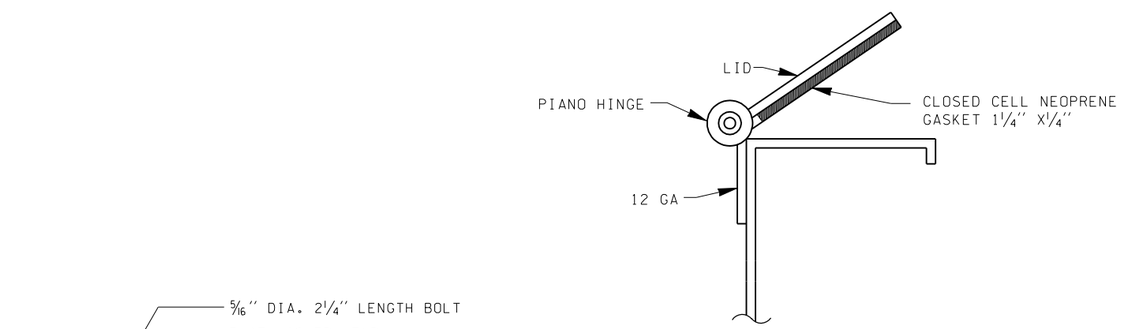

SECTION B-B

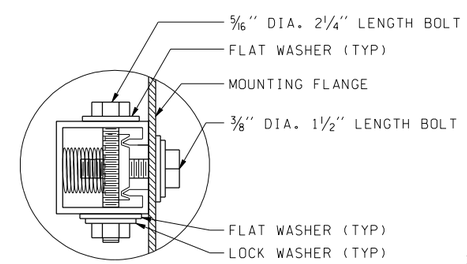

DETAIL A

NEMA 4X SURFACE MOUNT JUNCTION BOX

TYPE 304 STAINLESS STEEL, WELDED SEAM CONSTRUCTION
#12 GA BACKBOX W / #4 FINISH
#12 GA COVER W / #4 FINISH
#12 GA MOUNTING TABS
NOT TO SCALE

GENERAL NOTES

1. DRILLING THROUGH REINFORCING STEEL IS NOT ALLOWED. IF STEEL IS HIT WHILE DRILLING, THE LOCATION SHALL BE MOVED AND THE ABANDONED HOLE FILLED WITH GROUT CONFORMING TO SECTION 6-02.3(20). THERE SHALL BE A MINIMUM 3" EDGE DISTANCE TO THE CENTERLINE OF ANCHOR HOLES IN CONCRETE. MOUNT THE UNISTRUT USING AN APPROVED RESIN BONDED ANCHOR SYSTEM, INSTALLED PER MANUFACTURER'S RECOMMENDATION IN DRY CONDITIONS. RESIN BONDED ANCHORS SHALL BE STAINLESS STEEL AND SHALL BE A MINIMUM OF 1/2" DIA. (EXPANSION ANCHORS ARE NOT ALLOWED.)

2. JUNCTION BOX LABELING SHOWN FOR STRUCTURES ONLY. LABEL ALL OTHER JUNCTION BOXES PER STANDARD PLAN J-11a AND SPECIAL PROVISIONS.

* SEE CONTRAC PLANS FOR JUNCTION BOX SIZE.

FILE NAME	S:\414126\Electrical\MASTER_FILES\DETAILS Homepage\NEMA SURFACE MOUNT.dgn						
TIME	02:49:36 PM			REGION NO. 10	STATE WASH	FED.AID PROJ.NO.	
DATE	04/07/2005			JOB NUMBER			
PLOTTED BY	trinhha						
DESIGNED BY							
ENTERED BY							
CHECKED BY				CONTRACT NO.		LOCATION NO.	
PROJ. ENGR.		NEW DETAIL 6.23	3-21-05	JH			
REGIONAL ADM.		REVISION	DATE	BY			

P.E. STAMP BOX DATE

P.E. STAMP BOX DATE

Washington State Department of Transportation

NEMA 4X SURFACE MOUNT JUNCTION BOX

PLOT1

6.23

SHEET OF SHEETS