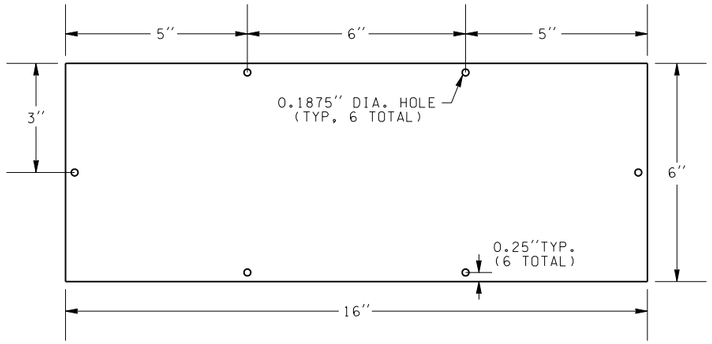

TEMPORARY ACCESS COVER
12 GUAGE STEEL

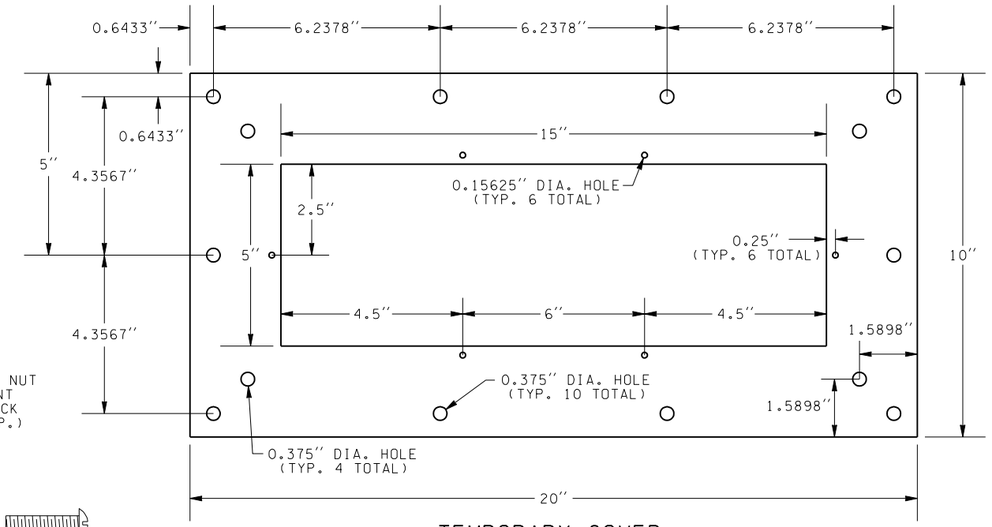

TEMPORARY COVER
12 GUAGE STEEL

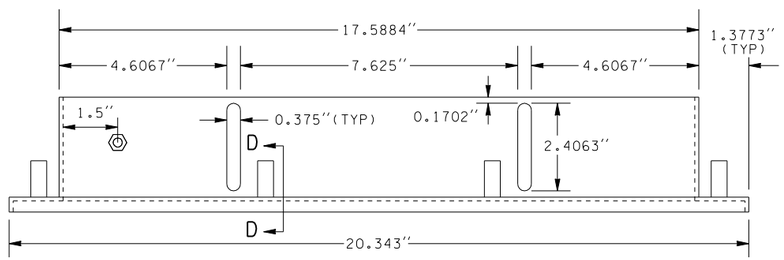

ADJUSTABLE FACE
PLAN VIEW

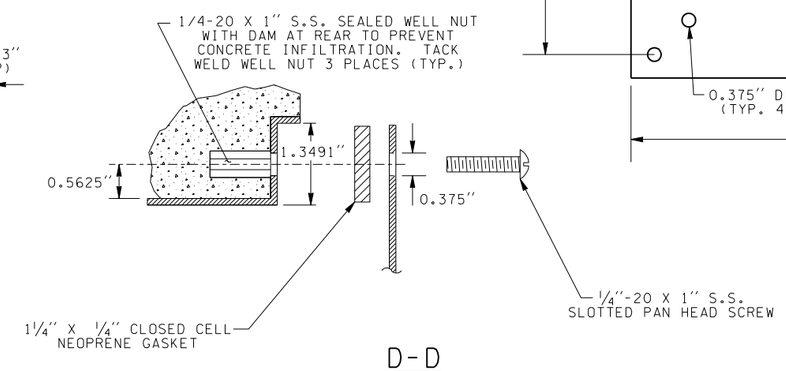

D-D

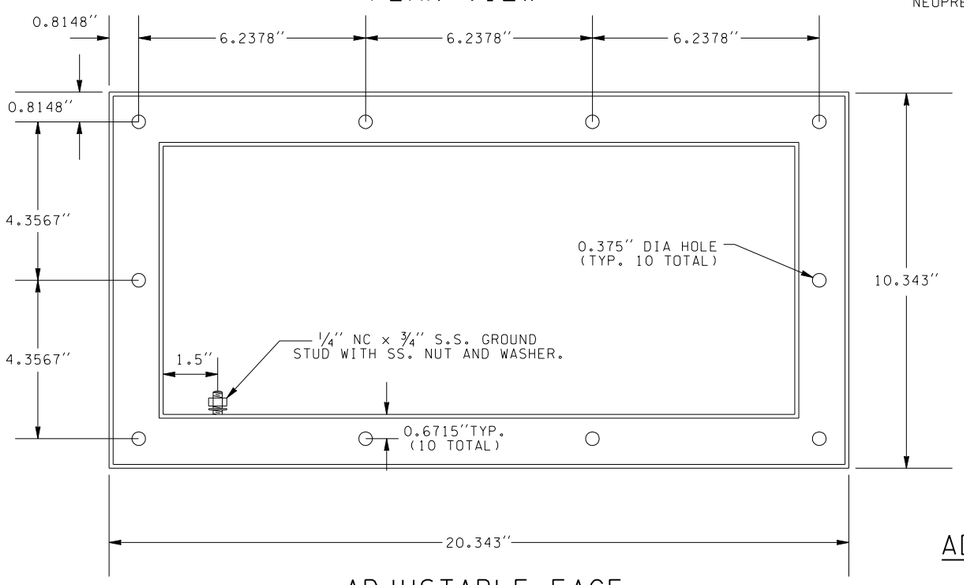

ADJUSTABLE FACE
PROFILE VIEW

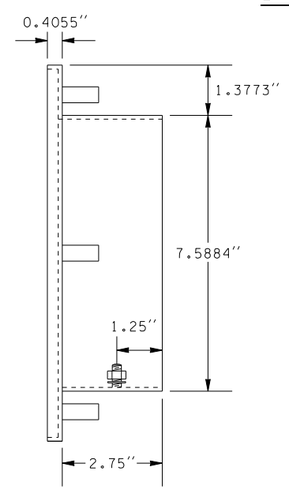

ADJUSTABLE FACE
SIDE VIEW

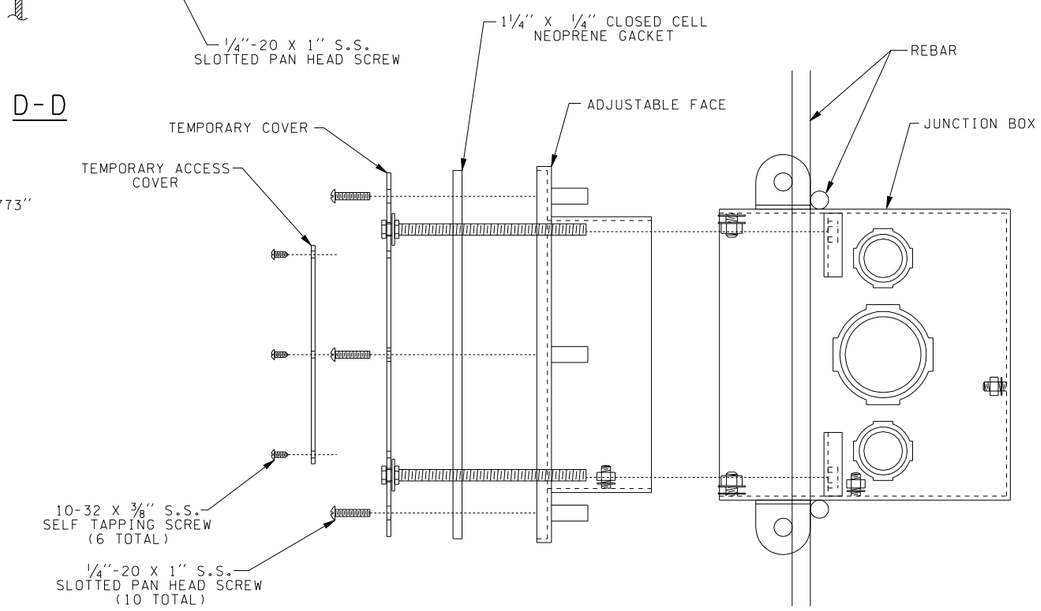

NEMA 3R ADJUSTABLE FLUSH MOUNT JUNCTION BOX

TYPE 304 STAINLESS STEEL, WELDED SEAM CONSTRUCTION
14 GUAGE BOX WITH #2B FINISH
12 GUAGE ADJUSTMENT FACE
12 GUAGE ADJUSTMENT TABS
12 GUAGE MOUNTING TABS

FILE NAME	S:\414126\Electrical\MASTER_FILES\DETAILS Homepage\adjflsjb.dgn						PLOT2
TIME	01:23:32 PM			REGION NO. 10	STATE WASH	FED.AID PROJ.NO.	
DATE	08/18/2005						
PLOTTED BY	trinhha			JOB NUMBER			
DESIGNED BY							SHEET
ENTERED BY							OF
CHECKED BY				CONTRACT NO.		LOCATION NO.	
PROJ. ENGR.							
REGIONAL ADM.		REVISION	DATE	BY			SHEETS

P.E. STAMP BOX DATE

P.E. STAMP BOX DATE

Washington State
Department of Transportation

NEMA 3R ADJUSTABLE JUNCTION BOX