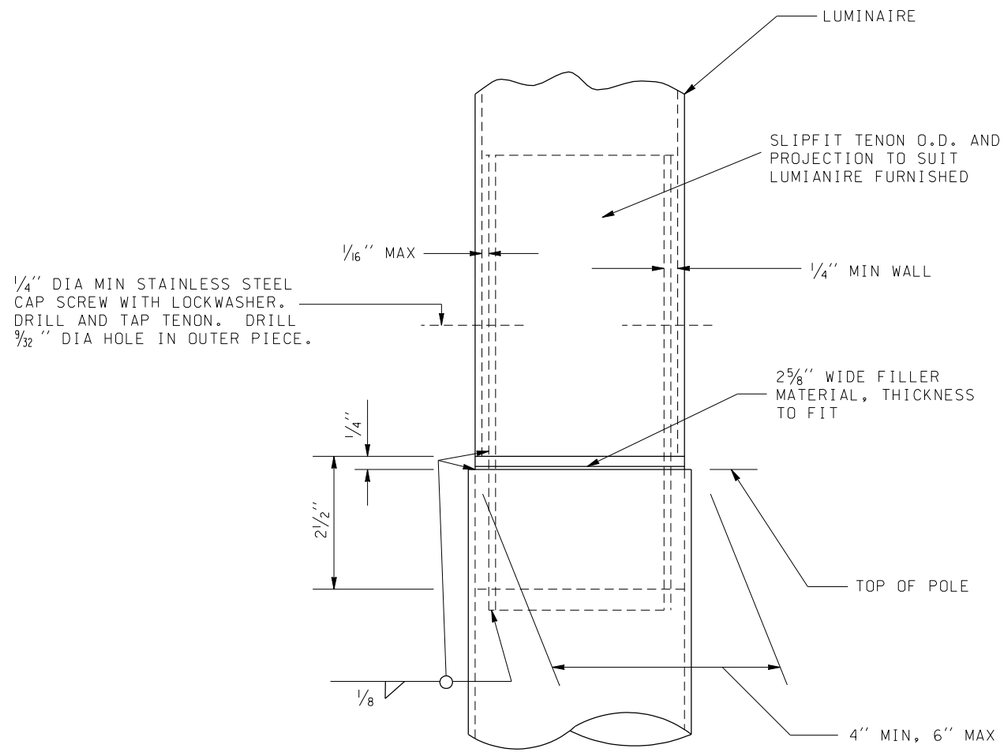

LIGHT STANDARD DETAIL-NO MAST ARM

FILE NAME	S:\414126\Electrical\MASTER_FILES\DETAILS Homepage\Ltstandard_e.dgn									PLOT1
TIME	02:48:29 PM				REGION NO.	STATE	FED.AID PROJ.NO.		Washington State Department of Transportation	ENGLISH	5.30E
DATE	04/07/2005				10	WASH					
DESIGNED BY	**WSDOT**				JOB NUMBER						SHEET
ENTERED BY											OF
CHECKED BY					CONTRACT NO.		LOCATION NO.				SHEETS
PROJ. ENGR.											
REGIONAL ADM.		REVISION	DATE	BY				P.E. STAMP BOX DATE	P.E. STAMP BOX DATE	LIGHT STANDARD DETAIL	