PLOT16 06/18/2008:\414126\Electrical\Web\dgn\illum_e.DGN MbuthN

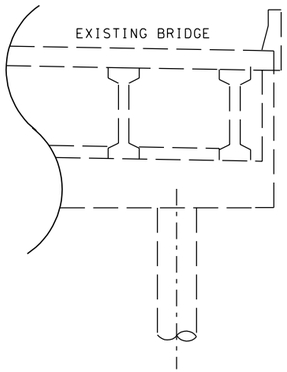

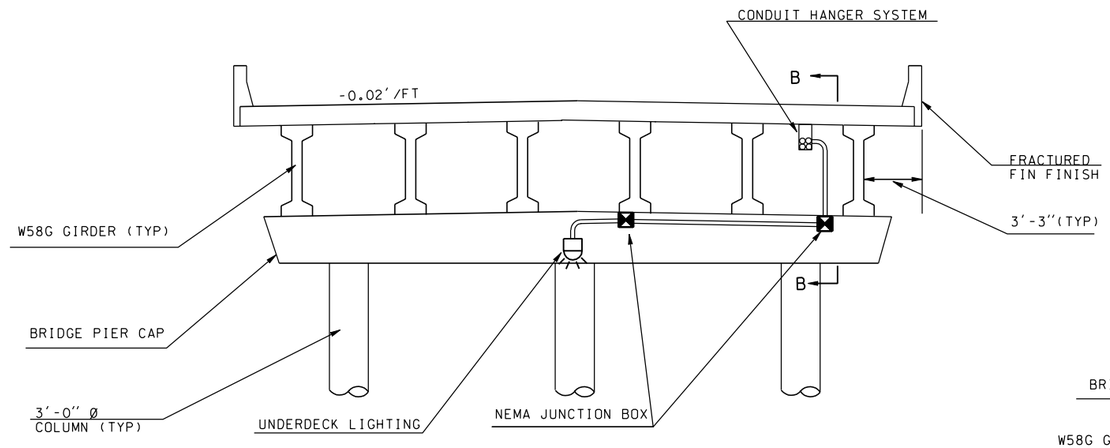

SECTION A-A

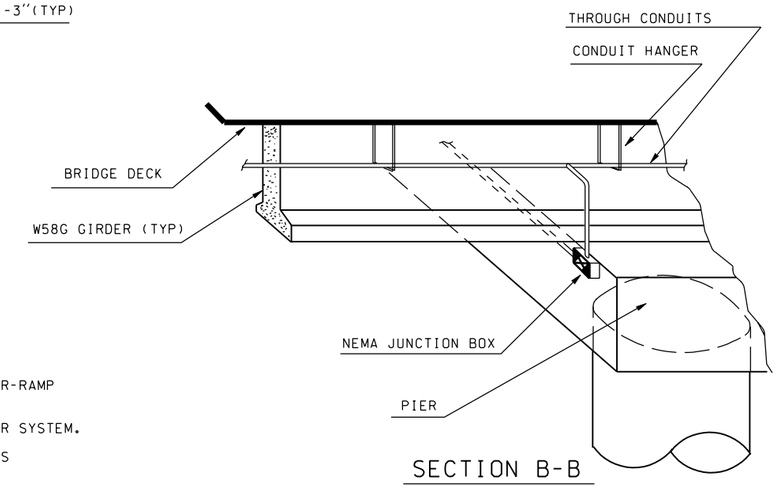

SECTION B-B

GENERAL NOTES

1. INSTALL A TYPE 2 JUNCTION BOX AT THE EDGE OF PAVEMENT OF EACH END OF THE BR-RAMP BRIDGE STRUCTURE.
2. EXTEND CONDUIT, ENTERING THE BRIDGE STRUCTURE THROUGH PIER 1, TO THE HANGER SYSTEM.
3. INSTALL LUMINAIRES ON THE BRIDGE CAPS OF PIER 2 AND PIER 3 AND RUN CONDUITS THROUGH NEMA 4X JUNCTION BOXES TO THE LUMINAIRES.
4. END CAP ALL UNUSED CONDUITS IN THE JUNCTION BOX AT EACH END OF THE BRIDGE STRUCTURE.

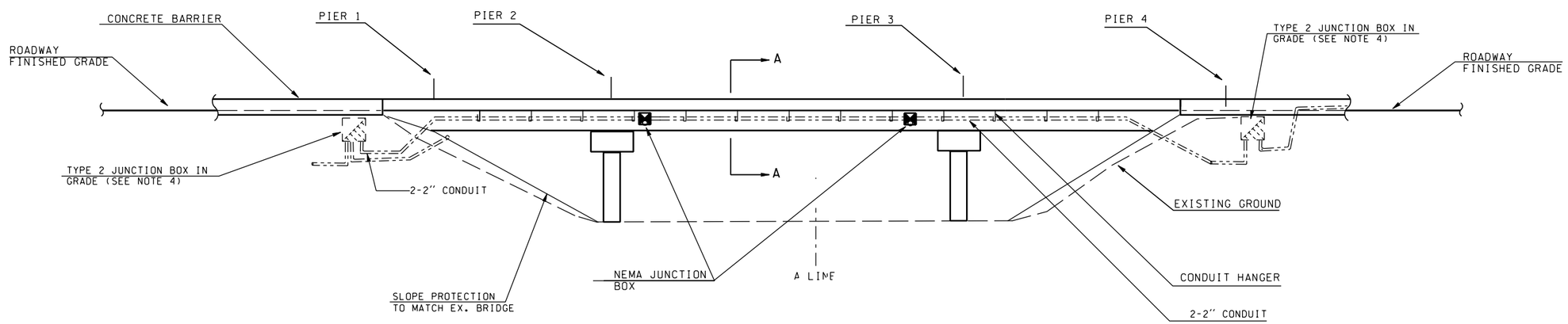

DETAIL C

(UNDERDECK STRUCTURE MOUNTED LUMINAIRE)

NOT TO SCALE

					REGION NO.	STATE	FED.AID PROJ.NO.	ENVIRONMENTAL AND ENGINEERING SERVICE CENTER	Washington State Department of Transportation	ENGLISH	5.06E
					10	WASH					
DESIGNED BY					JOB NUMBER						SHEET
ENTERED BY											OF
CHECKED BY											SHEETS
PROJ. ENGR.											
REGIONAL ADM.		5/28/99	DELETED TEXT (SEE SHEET..)	JH	CONTRACT NO.					ILLUMINATION DETAILS	
	DATE	DATE	REVISION	BY							