GENERAL NOTES:

1. USE 3 ⅂ 2.33 ALUMINUM Z-BAR OR WF 4x13 STEEL BEAM ON TRUSS STRUCTURE WITHOUT WALKWAY. USE WF 4x13 STEEL BEAM ON TRUSS STRUCTURE WITH WALKWAY.
2. ALL NUTS, BOLTS, WASHERS, AND OTHER HARDWARE SHALL BE STAINLESS STEEL.
3. IF THE SIGN STRUCTURE INCLUDES A MAINTENANCE WALKWAY, THE LUMINAIRE MOUNTING PLATE SHALL BE BOLTED TO THE WALKWAY GRATING.

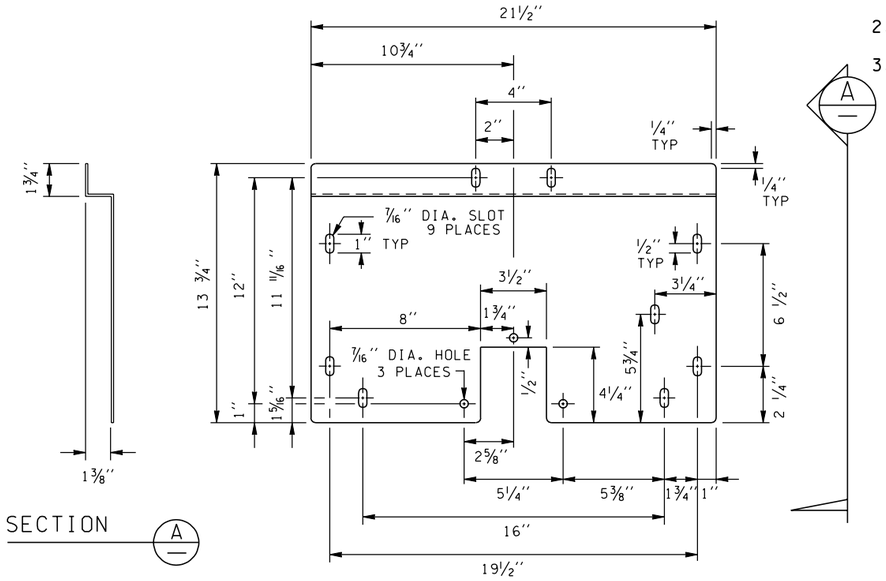


SIGN LIGHTING FIXTURE MOUNTING PLATE DETAIL

ITEM AVAILABLE FROM FIXTURE MANUFACTURER.
MATERIAL IS GALV. 10 GAGE STEEL PLATE.

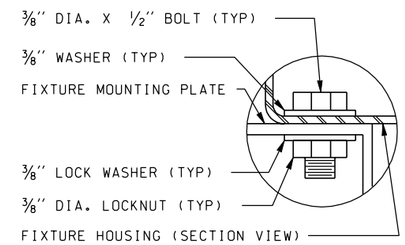


DETAIL A

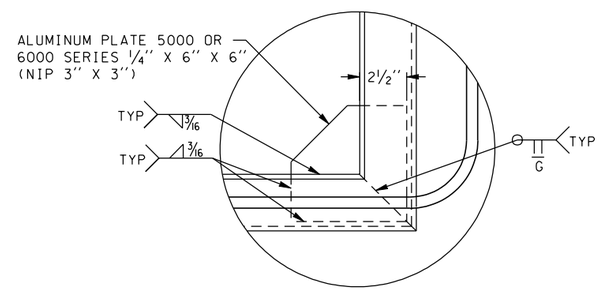


Z-BAR CORNER DETAIL

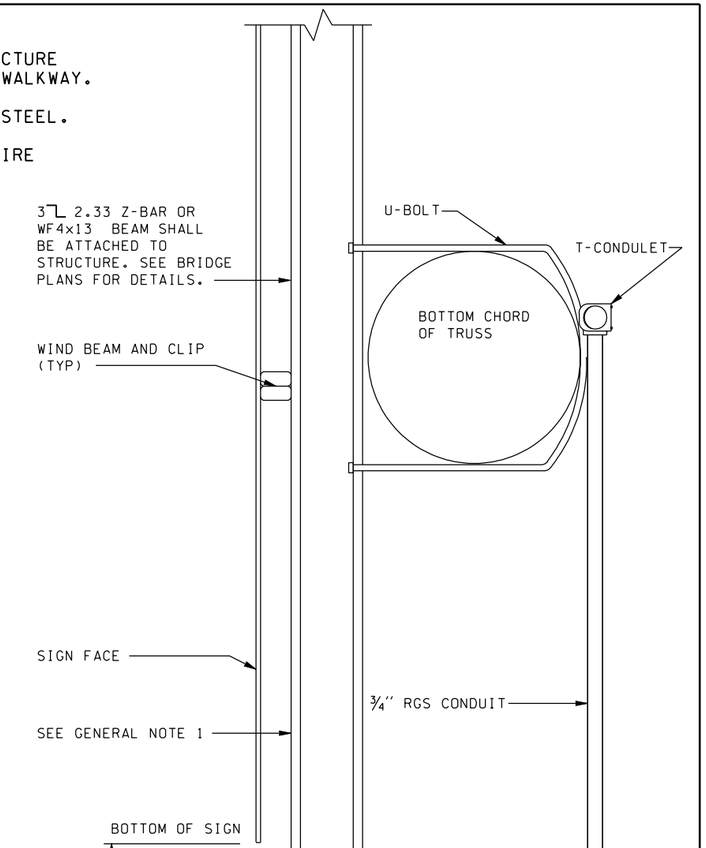


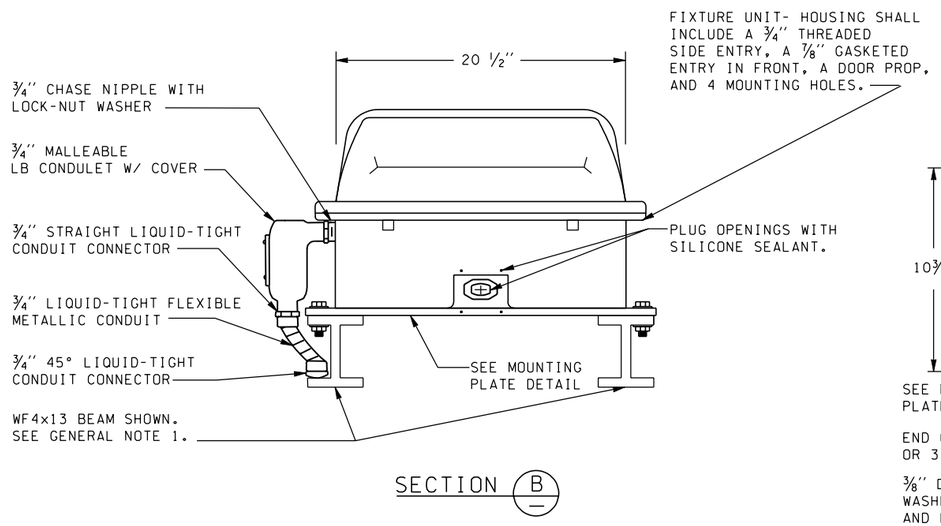


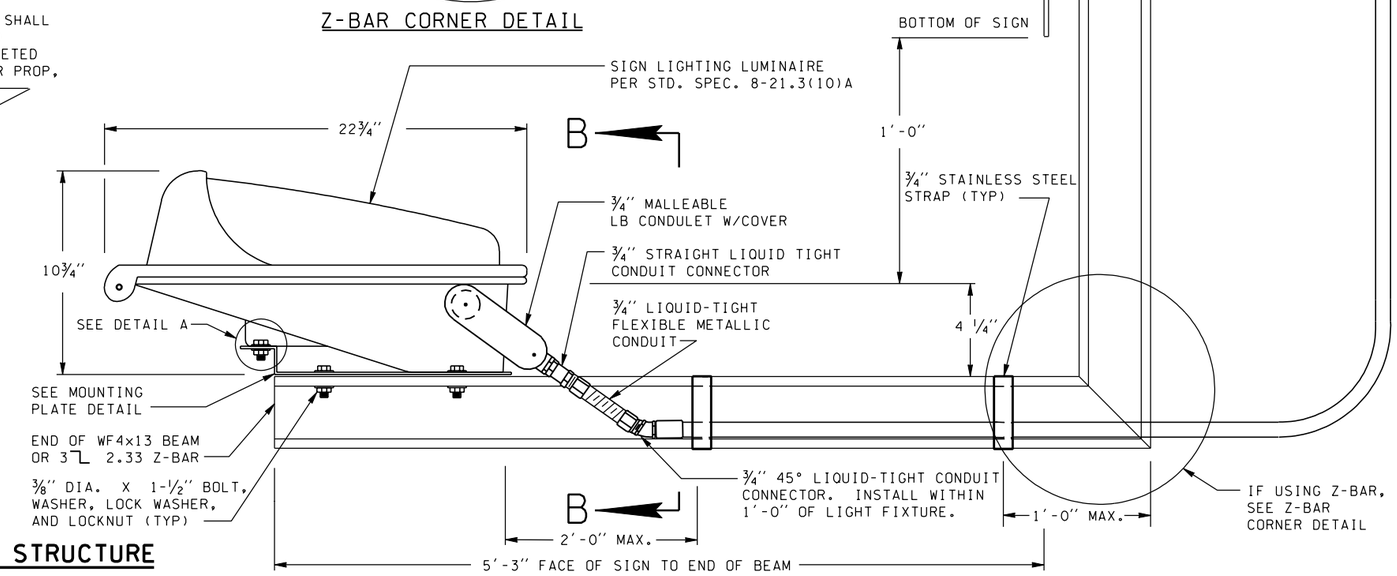


SIGN LIGHT MOUNTING DETAILS FOR TRUSS STRUCTURE

(NOT TO SCALE)

| | | | | | | |
|---|---|---|---|---|---|---|
| FILE NAME | s:\414126\Electrical\MASTER_FILES\DETAILS\signlighters_e.dgn | | | | | |
| TIME | 10:52:01 AM | | | REGION NO. | STATE | FED.AID PROJ.NO. |
| DATE | 09/11/2002 | | | 10 | WASH | |
| DESIGNED BY | | | | JOB NUMBER | | |
| ENTERED BY | | ¾" RGS CONDUIT NOTE | 3-1-01 | JH | | |
| CHECKED BY | | GENERAL NOTE CHANGE | 1-08-01 | JH | CONTRACT NO. | LOCATION NO. |
| PROJ. ENGR. | | REMOVED S.S. STRAP, DIM. CHNG. | 12-12-00 | JH | | |
| REGIONAL ADM. | | REVISION | DATE | BY | | |

P.E. STAMP BOX DATE

P.E. STAMP BOX DATE

Washington State Department of Transportation

ENGLISH
SIGN LIGHT MOUNTING DETAILS FOR TRUSS STRUCTURE

SHEET 1 OF 2

PLOT11

4.01E

SHEET OF SHEETS