GENERAL NOTE:
1. ALL NUTS, BOLTS, WASHERS, AND OTHER HARDWARE SHALL BE STAINLESS STEEL.
2. IF THE SIGN STRUCTURE INCLUDES A MAINTENANCE WALKWAY, THE LUMINAIRE MOUNTING PLATE SHALL BE BOLTED TO THE WALKWAY GRATING.
3. SEE ALSO SHEET "MONOTUBE SIGN STRUCTURE WIRING DETAILS" FOR CONDUIT, ROUTING, HARDWARE, AND OTHER DETAILS.

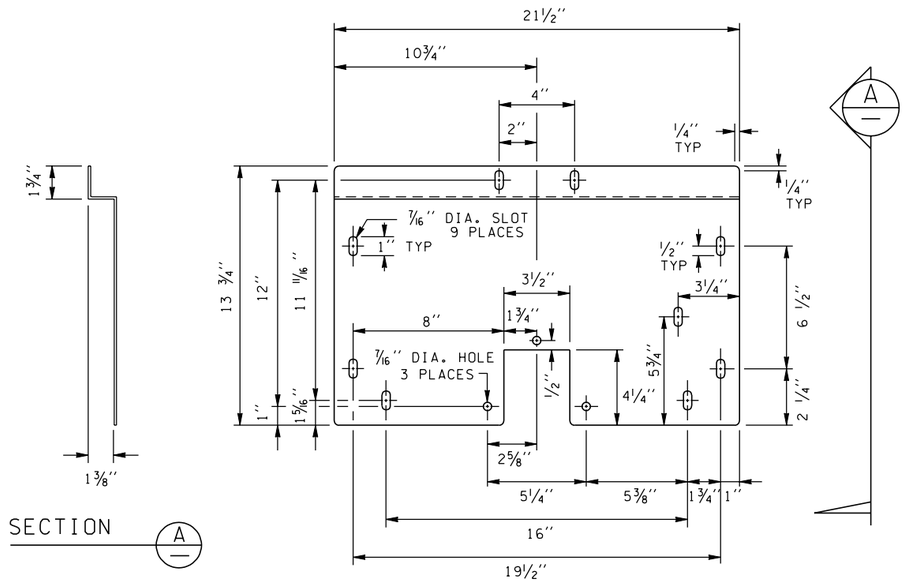

SIGN LIGHTING FIXTURE MOUNTING PLATE DETAIL

ITEM AVAILABLE FROM FIXTURE MANUFACTURER.
MATERIAL IS GALV. 10 GAGE STEEL PLATE.

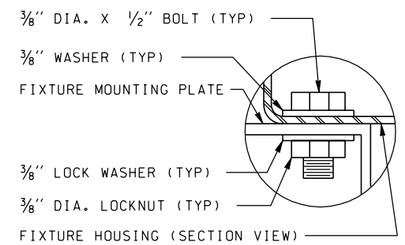

DETAIL A

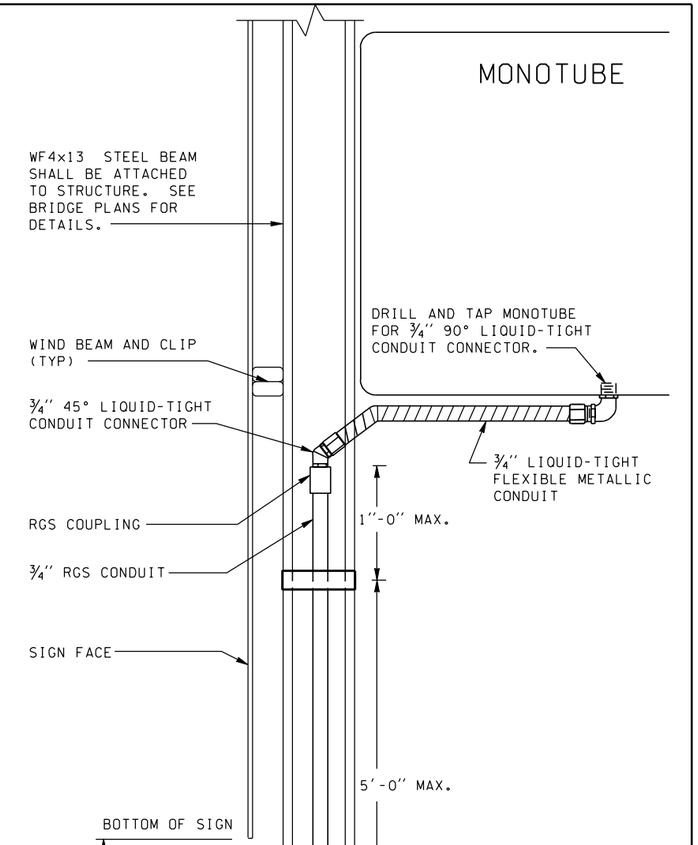

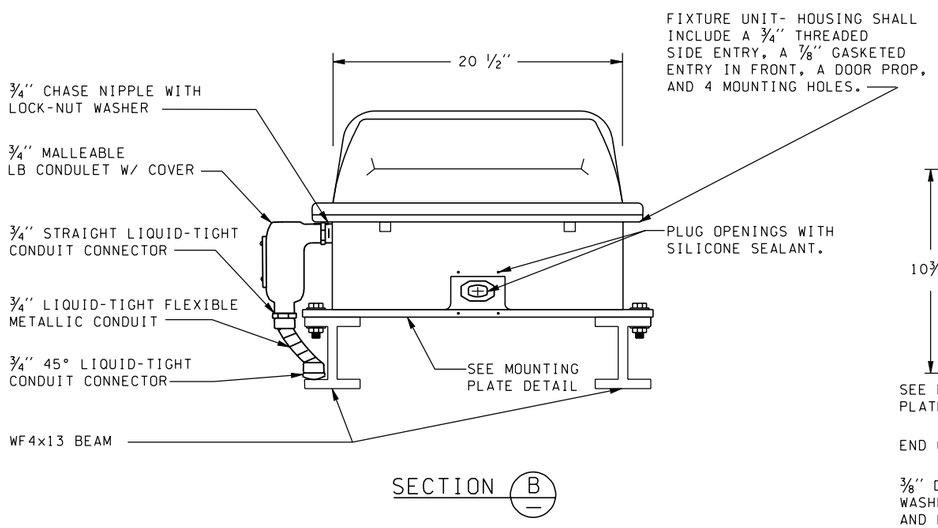

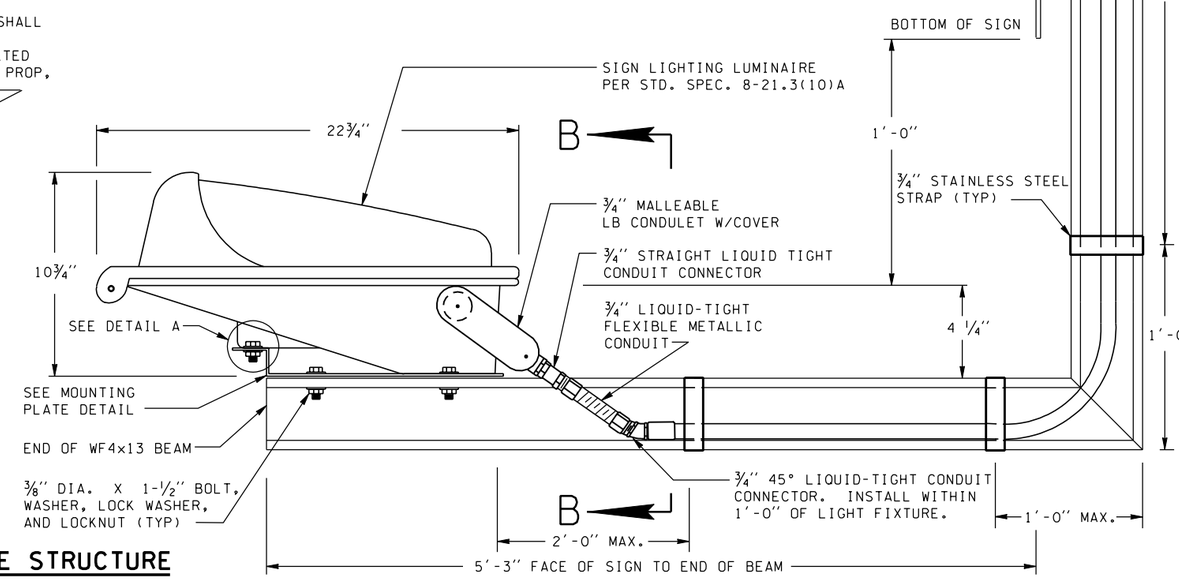

SIGN LIGHT MOUNTING DETAILS FOR MONOTUBE STRUCTURE

(NOT TO SCALE)

FILE NAME	s:\414126\Electrical\MASTER_FILES\DETAILS\signlighters_e.dgn					
TIME	10:50:01 AM			REGION NO.	STATE	FED.AID PROJ.NO.
DATE	09/11/2002			10	WASH	
DESIGNED BY				JOB NUMBER		
ENTERED BY		5-15-02				
CHECKED BY	¾" CONDUIT CONNECT. ADDED	1-08-01	JH	CONTRACT NO.		LOCATION NO.
PROJ. ENGR.	DIM. CHNG TO SIGN	12-12-00	JH			
REGIONAL ADM.	REVISION	DATE	BY			

P.E. STAMP BOX DATE

P.E. STAMP BOX DATE

Washington State Department of Transportation

ENGLISH

SIGN LIGHT MOUNTING DETAILS FOR MONOTUBE STRUCTURE

SHEET 1 OF 2

PLOT1

3.01E

SHEET OF SHEETS