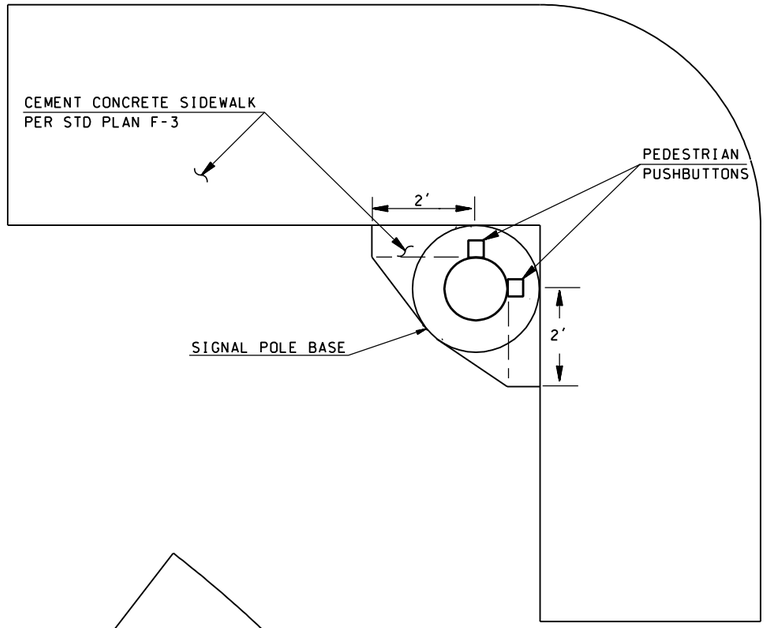

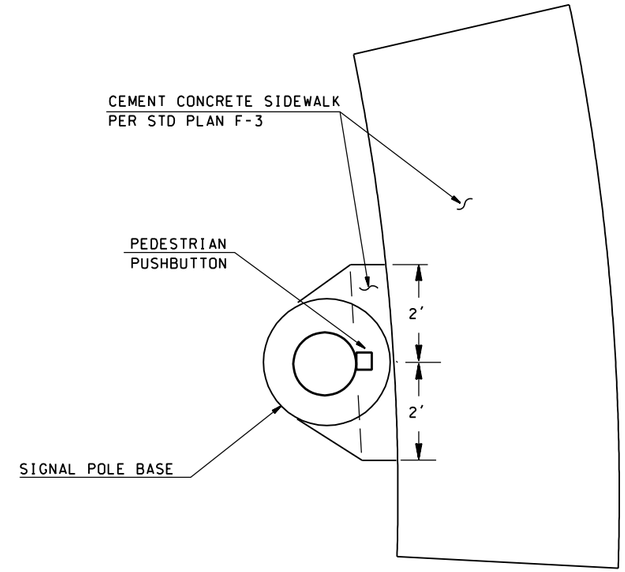

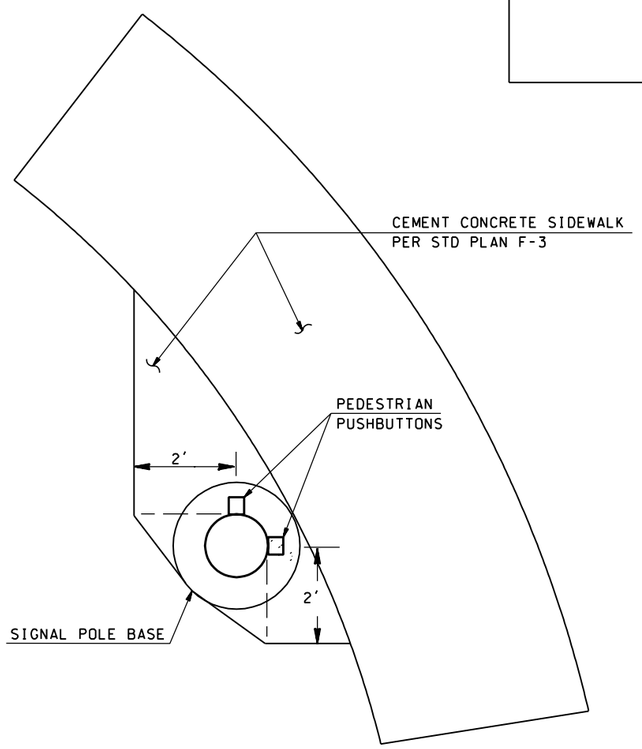

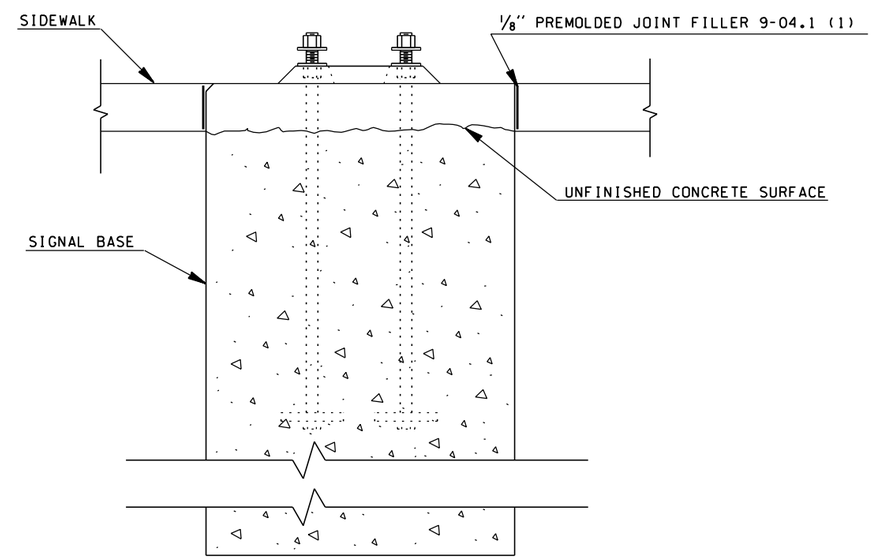

FILE NAME	s:\414126\Electrical\MASTER_FILES\DETAILS\SIGNAL_E.DGN					
TIME	07:27:49 AM			REGION NO.	STATE	FED.AID PROJ.NO.
DATE	08/14/2002			10	WASH	
				JOB NUMBER		
DESIGNED BY	WSDOT					
ENTERED BY	WSDOT					
CHECKED BY	WSDOT	NEW SHEET DESIGNATION	6/24/97	TEV	CONTRACT NO.	LOCATION NO.
PROJ. ENGR.		SIGNAL BASE DETAIL	3/19/97	TEV		
REGIONAL ADM.		REVISION	DATE	BY		

DATE
P.E. STAMP BOX

DATE
P.E. STAMP BOX

Washington State
Department of Transportation

ENGLISH

PLOT7

2.07E

SHEET
OF
SHEETS