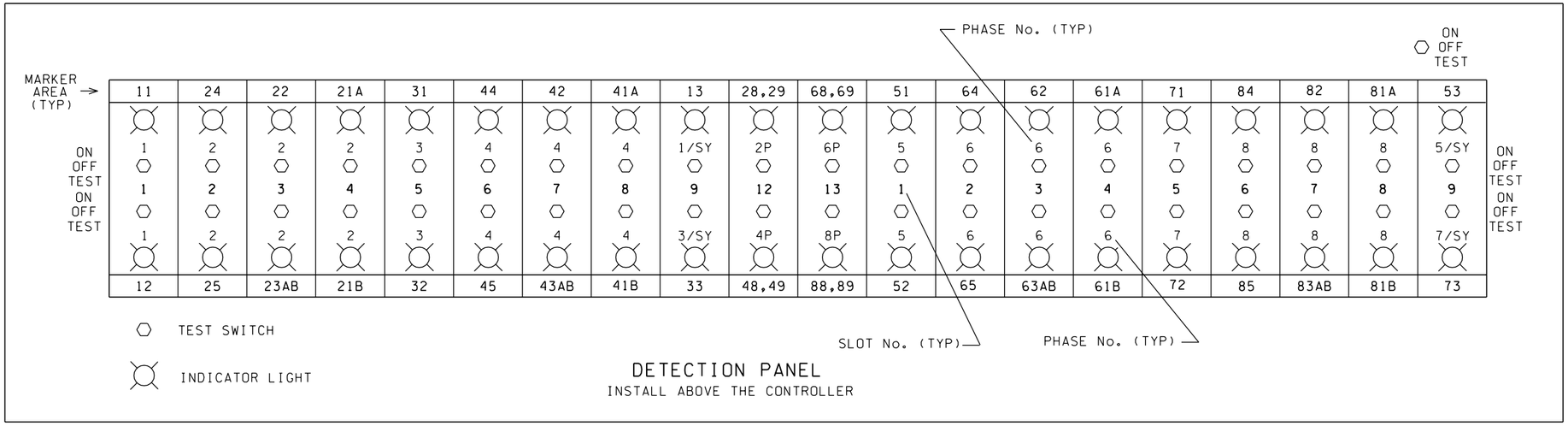

DETECTION PANEL
INSTALL ABOVE THE CONTROLLER

PREEMPTION SCHEDULE

CIRCUIT	PHASE(S)
A	2 & 5
B	4 & 7
C	1 & 6
D	3 & 8

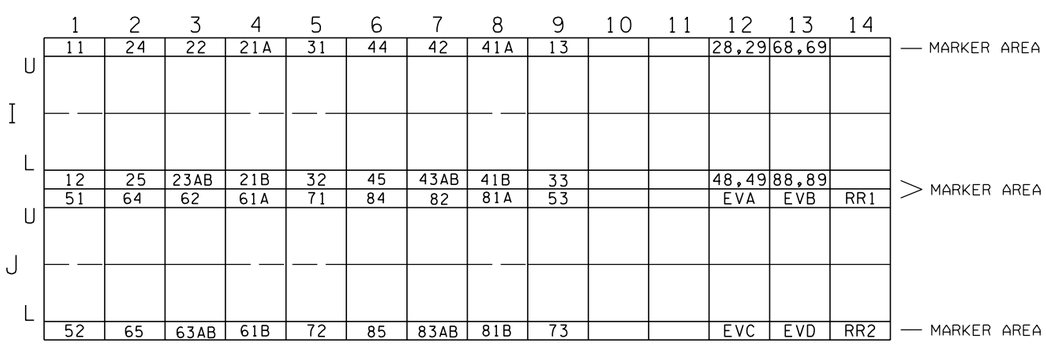

INPUT FILE MARKING DETAIL

PHASE DIAGRAM

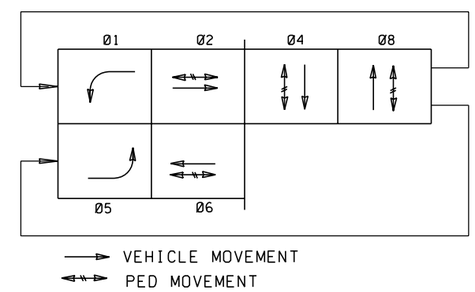

DISPLAY PANEL

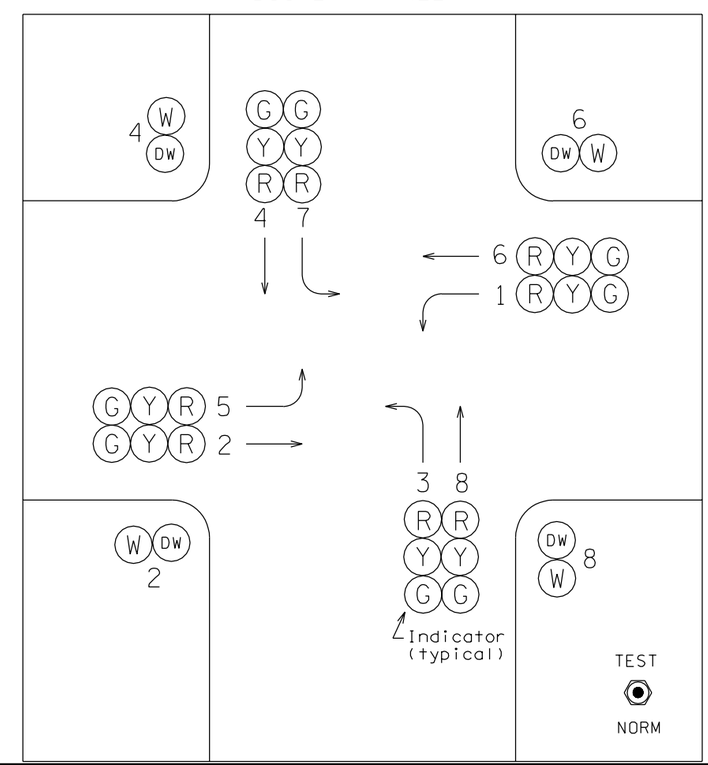

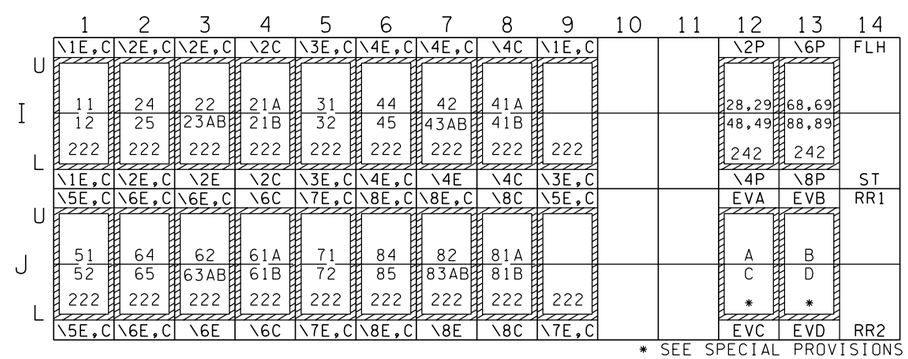

* SEE SPECIAL PROVISIONS

INPUT FILE LAYOUT - PROGRAM WAPITI W4IKS

MODULE
XX-XX INPUT NO.
XX-XX INPUT NO.
XXX MODEL TYPE

E = EXTENSION
C = CALL

PHASE DIAGRAM

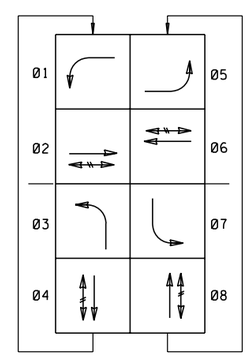

FILE NAME	s:\414126\Electrical\MASTER_FILES\DETAILS\SIGNAL_E.DGN						
TIME	07:26:07 AM	LOOP POSITIONS FOR •2 & •5 LOOPS	8/21/01	KC	REGION NO. 10	STATE WASH	FED.AID PROJ.NO.
DATE	08/14/2002	INDICATOR LT/INPUT FILE # CHNGS	4/19/01	JH			
		•ADDED NOTE	9/22/99	JH	JOB NUMBER		
DESIGNED BY	WSDOT	TEXT EDIT	3/24/99	JH			
ENTERED BY	WSDOT	ADD "WAPITI W4IKS"	1/28/99	JH			
CHECKED BY	WSDOT	DELETE MOD. # 262, 521	1/28/98	BK	CONTRACT NO.		LOCATION NO.
PROJ. ENGR.		NEW SHEET DESIGNATION	6/24/97	BK			
REGIONAL ADM.		REVISION	DATE	BY			

DATE
P.E. STAMP BOX

DATE
P.E. STAMP BOX

Washington State Department of Transportation

ENGLISH

INPUT FILE AND DISLAY PANEL

PLOT4

2.04E

SHEET OF SHEETS