PLOT2 s:\414126\Electrical\MASTER_FILES\DETAILS\barcondjb.dgn
08/13/2002 10:45:37 AM
MButhN

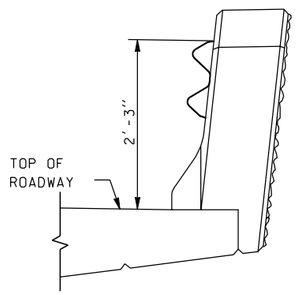

END VIEW

WBEAM SHOWN
WITH "D" CONNECTION

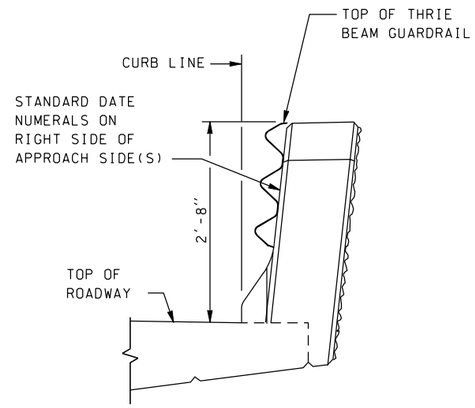

END VIEW

THRIE BEAM SHOWN
WITH "D" CONNECTION

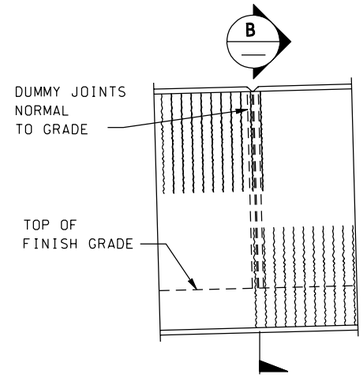

VIEW A/1

ALL CHAMFERS ¾"

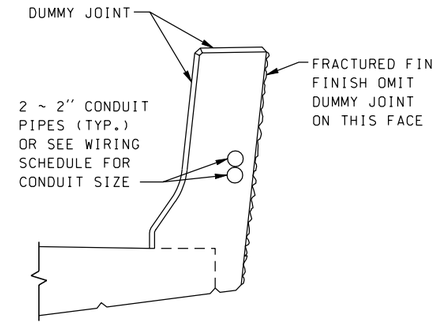

SECTION B

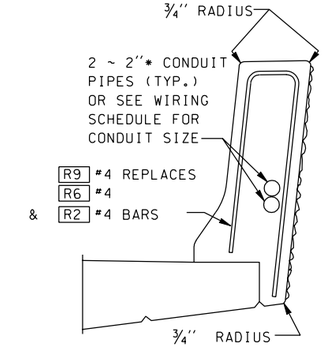

SLIPFORM ALTERNATE

SEE "TYPICAL SECTION - TRAFFIC BARRIER"
FOR ADDITIONAL DETAILS

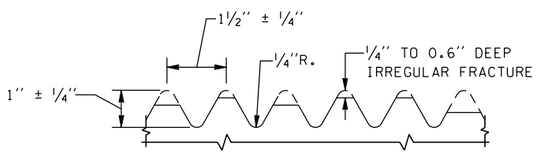

FRACTURED FIN FINISH

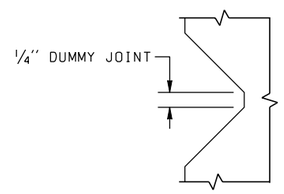

DUMMY JOINT DETAIL

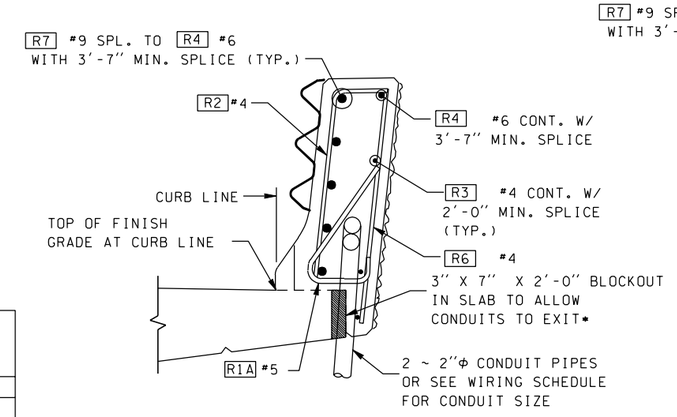

SECTION C/? BRIDGE

FOR DETAILS NOT SHOWN SEE "OUTSIDE ELEVATION"
AND "TYPICAL SECTION - TRAFFIC BARRIER"

* BLOCKOUT WIDTH MAY BE INCREASED TO 6" TO ALLOW CONDUITS OF A LARGER DIAMETER THAN 2" TO EXIT BARRIER OR WALL WITHOUT REBAR STEEL CONFLICT

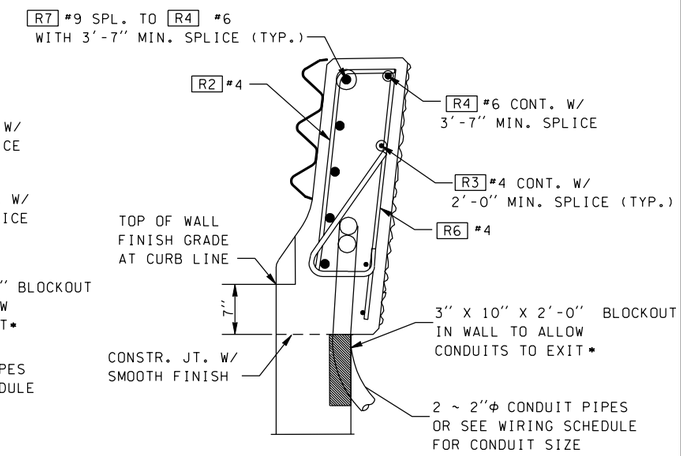

SECTION C/? WALL

DETAIL FOR RETAINING WALL OR
WINGWALL. FOR REINFORCING NOT
SHOWN SEE STD. PLAN D-1a & D-1b
OR WINGWALL PLAN. FOR DETAILS
NOT SHOWN SEE SECTION C/? BRIDGE

JUNCTION BOX LOCATIONS

STATION	OFFSET

TRAFFIC BARRIER BAR LIST

ALL REINFORCING SHALL BE AASHTO M31, GR. 60.

MARK	SIZE	LENGTH	BENDING DIAGRAM (ALL DIMENSIONS ARE OUT TO OUT)
R1	5	3'-8"	
R1A	5	(A)	
R2	4	2'-11"	
R2A	4	3'-5"	
R3	4	(A)	STR.
R4	6	(A)	STR.
R6	4	3'-0"	STR.
R7	9	14'-0"	STR.
R9	4	5'-11"	

(A) DETERMINE FROM PLANS

FOR W1 & W2 BARS SEE WINGWALL
OR RETAINING WALL PLANS.
FOR S1 & S2 BARS SEE BARLIST

≈ DIMENSIONS TO POINTS OF INTERSECTION

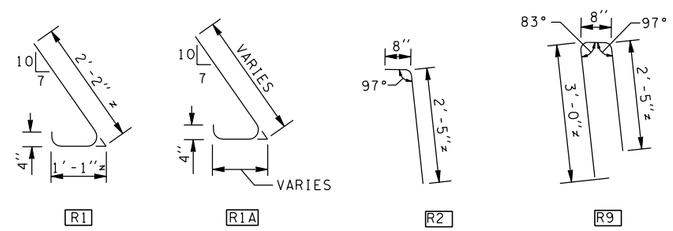

					REGION NO.	STATE	FED.AID PROJ.NO.
					10	WASH	
DESIGNED BY					JOB NUMBER		
ENTERED BY J. HARVEY							
CHECKED BY							
PROJ. ENGR.							
REGIONAL ADM.		4-4-01	NEW BARRIER SHEET	JH	CONTRACT NO.		
	DATE	DATE	REVISION	BY			

Washington State Department of Transportation

STANDARD
TRAFFIC BARRIERS
ENGLISH

TRAFFIC BARRIER- F-SHAPE
DETAIL 2 OF 3

1.02E

SHEET 2 OF 3 SHEETS