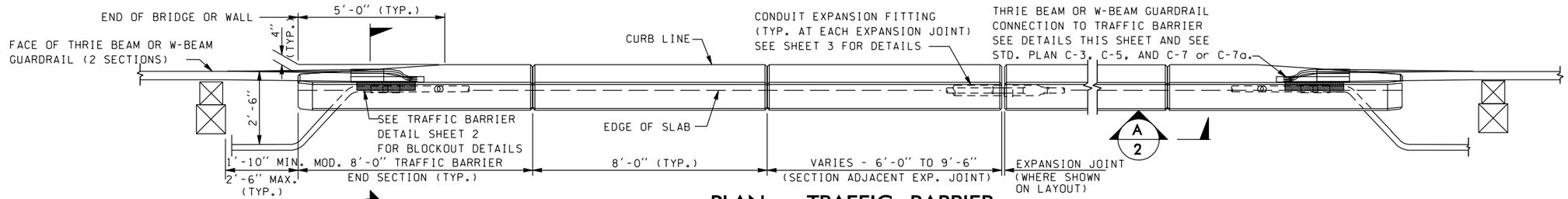

PLAN – TRAFFIC BARRIER

BARRIER CONTINUOUS BETWEEN ROADWAY EXPANSION JOINTS.
CONSTRUCTION JOINTS WITH SHEAR KEYS ARE PERMISSIBLE AT DUMMY JOINT LOCATIONS.
FORM JOINTS BETWEEN DUMMY JOINTS SHALL NOT BE PERMITTED.

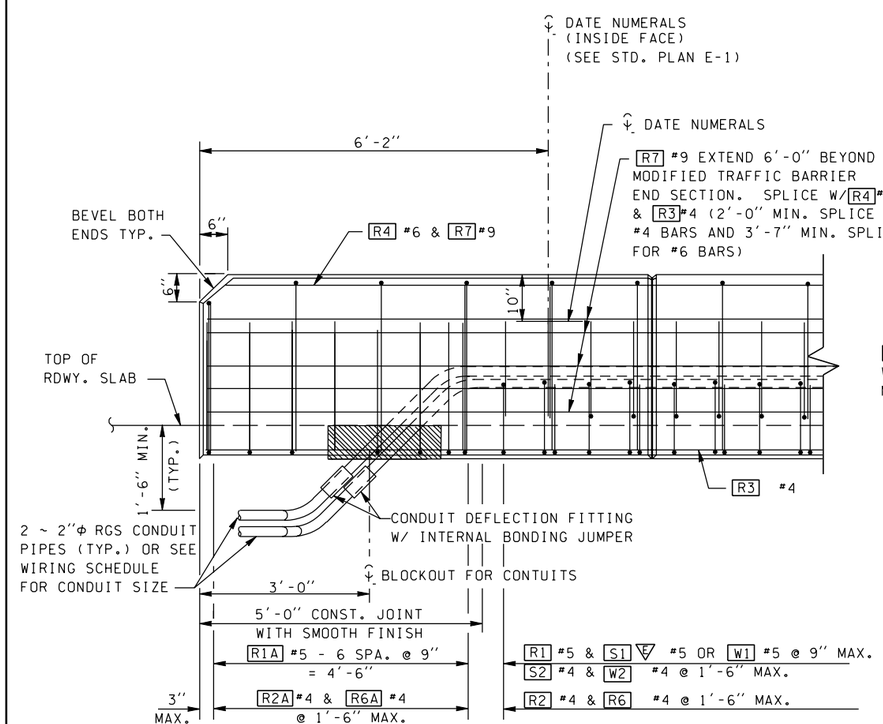

OUTSIDE ELEVATION END OF MODIFIED TRAFFIC BARRIER

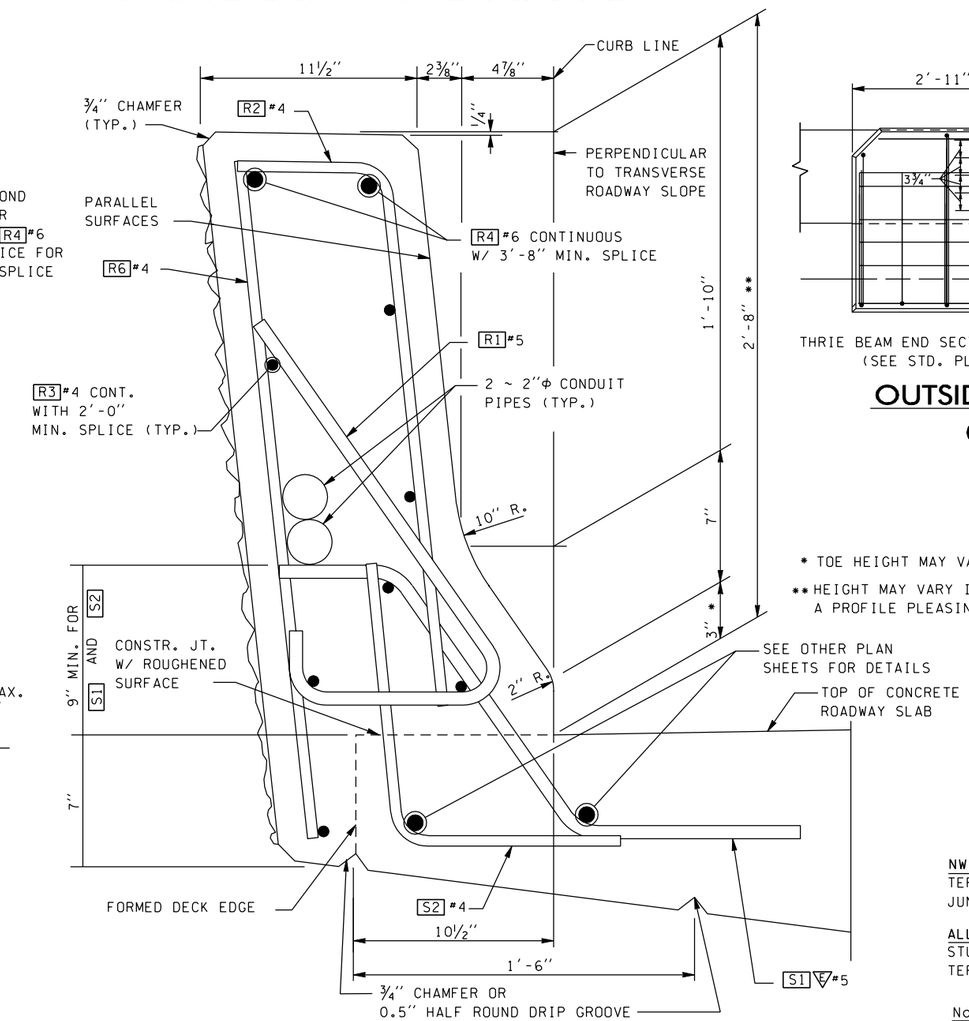

* TOE HEIGHT MAY VARY, 2" MIN. TO 6" MAX.
** HEIGHT MAY VARY IF REQUIRED TO PROVIDE A PROFILE PLEASING TO THE EYE

TYPICAL SECTION – TRAFFIC BARRIER

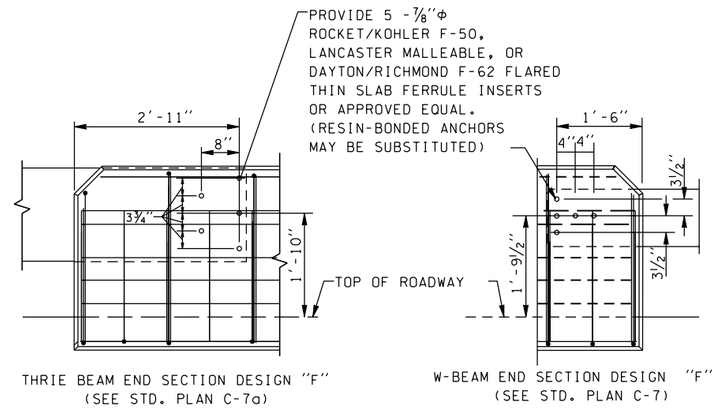

THRIE BEAM END SECTION DESIGN "F" (SEE STD. PLAN C-7a)

W-BEAM END SECTION DESIGN "F" (SEE STD. PLAN C-7)

OUTSIDE ELEVATION TRAFFIC BARRIER GUARDRAIL CONNECTION

(WHERE SHOWN ON LAYOUT)

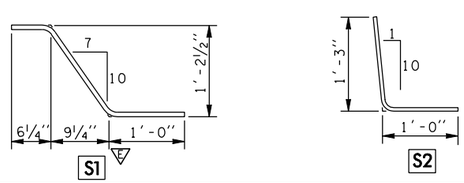

NW REGION:
TERMINATE EACH CONDUIT PIPE AT SEPARATE TYPE 1 JUNCTION BOXES OFF END OF BRIDGE AS SHOWN ON LAYOUT.

ALL OTHER REGIONS:
STUB OUT & CAP 3'-4" FROM END OF BRIDGE BARRIER, EXCEPT TERMINATE IN JUNCTION BOX WHERE AND WHEN SHOWN ON LAYOUT.

Note to Designer: The non-applicable text should be removed from the actual bridge plans.

	DATE	DATE	REVISION	BY
DESIGNED BY				
ENTERED BY J. HARVEY				
CHECKED BY				
PROJ. ENGR.				
REGIONAL ADM.		4-4-01	NEW BARRIER SHEET	JH

REGION NO.	STATE	FED.AID PROJ.NO.
10	WASH	
JOB NUMBER		
CONTRACT NO.		

Washington State Department of Transportation

STANDARD TRAFFIC BARRIERS ENGLISH

TYPE F - TRAFFIC BARRIER DETAIL 1 OF 3

1.01E

SHEET 1 OF 3 SHEETS

s:\414126\Electrical\Web\dgn\barcondjb.dgn
PLOT1 06:50:54 AM 06/18/2002 MbuthN