SR 99: ALASKAN WAY VIADUCT & SEAWALL REPLACEMENT PROJECT

Draft Environmental Impact Statement
Appendix B
Alternatives Description and Construction Methods Technical Memorandum

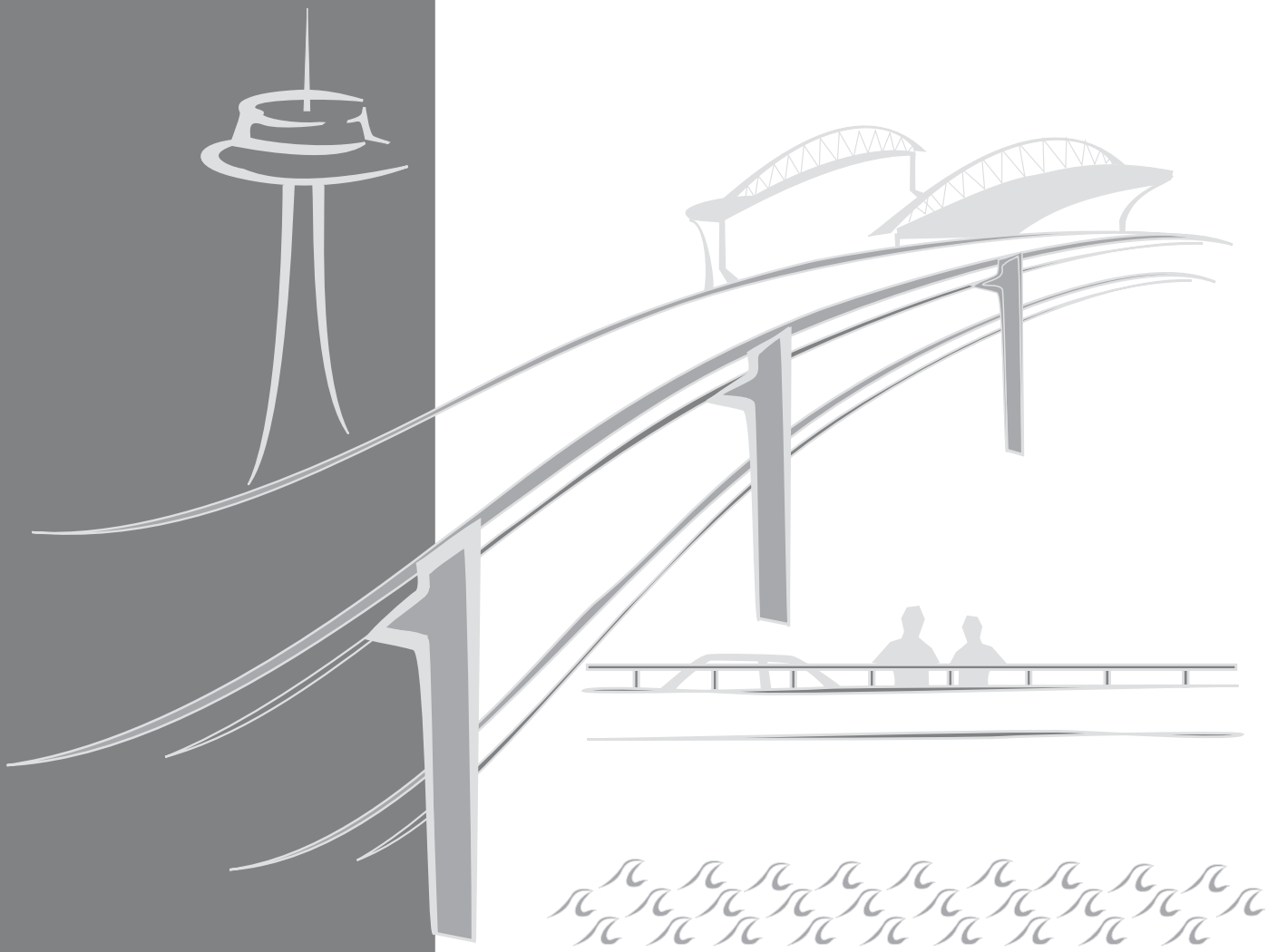

MARCH 2004

Submitted by:
PARSONS BRINCKERHOFF QUADE & DOUGLAS, INC.

Prepared by:
PARAMETRIX

U.S. Department of Transportation Federal Highway Administration

Washington State Department of Transportation

City of Seattle

This Page Intentionally Left Blank

SR 99: ALASKAN WAY VIADUCT & SEAWALL REPLACEMENT PROJECT

Draft EIS
Alternatives Description and Construction Methods Technical Memorandum

AGREEMENT NO. Y-7888
FHWA-WA-EIS-04-01-D

Submitted to:

Washington State Department of Transportation
Alaskan Way Viaduct and Seawall Replacement Project Office
999 Third Avenue, Suite 2424
Seattle, WA 98104

The SR 99: Alaskan Way Viaduct & Seawall Replacement Project is a joint effort between the Washington State Department of Transportation (WSDOT), the City of Seattle, and the Federal Highway Administration (FHWA). To conduct this project, WSDOT contracted with:

Parsons Brinckerhoff Quade & Douglas, Inc.
999 Third Avenue, Suite 2200
Seattle, WA 98104

In association with:
BERGER/ABAM Engineers Inc.
BJT Associates
David Evans and Associates, Inc.
Entech Northwest
EnviroIssues, Inc.
Harvey Parker & Associates, Inc.
Jacobs Civil Inc.
Larson Anthropological Archaeological Services Limited
Mimi Sheridan, AICP
Parametrix
Preston, Gates, Ellis, LLP
ROMA Design Group
RoseWater Engineering, Inc.
Shannon & Wilson, Inc.
Taylor Associates, Inc.
Tom Warne and Associates, LLC
William P. Ott

This Page Intentionally Left Blank

TABLE OF CONTENTS

Chapter 1 Introduction 1
1.1 Project Purpose and Need 1
1.1.1 Purpose of the Proposed Project 1
1.1.2 Reason the Project Is Needed 1
1.2 Project Boundaries 2
1.3 Existing Conditions 2
1.3.1 Existing Conditions of the Alaskan Way Viaduct 2
1.3.2 Existing Conditions of the Alaskan Way Surface Street 5
1.3.3 Existing Conditions of the Alaskan Way Seawall 7
1.4 Alternatives and Options Overview 11
1.4.1 Rebuild Alternative 11
1.4.2 Aerial Alternative and Options 13
1.4.3 Tunnel Alternative and Options 13
1.4.4 Bypass Tunnel Alternative and Options 14
1.4.5 Surface Alternative and Options 14
1.5 Construction Methods, Durations, and Sequencing 15

Chapter 2 Alternatives and Options 17
2.1 No Build Alternative 17
2.1.1 Scenario 1 – Continued Operation of the Viaduct and Seawall With Continued Maintenance 17
2.1.2 Scenario 2 – Sudden Unplanned Loss of the Viaduct and/or Seawall Without Major Collapse or Injury 19
2.1.3 Scenario 3 – Catastrophic Failure and Collapse of the Viaduct and/or Seawall 20
2.2 Elements Common to All Build Alternatives 20
2.2.1 Flexible Transportation Package 20
2.2.2 Utilities Relocations 22
2.2.3 Colman Dock Ferry Terminal Access Road and Relocation of Washington Street Boat Landing 23
2.2.4 No Seawall Construction at Pier 66 Between Blanchard and Battery Streets Is Planned 24
2.3 Rebuild Alternative 24
2.3.1 South – S. King Street to S. Spokane Street 26
2.3.2 Central – S. King Street to Battery Street Tunnel 27
2.3.3 North Waterfront – Pike Street to Broad Street 29
2.3.4 North – Battery Street Tunnel to Ward Street 30
2.3.5 Seawall – S. King Street to Myrtle Edwards Park 30
2.4 Aerial Alternative 30
2.4.1 South – S. Spokane Street to S. King Street 31
2.4.2 Central – S. King Street to Battery Street Tunnel 34
2.4.3 North Waterfront – Pike Street to Myrtle Edwards Park 35
2.4.4 Seawall – S. King Street to Myrtle Edwards Park 38
2.5 Tunnel Alternative 38
2.5.1 South – S. Spokane Street to S. King Street 39
2.5.2 Central – S. King Street to the Battery Street Tunnel 42
2.5.3 North Waterfront – Pike Street to Myrtle Edwards Park 44
2.5.4 North – Battery Street Tunnel to Ward Street 44
2.5.5 Seawall – S. King Street to Myrtle Edwards Park 45

2.6 Bypass Tunnel Alternative 45
2.6.1 South – S. Spokane Street to S. King Street 46
2.6.2 Central – S. King Street to Battery Street Tunnel 48
2.6.3 North Waterfront – Pike Street to Myrtle Edwards Park 49
2.6.4 North – Battery Street Tunnel to Ward Street 50
2.6.5 Seawall – S. King Street to Myrtle Edwards Park 50
2.7 Surface Alternative 51
2.7.1 South – S. Spokane Street to S. King Street 51
2.7.2 Central – S. King Street to Battery Street Tunnel 54
2.7.3 North Waterfront – Pike Street to Myrtle Edwards Park 55
2.7.4 North – Battery Street Tunnel to Ward Street 55
2.7.5 Seawall – S. King Street to Myrtle Edwards Park 56

Chapter 3 Construction Methods 57

3.1 Construction Elements Common to All Alternatives 57
3.1.1 Construction Assumptions 57
3.1.2 Construction Staging Areas 58
3.1.3 Construction Haul Routes 59
3.1.4 Types of Construction Equipment 60
3.1.5 Utilities 62
3.1.6 Colman Dock Ferry Terminal Access Road and Relocation of the Washington Street Boat Landing 63
3.1.7 Removal of the Alaskan Way Viaduct Structure 63
3.1.8 Construction Mitigation 64
3.2 Rebuild Alternative 73
3.2.1 South – S. Spokane Street to S. King Street 73
3.2.2 Central – S. King Street to Battery Street Tunnel 76
3.2.3 North Waterfront – Pike Street to Myrtle Edwards Park 80
3.2.4 North – Battery Street Tunnel to Ward Street 80
3.2.5 Seawall – S. King Street to Myrtle Edwards Park 80
3.3 Aerial Alternative 82
3.3.1 South – S. Spokane Street to S. King Street 83
3.3.2 Central – S. King Street to Battery Street Tunnel 85
3.3.3 North Waterfront – Pike Street to Myrtle Edwards Park 87
3.3.4 North – Battery Street Tunnel to Ward Street 89
3.3.5 Seawall – S. King Street to Myrtle Edwards Park 91
3.4 Tunnel Alternative 92
3.4.1 South – S. Spokane Street to S. King Street 92
3.4.2 Central – S. King Street to Battery Street Tunnel 94
3.4.3 North Waterfront – Pike Street to Myrtle Edwards Park 98
3.4.4 North – Battery Street Tunnel to Ward Street 99
3.4.5 Seawall – S. King Street to Myrtle Edwards Park 99
3.5 Bypass Tunnel Alternative 99
3.5.1 South – S. Spokane Street to S. King Street 99
3.5.2 Central – S. King Street to Battery Street Tunnel 100
3.5.3 North Waterfront – Pike Street to Myrtle Edwards Park 101
3.5.4 North – Battery Street Tunnel to Ward Street 102
3.5.5 Seawall – S. King Street to Myrtle Edwards Park 102

3.6 Surface Alternative 102
3.6.1 South – S. Spokane Street to S. King Street 102
3.6.2 Central – S. King Street to Battery Street Tunnel 103
3.6.3 North Waterfront – Pike Street to Myrtle Edwards Park 104
3.6.4 North – Battery Street Tunnel to Ward Street 105
3.6.5 Seawall – S. King Street to Myrtle Edwards Park 105

Chapter 4 Construction Sequencing 107
4.1 Construction Sequencing Overview 107
4.1.1 Traffic Stage 1 108
4.1.2 Utility Relocations in Stage 1 108
4.2 Rebuild Alternative Construction Sequencing 110
4.2.1 Traffic Stage 1 – Site Preparation - 18 Months 110
4.2.2 Traffic Stage 2 – Construction of Seawall - 24 Months 110
4.2.3 Traffic Stage 3 – S. King Street to Battery Street Tunnel - 54 Months 110
4.2.4 Traffic Stage 3 – S. Hanford Street to S. King Street - 30 Months (Concurrent with Traffic Stage 3 – S. King Street to BST) 111
4.2.5 Traffic Stage Four – Rebuild Street Restoration and Project Closeout - 8 Months 112
4.3 Aerial Alternative Construction Sequencing 112
4.3.1 Traffic Stage 1 – Site Preparation - 18 Months 112
4.3.2 Traffic Stage 2 – Construction of Seawall - 36 Months 113
4.3.3 Traffic Stage 3 –Construct Southbound Aerial (Pike Street to BST) - 30 Months 114
4.3.4 Traffic Stage 4 – Construct Aerial Structure and Perform Northbound Battery Street Tunnel Upgrade - 48 Months 114
4.3.5 Traffic Stage 5 – Surface Restoration - 15 Months 115
4.4 Tunnel Alternative Construction Sequencing 115
4.4.1 Traffic Stage 1 – Site Preparation - 18 Months 115
4.4.2 Traffic Stage 2 – Construction of Seawall and Southbound Tunnel Construction - 24 Months 116
4.4.3 Traffic Stage 3 – Southbound Aerial Construction (Pike Street to BST) and Southbound Battery Street Tunnel Upgrade - 36 Months 117
4.4.4 Traffic Stage 2 or 3 – SR 99 Traffic Either on Viaduct or Using the Broad Street Detour 118
4.4.5 Traffic Stage 4 – Removal of Viaduct and Construction of Northbound Aerial Structure From Pike Street to BST, Northbound BST Upgrades, and East Half of SR 519 Ramp Configuration - 36 Months 118
4.4.6 Traffic Stage 5 – Surface Restoration and Project Closeout - 13 Months 119
4.5 Bypass Tunnel Alternative Construction Sequencing 119
4.5.1 Traffic Stage 1 – Site Preparation - 18 Months 119
4.5.2 Traffic Stage 2 – Construction of Seawall and Southbound Tunnel - 24 Months 120
4.5.3 Traffic Stage 3 – Southbound Aerial Construction (Pike Street to BST) and Southbound Battery Street Tunnel Upgrade - 30 Months 121
4.5.4 Traffic Stage 2 or 3 – Southbound Aerial Construction (Pike Street to BST) and Southbound Battery Street Tunnel Upgrade - 30 Months 121
4.5.5 Traffic Stage 4 – Removal of Viaduct and Construction of Northbound Aerial Structure From Pike Street to BST, Northbound BST Upgrades, and East Half of SR 519 Ramp Configuration - 30 Months 122
4.5.6 Traffic Stage 5 – Surface Restoration and Project Closeout - 18 Months 123
4.6 Surface Alternative Construction Sequencing 123
4.6.1 Traffic Stage 1 –Site Preparation - 18 Months 123
4.6.2 Traffic Stage 2 – Construction of Seawall - 30 Months 124

4.6.3 Traffic Stage 3 - Southbound Aerial (Pike Street to BST) and Southbound Battery Street Tunnel Upgrade - 30 Months 124
4.6.4 Traffic Stage 2 or 3 – Route Alaskan Way Surface Traffic Under Existing Viaduct 125
4.6.5 Traffic Stage 4 – Removal of Viaduct and Completion of Structure - 30 Months 125
4.6.6 Traffic Stage 5 – Surface Restoration and Project Closeout - 8 Months 126

Chapter 5 Cumulative Impacts 127

Chapter 6 References 133

LIST OF EXHIBITS

Exhibit 1-1. Existing Alaskan Way Traffic Lanes and Parking 6
Exhibit 1-2. Project Vicinity Map Showing Locations of Various Seawall Types 8
Exhibit 1-3. Cross-Sections of Various Alaskan Way Seawall Types 9
Exhibit 1-4. Alternatives and Options Chart 12
Exhibit 1-5. Estimated Construction Durations for Each Alternative 15
Exhibit 2-1. Rebuild Alternative 25
Exhibit 2-2. Aerial Alternative 32
Exhibit 2-3. Tunnel Alternative 40
Exhibit 2-4. Bypass Tunnel Alternative 47
Exhibit 2-5. Surface Alternative 52
Exhibit 3-1. Bypass or Tunnel Construction Steps 61
Exhibit 3-2. Northbound Tunnel Construction Steps 95
Exhibit 4-1. Construction Duration Overview (Stage 2 through Completion) 107
Exhibit 4-2. Traffic Stage 1 – Construction Activities and Durations 108
Exhibit 4-3. Traffic Stage 2 – Rebuild Alternative Construction Activities and Durations 111
Exhibit 4-4. Traffic Stage 3 (S. King Street to BST) – Rebuild Alternative Construction Activities and Durations 111
Exhibit 4-5. Traffic Stage 3 (S. Hanford Street to S. King Street) – Rebuild Alternative Construction Activities and Durations (Concurrent with Exhibit 4-4) 112
Exhibit 4-6. Traffic Stage 1 – Aerial Alternative Construction Activities and Durations 113
Exhibit 4-7. Traffic Stage 2 – Aerial Alternative Construction Activities and Durations 113
Exhibit 4-8. Traffic Stage 3 – Aerial Alternative Construction Activities and Durations 114
Exhibit 4-9. Traffic Stage 4 – Aerial Alternative Construction Activities and Durations 115
Exhibit 4-10. Traffic Stage 5 – Aerial Alternative Construction Activities and Durations 115
Exhibit 4-11. Traffic Stage 1 – Tunnel Alternative Construction Activities and Durations 116
Exhibit 4-12. Traffic Stage 2 – Tunnel Alternative Construction Activities and Durations 117

Exhibit 4-13. Traffic Stage 3 – Tunnel Alternative Construction Activities and Durations 117
Exhibit 4-14. Traffic Stage 2 or 3 – Tunnel Alternative Construction Activities and Durations 118
Exhibit 4-15. Traffic Stage 4 – Tunnel Alternative Construction Activities and Durations 119
Exhibit 4-16. Traffic Stage 1 – Bypass Tunnel Alternative Construction Activities and Durations 120
Exhibit 4-17. Traffic Stage 2 – Bypass Tunnel Alternative Construction Activities and Duration 120
Exhibit 4-18. Traffic Stage 3 – Bypass Tunnel Alternative Construction Activities and Duration 121
Exhibit 4-19. Traffic Stage 2 or 3 – Bypass Tunnel Alternative Construction Activities and Duration 122
Exhibit 4-20. Traffic Stage 4 – Bypass Tunnel Alternative Construction Activities and Duration 122
Exhibit 4-21. Traffic Stage 1 – Surface Alternative Construction Activities and Durations 123
Exhibit 4-22. Traffic Stage 2 – Surface Alternative Construction Activities and Durations 124
Exhibit 4-23. Traffic Stage 3 – Surface Alternative Construction Activities and Durations 125
Exhibit 4-24. Traffic Stage 2 or 3 – Route Alaskan Way Surface Traffic Under Existing Viaduct 125
Exhibit 4-25. Traffic Stage 4 – Surface Alternative Construction Activities and Durations 126

ACRONYMS

AWV	Alaskan Way Viaduct
BMP	Best Management Practice
BNSF	Burlington Northern Santa Fe Railway Company
BST	Battery Street Tunnel
City	City of Seattle
CEVP	Cost Estimate Validation Process
EIS	Environmental Impact Statement
FHWA	Federal Highway Administration
kV	kilovolt
I-5	Interstate 5
Seawall	Alaskan Way Seawall
SIG	Seattle International Gateway
SOV	Single-occupancy vehicle
SR 99	State Route 99
WSDOT	Washington State Department of Transportation

This Page Intentionally Left Blank

Chapter 1 INTRODUCTION

This memorandum describes the alternatives and options being considered for replacing the Alaskan Way Viaduct and the Alaskan Way Seawall. These alternatives and options will be evaluated in the Draft Environmental Impact Statement (EIS) for this project.

Chapter 2 describes each of the six alternatives and options individually from south to north in terms of the proposed structures and facilities. The Alaskan Way Viaduct (AWV) Corridor's role in the transportation system for the City of Seattle and the Puget Sound region is described in Appendix C, Transportation Discipline Report.

Chapter 3 describes the construction methods and approaches that are anticipated for each alternative and option. The descriptions are intended to provide a general description of how the project might be constructed, allowing leeway through the design and contracting process for additional methods and approaches to be proposed.

Chapter 4 of this memorandum describes the construction sequencing and durations for each alternative. Construction for each alternative has been broken down into four or five different construction stages. For each construction stage, estimated duration is reported and the likely traffic routing plan is described.

1.1 Project Purpose and Need

1.1.1 Purpose of the Proposed Project

The purpose of the proposed project is to provide a transportation facility and seawall with improved earthquake resistance that maintain or improve mobility and accessibility for people and goods along the existing AWV Corridor.

1.1.2 Reason the Project Is Needed

This Alaskan Way Viaduct and Seawall Replacement Project is needed because the Alaskan Way Viaduct and Alaskan Way Seawall are both at the end of their useful life. Improvements to both are required to protect public safety and maintain this vital transportation corridor. Because these facilities are at risk of sudden and catastrophic failure in an earthquake, the Federal Highway Administration (FHWA), Washington State Department of Transportation (WSDOT), and the City of Seattle (City) seek to implement these improvements as quickly as possible.

1.2 Project Boundaries

This project proposes to replace both the Alaskan Way Viaduct and the Alaskan Way Seawall. The project boundaries generally follow the SR 99 alignment from approximately S. Spokane Street on the south to Ward Street north of the Battery Street Tunnel (BST). The project includes constructing replacement structures for both the Alaskan Way Viaduct and Alaskan Way Seawall.

For discussion purposes, the project has been broken into the following sections:

- South – S. Spokane Street to S. King Street
- Central – S. King Street up to the Battery Street Tunnel
- North Waterfront – Alaskan Way surface street from Pike Street up to Myrtle Edwards Park (near Broad Street)
- North – Battery Street Tunnel, north to approximately Ward Street
- Seawall – S. Washington Street up to Myrtle Edwards Park (near Broad Street)

1.3 Existing Conditions

1.3.1 Existing Conditions of the Alaskan Way Viaduct

The Alaskan Way Viaduct, together with the BST, is the major traffic corridor along the Seattle waterfront. The AWV Corridor carries approximately 20 percent of Seattle's north–south traffic through downtown. The viaduct structure is a four- to seven-lane facility, approximately 11,000 feet long. Most of the viaduct roadway carries two to four lanes with varying roadway widths and minimal shoulders. The BST is an additional 2,200 feet in length and provides two lanes in each direction.

The viaduct was constructed in the 1950s and conformed to the design standards of that time. The viaduct is primarily a reinforced concrete single- level or double-level structure (depending on location) supported on square or rectangular columns connected by reinforced concrete beams. There are other isolated types of structures, such as single-level structures with steel girders or pre-cast concrete girders, included in the mainline structure and ramps.

During the Nisqually earthquake on February 28, 2001, localized portions of the viaduct suffered substantial damage. This damage caused the viaduct to be closed numerous times for emergency repairs.

For assessment of the needs for the continued use, maintenance, and repair of the viaduct structure and the BST, the following existing conditions were evaluated:

- Operational deficiencies
- Maintenance and repair for current level of operations
- Seismic vulnerabilities
- Battery Street Tunnel vulnerabilities

The evaluation was conducted with a visual inspection of the facilities, review of the as-built plans, and an analysis of existing traffic and operational conditions. A compilation and assessment of the operational, seismic, and life safety vulnerabilities followed (WSDOT 2002b).

Operational Deficiencies

There are numerous operational safety issues that do not meet current WSDOT design standards. These deficiencies occur on SR 99's main roadway, on the on- and off-ramps, and in the BST.

Operational deficiencies on the mainline include the following non-standard elements:

- Lane widths
- Turning roadway widths
- Shoulder widths
- Stopping sight distance
- Vertical curve stopping sight distance
- Guard rails
- Lane tapers

The ramp deficiencies include the following:

- Lane widths
- Turning roadway widths
- Gore radius lengths
- Acceleration/deceleration lengths
- Shoulder widths
- Lane tapers

The BST deficiencies include the following:

- Lane widths
- Lack of shoulders
- Insufficient merge lengths and/or auxiliary lanes to accommodate entering traffic streams from ramps
- Constriction of SR 99 from three lanes to two

Viaduct Vulnerabilities

The existing viaduct is at substantial seismic risk of partial failure or total collapse if a moderate to large earthquake occurs. The structures that make up the viaduct were not built to meet current seismic standards. As a

continuing precaution, WSDOT has instituted a program that continues to monitor the structural cracks and deterioration of the facility.

The Nisqually earthquake had moderate ground accelerations and a relatively short duration. The damage due to this earthquake was substantial in localized areas and required the viaduct to be closed several times during 2001 so that emergency repairs could be made.

An earthquake similar in size and intensity to the Nisqually earthquake but with a slightly longer duration would likely cause major damage to, or the collapse of, the viaduct. This could result in major traffic disruptions, potential loss of life, and loss of major services, including smaller freight movements that run along the viaduct and within the AWV Corridor. Electrical power for a large part of the downtown Seattle area would be at risk in such an event due to either major damage or collapse of the viaduct or significant soils settlement likely under the paved streets where the utility lines are laid. Seattle City Light uses a combination of transmission and distribution utility lines running along and under the viaduct structure.

The existing viaduct could experience the following types of failure from seismic events:

- Liquefaction of the soils behind the Alaskan Way Seawall could cause massive slope instability leading to ultimate collapse of the seawall, the Alaskan Way surface street, the viaduct, or other waterfront structures. In turn, disruption to major waterfront utilities would occur.
- Liquefaction of the soils adjacent to the viaduct foundations could cause collapse of the structure.
- Brittle cracking in the viaduct columns and beams could cause catastrophic damage in the structure and lead to collapse.
- Lateral cracking of the viaduct frames could lead to progressive failure and ultimate collapse.

In the 1950s, the viaduct structure was designed to have a service life of 60 to 75 years. By the time the viaduct replacement is ready for construction and the existing viaduct torn down, it will be close to 60 years old, and the viaduct structure will have realized its design life span at the completion of construction. In addition, the structure has sustained substantial damage from past seismic events, fires, and other causes that have led to accelerated deterioration and corrosion

Battery Street Tunnel Vulnerabilities

Although the seismic vulnerabilities of the BST are still being studied, the BST was generally found to be in good structural condition based upon a series of

inspections done by WSDOT subsequent to the Nisqually earthquake. These findings can be found in the *Interim In-Depth Inspection and Recommendations* (WSDOT 2002b). Some localized areas of distress and damage were observed and are recommended for repair. A detailed seismic analysis of the BST is being undertaken so that the tunnel's overall performance under current seismic design standards can be assessed. (The seismic analysis report is expected in Spring 2004.).

An in-depth mechanical and electrical inspection was conducted for the BST. The inspection concluded that the mechanical and electrical systems do not meet current standards for fire protection and life safety. Much of the equipment is original to the 1950s installation and is nearing the end of the expected service life. Replacement parts are increasingly difficult to obtain for the aging equipment. Corrosion and wear have further reduced the reliability of this equipment for public safety.

Mechanical vulnerabilities include inadequate tunnel ventilation and fire detection systems. In addition, emergency exits and fire cabinets are in poor condition and do not operate satisfactorily.

The vulnerabilities of the BST's mechanical and electrical systems increase the risk of failures and loss of life in a fire or other life safety event. These issues present a challenge for planned future repairs and upgrades.

1.3.2 Existing Conditions of the Alaskan Way Surface Street

In the south, the surface street that runs parallel and to the west of SR 99 is known as E. Marginal Way. E. Marginal Way extends from S. Spokane Street to S. Holgate Street, where its name changes to Alaskan Way. Alaskan Way extends northward from S. Holgate Street along the waterfront to Broad Street. For the purposes of this document, reference to Alaskan Way surface street identifies the surface street from S. Spokane Street to Broad Street.

Alaskan Way surface street is an arterial that connects the south Seattle industrial area to Interbay, Magnolia, and Ballard businesses and communities, as well as servicing the waterfront businesses and marine terminals between S. Holgate Street and Broad Street.

<u>S. Spokane Street to S. Royal Brougham Way</u> – the existing surface street is at-grade and lies between the Whatcom Rail Yard and Port of Seattle Terminal 25 to Pier 37. The existing street configuration has one lane in each direction plus a center turn lane and a bike path lane.

<u>S. Royal Brougham Way to Yesler Way</u> – the existing surface street is at-grade and lies to the west of the existing Alaskan Way Viaduct and east of Pier 37 to Pier 52. The existing street configuration has two lanes in each direction plus parking on both sides of the street. One of the two northbound lanes is

dedicated to the Colman Dock Ferry Terminal access and ferry holding area and is not a through lane.

Yesler Way to Madison Street – the surface street predominantly lies above the existing seawall that is to be rebuilt. The existing street configuration has two southbound lanes with metered parking and one northbound lane without parking. The vulnerabilities of the surface street are directly correlated to the vulnerabilities of the seawall as discussed in the next section (Section 1.3.3).

Madison Street to Pike Street – the surface street predominantly lies above the existing seawall that is to be rebuilt. The existing street configuration has two southbound lanes with metered parking and two northbound lanes without parking.

Pike Street to Broad Street – the surface street predominantly lies above the existing seawall that is to be rebuilt. The existing street configuration has two southbound lanes with parking and two northbound lanes with parking (Exhibit 1-1).

Exhibit 1-1. Existing Alaskan Way Traffic Lanes and Parking

Sections of Alaskan Way	Existing Alaskan Way Traffic Lanes and Parking								
	Parking	SB[a]	SB	Turn Lane	Ferry Holding Lane	NB[b] Thru Lane	NB Thru Lane	Parking	Bike Path
S. Spokane Street to RBW[c]	--	--	Yes	Yes	--	Yes	--	--	Yes
RBW to Yesler Way	Yes	Yes	Yes	--	Yes	--	Yes	Yes	--
Yesler Way to Madison Street	Yes	Yes	Yes	--	--	--	Yes	--	--
Madison Street to Pike Street	Yes	Yes	Yes	--	--	Yes	Yes	--	--
Pike Street to Broad Street	Yes	Yes	Yes	--	--	Yes	Yes	Yes	--

[a] SB = Southbound
[b] NB = Northbound
[c] RBW = S. Royal Brougham Way

Streetcar – The existing streetcar tracks are located to the east of the Alaskan Way surface street between Main Street and Broad Street.

BNSF Railroad Mainline Tracks – Between Bell Street and Broad Street, the two mainline tracks parallel the streetcar tracks and Alaskan Way. At Bell Street, the Burlington Northern Santa Fe (BNSF) tracks angle east behind existing buildings and enter the existing BNSF Tunnel near Pike Street.

Waterfront Trail – The Waterfront Trail is an asphalt-paved path that runs along the east side of Alaskan Way from about Lenora Street south to Yesler Way.

1.3.3 Existing Conditions of the Alaskan Way Seawall

The Alaskan Way Seawall extends from S. Washington Street up to Myrtle Edwards Park (just north of Broad Street). The seawall is made of three main structure types. These structure types and their locations are described below and shown in Exhibits 1-2 and 1-3. They include:

- Pile-Supported Gravity Seawall (also includes Pile-Supported Frame) – Located from S. Washington Street up to Madison Street.
- Type B Seawall – Located from about Madison Street up to Union Street and a small section at Clay Street.
- Type A Seawall – Located from Union Street north to Myrtle Edwards Park.

In addition, there is a small section of seawall south of S. Washington Street located between S. King Street and S. Washington Street. In this area, the seawall is made up of a steel sheet pile wall. This section of seawall is in need of repair and is proposed for replacement as part of this project.

Significant portions of the seawall are vulnerable in an earthquake. In addition, part of the seawall structure, known as the timber relieving platform, was constructed with untreated timber and is buried in fill beneath the Alaskan Way surface street. The relieving platform supports both the seawall and the Alaskan Way surface street. Significant portions of the relieving platform are damaged, requiring major repairs (see Exhibit 1-3).

In a moderate earthquake, it is likely that some movement of the seawall would occur, and wall failures are possible. With any damage to the seawall, the Alaskan Way surface street, particularly the lanes closest to the water, would likely be unusable until the damage could be repaired. It is likely that utilities along the roadway and underneath the surface would be damaged, causing power and water line breaks and distribution disruptions.

A major earthquake could cause catastrophic failure of major portions of the seawall. Liquefaction and resulting lateral spreading is likely. Major utility and traffic disruption could occur. Buildings and structures along the waterfront also could partially or completely collapse, along with major utility outages.

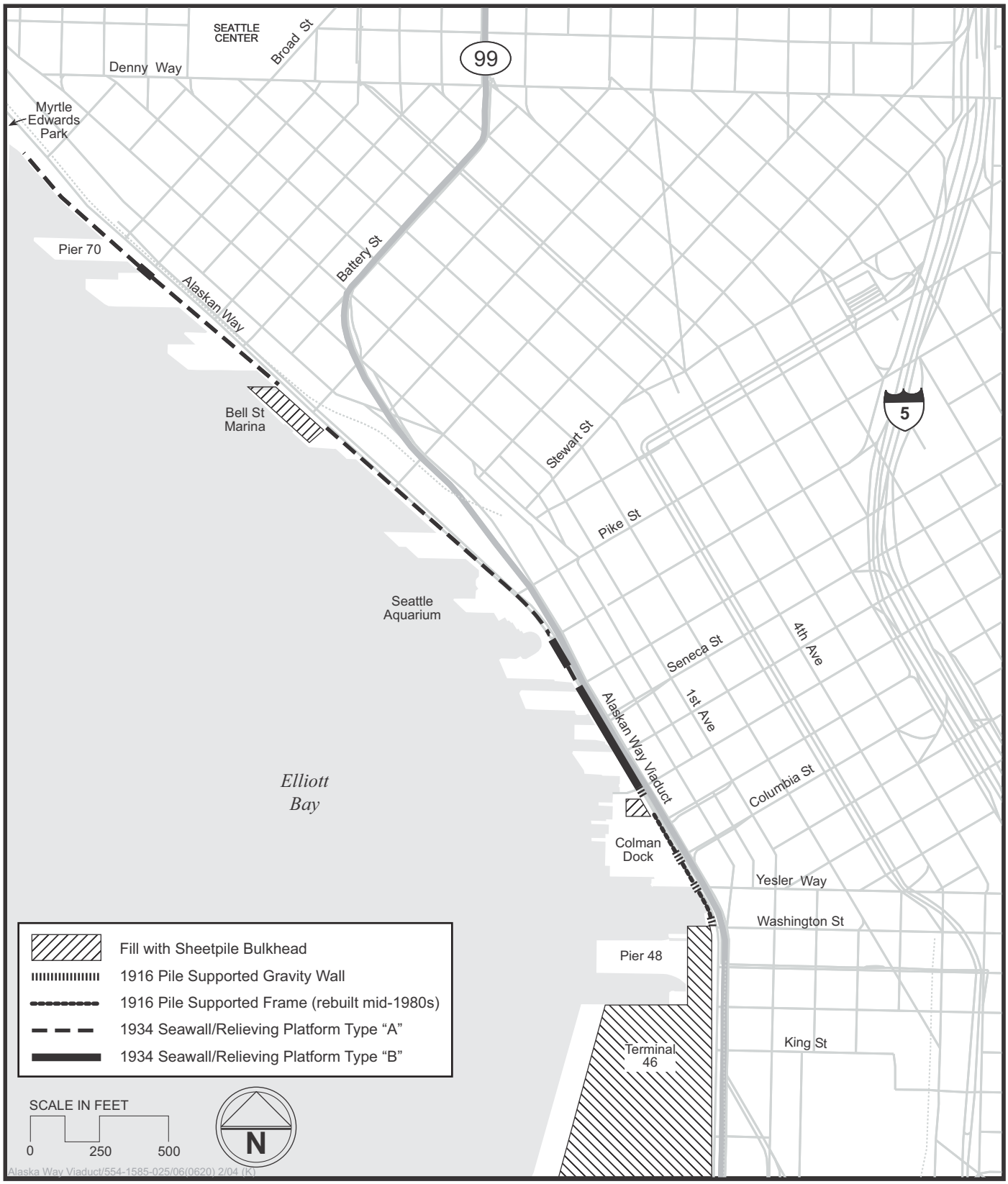

Exhibit 1-2
Project Vicinity Map Showing Locations of Various Seawall Types

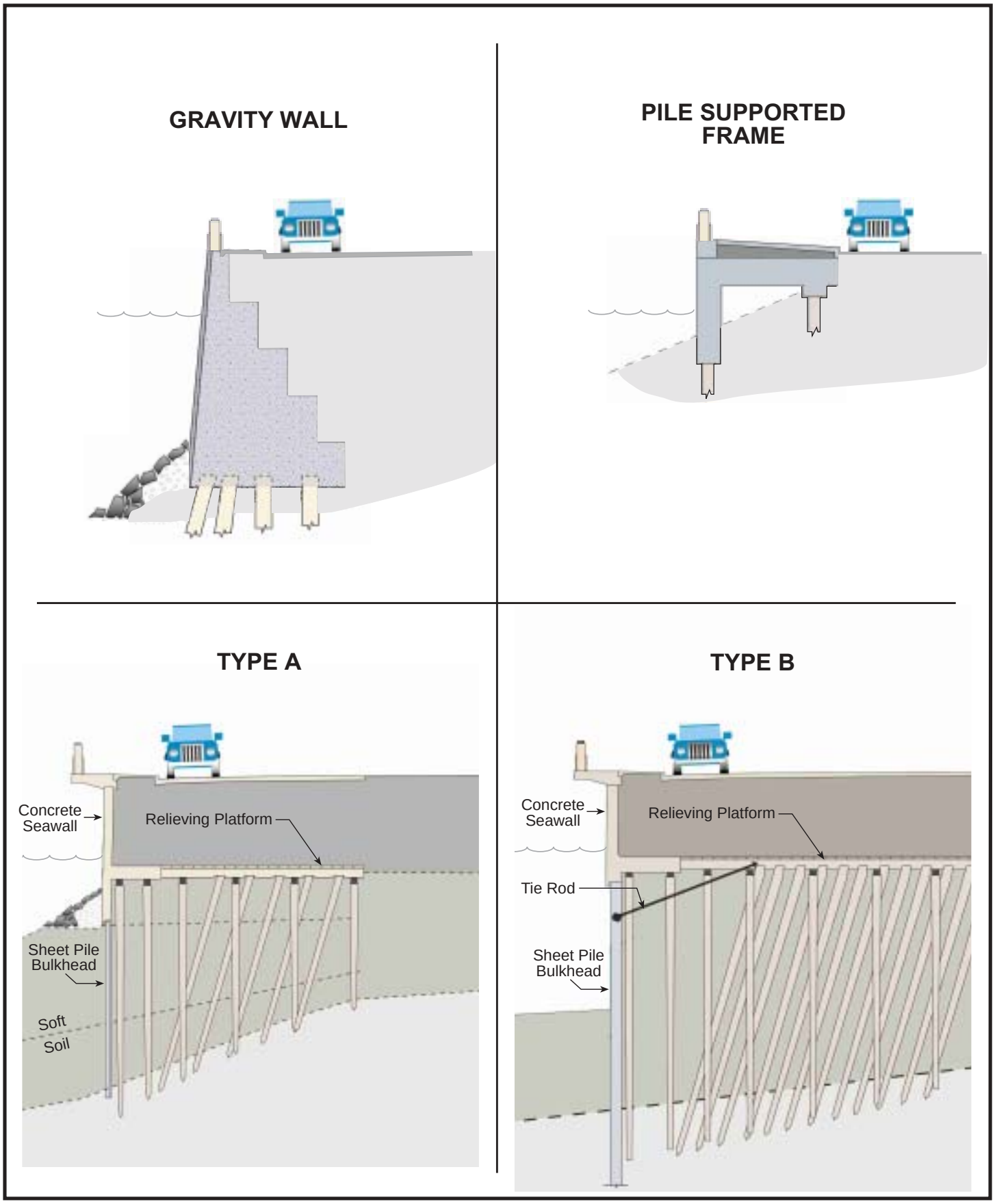

Source: Berger/Abam Engineers, Inc.

Exhibit 1-3
Cross-Sections of Various Alaskan Way Seawall Types

Pile-Supported Gravity Seawall and Pile-Supported Frame

The Pile-Supported Gravity Seawall and the Pile-Supported Frame are located between S. Washington and Madison Streets. The Pile-Supported Gravity Seawall is made of unreinforced concrete supported by timber piles. The concrete is about 12 feet thick at the base and narrows at the top. Riprap has been placed on the waterside of the concrete.

The Pile-Supported Frame supports sections of sidewalk and is built of reinforced concrete supported by either pre-stressed concrete piles or steel taper piles, depending on location.

Type B Seawall

The Type B Seawall is located between Madison and Union Streets. There is also a small section of Type B Seawall further north at Clay Street. The Type B Seawall is constructed in areas of greater depths, while the Type A Seawall, which is generally enclosed by either soil or riprap, is more suitable for shallower depths. The waterside face of the Type B Seawall is a steel sheet pile wall on the bottom with a concrete face attached to the top. The steel sheet pile wall is exposed to the marine waters of Elliott Bay. The sheet pile wall and concrete face are held up by an untreated timber relieving platform and wood piles. The relieving platform extends approximately 60 feet east of the sheet pile wall and is located about 13 feet under the existing Alaskan Way surface street. The relieving platform holds up the seawall face and also supports the Alaskan Way surface street and utilities located in the backfill over the relieving platform.

Because the Type B Seawall is vulnerable to corrosion effects, the Type B Seawall portions required repairs, which were performed by the City in the mid-1980s. Besides corrosion effects, settlement of soils in the seawall area can also cause settlement under Alaskan Way. Both metals corrosion and soil movements in the less solid soils cause voids to form under the seawall face due to larger tidal ebbs and flows, as well as during major storm events.

Type A Seawall

The Type A Seawall extends from approximately Union Street north to Bay Street, terminating in Myrtle Edwards Park. It is interrupted at Clay Street with a short section of Type B Seawall. In addition, a bulkhead and fill has been built in front of the seawall in a small section at Pier 66 between Blanchard and Battery Streets.

Type A Seawall is similar to the Type B Seawall. The primary difference is that the waterside face of the Type A Seawall is not exposed to the marine waters because it is enclosed by either soil or riprap. In addition, the relieving

platform for the Type A Seawall extends up to 40 feet east of the seawall (instead of 60 feet with the Type B Seawall).

1.4 Alternatives and Options Overview

There are five alternatives proposed in addition to the No Build Alternative. The five alternatives all include building replacement structures for both the Alaskan Way Viaduct and the Alaskan Way Seawall. Each alternative is named according to the type of roadway proposed through the central section. The five alternatives are Rebuild, Aerial, Tunnel, Bypass Tunnel, and Surface.

Within the five proposed Build Alternatives,[1] there are several possible options. The options are intended to provide some choices that can be mixed and matched with the proposed alternatives. Desirable options in the north and south ends of the project corridor have been packaged with the five Build Alternatives for evaluation in the Draft EIS. Other combinations of alternatives and options may be feasible; however, not all of the options can be mixed and matched for engineering reasons.

Exhibit 1-4 shows the five Build Alternatives and the proposed options. The options are shown in smaller boxes below the alternative they are associated with.

1.4.1 Rebuild Alternative

The Rebuild Alternative includes replacing the existing viaduct and seawall with the following components:

- South – Replace the viaduct with SR 99 at-grade and SR 519 ramps elevated.
- Central – Rebuild and retrofit the viaduct; retrofit existing ramps at Seneca, Columbia, Elliott, and Western.
- North Waterfront – Reconstruct the Alaskan Way surface street.
- North – No work is proposed in the north section of the project area.
- Seawall – Rebuild the seawall from S. Washington Street up to Myrtle Edwards Park.

[1] The Build Alternatives are defined as the five proposed viaduct and seawall replacement alternatives and do not include the No Build Alternative.

Alaskan Way Viaduct and Seawall Replacement Project

ALTERNATIVES AND OPTIONS CHART

At-Grade | Aerial | Tunnel | Seawall

	SOUTH S. Spokane - S. King	CENTRAL S. King - Battery St. Tunnel	N. WATERFRONT Pike - Broad	NORTH Battery St. Tunnel - Ward	Seawall S. King - Myrtle Edwards Park Seawall at Pier 66 /Cruise Ship Terminal not included
Rebuild	**At-Grade** SR 519 elevated	**Rebuild** Retrofit approaching Battery St. Tunnel	**Surface Street Improvements**	**No Improvements**	**Rebuild**
Aerial	**Stacked Aerial** SR 519 at-grade Or	**Stacked Aerial** Side-by-side Aerial approaching Battery St. Tunnel	**Surface Street Improvements**	**Widened Mercer Underpass** Or	**Rebuild** Or
Options	***At-Grade*** *SR 519 elevated*			***Lowered Aurora/SR 99*** *with overpasses connecting 5 streets*	***Frame***
Tunnel	**At-Grade** SR 519 elevated Or	**Tunnel - 6 Lanes** Side-by-side Aerial approaching Battery St. Tunnel	**Surface Street Improvements**	**Widened Mercer Underpass**	**Tunnel Wall and Rebuild** Seawall north and south of tunnel
Options	***Side-By-Side Aerial*** *SR 519 at-grade*	***Ramps to Elliott/Western*** *for Ballard /Interbay connection*			
Bypass Tunnel	**At-Grade** SR 519 elevated	**Bypass Tunnel - 4 Lanes** Side-by-side Aerial approaching Battery St. Tunnel	**Surface Street Improvements**	**Widened Mercer Underpass**	**Tunnel Wall and Rebuild** Seawall north and south of tunnel
Options		***Roadway to Elliott/Western*** *for Ballard /Interbay connection*			
Surface	**At-Grade** SR 519 elevated Or	**At-Grade** Side-by-side Aerial approaching Battery St. Tunnel	**Surface Street Improvements**	**Widened Mercer Underpass** Or	**Rebuild**
Options	***At-Grade*** *SR 519 at-grade*			***Existing Aurora/SR 99*** *with signals at Roy, Republican and Harrison*	

Exhibit 1-4

1.4.2 Aerial Alternative and Options

The Aerial Alternative includes replacing the existing viaduct and seawall with the following components:

- South – Replace the viaduct with a stacked aerial structure and SR 519 ramps at grade.
- Central – Replace the viaduct with a new stacked aerial structure, with new ramps at Columbia, Seneca, Western, and Elliott.
- North Waterfront – Reconstruct the Alaskan Way surface street with four lanes; use the Broad Street Detour during construction.
- North – Construct the Battery Street Tunnel Improvements; construct the Widened Mercer Underpass by expanding Mercer Street to seven lanes.
- Seawall – Rebuild the seawall.

The Aerial Alternative includes the following options:

- South – Replace the viaduct with SR 99 at grade and SR 519 ramps elevated.
- Central – No options proposed.
- North Waterfront – Use the Battery Street Flyover Detour (a temporary aerial structure above the buildings along the east side of Alaskan Way and over the BNSF tracks, connecting the BST with the Alaskan Way surface street) during construction.
- North – Lower Aurora/SR 99 with underpasses at Mercer, Roy, Thomas, Harrison, and Republican Streets.
- Seawall – Replace the seawall with the Frame option.

1.4.3 Tunnel Alternative and Options

The Tunnel Alternative includes replacing the existing viaduct and seawall with the following components:

- South – Replace the viaduct with SR 99 at grade and SR 519 ramps elevated.
- Central – Replace the viaduct with a tunnel; construct the connection to the BST without ramps.
- North Waterfront – Reconstruct the Alaskan Way surface street; use the Broad Street Detour during construction.
- North – Construct the Battery Street Tunnel Improvements and the Widened Mercer Underpass.

- Seawall – Replace the seawall with the outer wall of the tunnel. In areas where there is no tunnel, rebuild the seawall.

In addition, there are several possible options for the Tunnel Alternative. Those options include:

- South – Replace the viaduct with a side-by-side aerial structure.
- Central – Construct the aerial connection to the BST with ramps to Elliott and Western Avenues.
- North Waterfront – Use the Battery Street Flyover Detour during construction.
- North – No options proposed.
- Seawall – No options proposed.

1.4.4 Bypass Tunnel Alternative and Options

The Bypass Tunnel Alternative includes replacing the existing viaduct and seawall with the following components:

- South – Replace the viaduct with SR 99 at-grade and SR 519 ramps elevated.
- Central – Replace the viaduct with a bypass tunnel; construct the connection to the BST without ramps to Elliott and Western Avenues.
- North Waterfront – Reconstruct the Alaskan Way surface street; use the Broad Street Detour during construction.
- North – Construct the Battery Street Tunnel Improvements and the Widened Mercer Underpass.
- Seawall – Replace the seawall with the outer wall of the tunnel. In areas where there is no tunnel, rebuild the seawall.

The Bypass Tunnel Alternative includes several possible options:

- South – No options proposed.
- Central – Construct the connection to the BST with ramps to Elliott and Western Avenues.
- North Waterfront – Use the Battery Street Flyover Detour during construction.
- North – No options proposed.
- Seawall – No options proposed.

1.4.5 Surface Alternative and Options

The Surface Alternative includes replacing the existing viaduct and seawall with the following components:

- South – Replace the viaduct with SR 99 at-grade and SR 519 ramps elevated.
- Central – Replace the viaduct with a surface street with signals; construct the connection to the BST with ramps.
- North Waterfront – Reconstruct the Alaskan Way surface street; use the Broad Street Detour during construction.
- North – Construct the Battery Street Tunnel Improvements and construct the Widened Mercer Underpass.
- Seawall – Rebuild the seawall.

The Surface Alternative includes several possible options:

- South – Replace the viaduct with SR 99 at-grade and SR 519 at-grade.
- Central – No options proposed.
- North Waterfront – No options proposed.
- North – Existing SR 99 with added signals.
- Seawall – No options proposed.

1.5 Construction Methods, Durations, and Sequencing

Chapters 3 and 4 of this memorandum will describe the construction methods and approaches anticipated for each of the alternatives and their associated options.

Exhibit 1-5 shows the estimated construction durations for each alternative. These estimated construction durations do not include the 18-month duration estimated for preliminary Stage 1 construction activities, as described in more detail in Chapter 4, Construction Sequencing. The preliminary utility relocation (18-month duration) is currently scheduled to begin in mid-2006.

Exhibit 1-5. Estimated Construction Durations for Each Alternative

Alternative	Construction Duration
Rebuild Alternative	7.5 years
Aerial Alternative	11 years
Tunnel Alternative	9 years
Bypass Tunnel Alternative	8.5 years
Surface Alternative	8 years

Note also that these durations are estimates and have been developed only for the proposed alternatives represented in the Alternatives and Options Chart shown in Exhibit 1-4. These estimates are based on possible ranges of construction durations based on overall risk. The process used to estimate project costs and durations for this project is called the Cost Estimate Validation Process (also known as the CEVP). The construction durations used in this report represent the 90th percentile of durations calculated through the CEVP. This means that 90 percent of the time a construction activity would take the same or less time as what is estimated. These estimates will be refined once a preferred alternative is selected and additional information is known regarding project design and funding.

Chapter 2 ALTERNATIVES AND OPTIONS

This chapter describes the alternatives that will be evaluated in the Draft EIS, including the No Build Alternative (often called the No Action Alternative), elements common to all Build Alternatives,[2] and the five Build Alternatives with their proposed options. The five Build Alternatives and options are described from south to north.

2.1 No Build Alternative

Three scenarios are evaluated as part of the No Build Alternative. These scenarios include:

- Scenario 1 – Continued operation of the viaduct and seawall with continued maintenance.
- Scenario 2 – Sudden unplanned loss of the viaduct and/or seawall but without major collapse or injury.
- Scenario 3 – Catastrophic failure and collapse of the viaduct and/or seawall.

2.1.1 Scenario 1 – Continued Operation of the Viaduct and Seawall With Continued Maintenance

Under Scenario 1, the viaduct and seawall would continue to operate, and maintenance would occur as needed. The current roadway restrictions imposed on the viaduct, including speed reductions and lane restrictions for large vehicles, would remain in place. Additional roadway restrictions would be put in place, when needed, as the viaduct and seawall age. Viaduct and seawall repairs would be made as necessary to keep the facilities open; however, at some point in the future, likely before 2030, the facilities would be replaced. The costs of maintaining the existing viaduct will escalate higher and higher as the structure nears the end of its useful life.

Viaduct Vulnerabilities

As would be expected in a 50-year-old structure located adjacent to the waterfront, the viaduct has experienced corrosion damage in addition to normal wear and tear. Viaduct components that are susceptible to performance failure were either constructed as part of the facility or were made vulnerable by later events such as material spills, fires, and earthquakes.

[2] Build Alternatives are defined as the five proposed viaduct and seawall replacement alternatives and do not include the No Build Alternative.

The corrosion of the viaduct is partly a result of many construction elements that were built into the facility, and later found to be vulnerable to chloride or sulfate attack. Some of these components include minimal concrete cover over the reinforcing steel in the deck and columns, the type of cement used in the concrete mix, inadequate consolidation of the concrete during the placement of the concrete, larger crack size allowances in the original design than would be allowed now, and uncoated reinforcing steel.

Documented events that contributed to the deterioration of the facility include a material spill near Elliott Avenue that degraded the concrete deck cover; a number of earthquakes of various magnitudes, each of which likely caused small, incremental amounts of cracking; and fires both on and under the structure that damaged the concrete supporting elements.

The continued deterioration of the structure increases its vulnerability to seismic events and limits the capacity of the structure to support current traffic operational loads. Repairs and maintenance to be completed by 2004 include epoxy injection into cracks in the main load-carrying beam, a new deck overlay, isolated column concrete repair, and removal and replacement of damaged concrete in the overhead beams. It is anticipated that additional deficiencies will be discovered during the repair process and will need to be addressed.

In view of the structural deficiencies of the facility, WSDOT has imposed load restrictions on traffic using the viaduct. Buses and trucks with a total weight limit of 105,500 pounds are restricted to travel in the right lane only in each direction. Further load restrictions are likely as continuing structural deficiencies are found.

The repairs would slow the degradation of portions of the facility, but would not return the structure to its original structural capacity. Extensive rehabilitation and retrofit or replacement of the existing viaduct would be needed at a future date.

Seawall Vulnerabilities

The existing Alaskan Way Seawall has a number of vulnerabilities. Significant portions of the seawall are vulnerable in an earthquake. A critical element of the Type A and Type B Seawall structures, the timber relieving platform, was constructed with untreated timber and is buried in fill beneath Alaskan Way. Significant portions of the relieving platform are damaged, requiring major repairs to the platform. In some places, the platform is severed from the wall, leaving these wall portions vulnerable to failure. Gribbles and other marine-boring organisms (marine worms that bore into timber) cause continual degradation of both timber piles and the timber relieving platform. Where the wall itself is damaged, fill materials have, in

some cases, moved through the wall, leaving voids. Major storm events and high tidal actions cause continual enlargement of the voids underneath the face walls.

While portions of the viaduct could be retrofitted to restore structural stability, the seawall's structures require reconstruction as opposed to repair. It is difficult to determine the period of time that the seawall will continue to function with the repair of portions of the face wall, such as the recent (summer 2003) cement grout repairs of the section near Pier 59 where the Seattle Aquarium is located, near Pike Street.

2.1.2 Scenario 2 – Sudden Unplanned Loss of the Viaduct and/or Seawall Without Major Collapse or Injury

Under Scenario 2, the viaduct and/or seawall would be out of service for an unknown period of time, but would be repairable. An event such as a moderate earthquake like the Nisqually could cause sudden unplanned loss of the viaduct and/or seawall. It is assumed that the damaged area of the viaduct and/or seawall could be repaired, with eventual replacement of the facilities.

A moderate earthquake slightly larger than or of a duration a few seconds longer than the Nisqually earthquake is likely to initiate more widespread liquefaction and increased loads on the existing seawall. The Nisqually quake in 2001 is believed to have caused settlement of the street in the vicinity of the Seattle Aquarium, where marine borer activity has caused extensive damage to the relieving platform that supports the seawall. Some liquefaction of the soils retained behind the seawall is also believed to have occurred. Some grouting repairs to cracks in the seawall were made by the City of Seattle in summer 2003.

Total failure of either the Type A or Type B Seawalls north of Madison Street under the expected earthquake is possible at some locations but not likely at most locations (BERGER/ABAM Engineers 2002).

It is very difficult to assess the consequence of the movements and possible isolated wall failures described above. Some utilities would be damaged, and the Alaskan Way surface street, particularly the lanes closest to the water, may be unusable until the damage could be repaired. Discernible vertical settlements and lateral or horizontal soil movements are likely to be confined to the width of the Alaskan Way surface street. Type A and Type B Seawall structures would probably fail in some locations, requiring replacement and/or reconstruction necessary at substantial cost and disruption to waterfront activities. This reconstruction could take years.

Damage to sewer pipes and other underground utilities will occur with differential settlements (i.e., undulations of the roadway surface). Services to pier structures founded on piling could be interrupted or severed if the seawall drops several inches relative to the piers. Damage is also more likely for utilities constructed of more brittle materials such as concrete and cast iron.

2.1.3 Scenario 3 – Catastrophic Failure and Collapse of the Viaduct and/or Seawall

Scenario 3 of the No Build Alternative evaluates the impacts of catastrophic failure and collapse of the viaduct and/or seawall. A catastrophic seismic event could trigger failure of significant portions of the seawall and/or viaduct. The seismic event that would cause the soils to liquefy would also cause lateral ground movements leading to large earth movements behind the seawall, triggering the possible collapse of the seawall itself and the Alaskan Way Viaduct. These events would likely cause damage to or the collapse of piers and buildings near the seawall due to shifting movements of the liquefiable soils that extend as far east as Western Avenue. These movements will disrupt utilities, including electric power, water, sanitary and storm sewer, natural gas, oil, steam, and fiber optics.

2.2 Elements Common to All Build Alternatives

The Build Alternatives have several elements in common: (1) the Flexible Transportation Package, (2) utilities relocations, (3) provision of an access road to Colman Dock Ferry Terminal, and (4) no seawall construction planned at Pier 66 from Blanchard Street to Battery Street. These elements are described in greater detail below.

2.2.1 Flexible Transportation Package

The Flexible Transportation Package is an organizing set of programs that bring together synergistic transportation strategies that benefit from being considered and implemented in a coordinated fashion.

All of the proposed alternatives include a flexible transportation improvements package, offering a menu of strategies to achieve the following objectives:

- Provide alternatives to single-occupancy vehicle (SOV) trips.
- Provide incentives to reduce auto trips by encouraging non-SOV modes.

- Manage traffic to avoid congestion and delay, especially during construction and special events.
- Serve specific targeted markets within the AWV Corridor.

The flexible transportation improvements package will include options such as:

- Direct transit enhancements
- Improved bicycle and pedestrian facilities
- Construction mitigation programs
- Transit priority measures
- Trip reduction strategies

The strategies defined in this package help to achieve State and City goals and objectives through a mix of traditional programs and innovative strategies designed to serve markets previously not served. The strategies defined in the package are typically categorized as transportation system management (TSM), transportation demand management (TDM), intelligent transportation systems (ITS), transit services, and pedestrian and bicycle improvements.

These strategies place special emphasis on improving mobility for commuters and general traffic, particularly during the construction period. As envisioned, the Flexible Transportation Package strategies defined for each Build Alternative will be coordinated with all transportation service providers that operate in downtown.

A complete description of the Flexible Transportation Package work is detailed in WSDOT's report, *Draft Flexible Transportation Package, An Integrated Program of Demand and System Management Strategies* (WSDOT 2002a).

For a detailed description of each Flexible Transportation Package strategy proposed for implementation during AWV construction, see Section 3.1.8. The emphasis of these strategies is to help mitigate traffic congestion during construction. Further work during the development of the preferred alternative will be required to better define the role and function of these strategies. Implementation of these strategies beyond the construction period is still under discussion among the lead agencies, and their applicability for the post-construction period could change.

Included as a Long-Term Strategy (Operational to 2030)

The following strategies would continue in operation beyond the construction period and are funded by the project.

NOTE: Final resolution of long-term funding of these strategies is pending, and discussion continues among the lead agencies on this topic.

- Expand Vanpool/VanShare Program (all alternatives)
- Personalized transportation consultation (all alternatives)
- Incident management systems (all alternatives)
- Direct transit enhancements, including possible water taxi service (all alternatives)
- Flexible Transportation Program Management and Monitoring/Demonstration and Research Programs

Note: Conversion of Long-term Downtown Parking to Short-term, Parking Lot Guidance Systems and Event Management System strategies are under consideration as long-term strategies, though final decisions by lead agencies are pending.

2.2.2 Utilities Relocations

An extensive network of utilities is located in the AWV Corridor. The utilities found in the project area include:

- Electrical transmission and distribution lines suspended from and buried under the viaduct.
- Water mains, fire hydrants, cathodic protection systems, fire flow vaults, and other water main appurtenances.
- Sanitary sewer collection pipes and outfalls.
- Storm drain catch basins, collection pipes, stormwater only outfalls, stormwater diversion structures and regulators, and combined sewer overflows (CSOs).
- Telecommunications (including phone lines, cable lines, and fiber optics).
- Steam, natural gas, and oil/petroleum distribution lines.

All of the alternatives have been designed to accommodate the utilities currently located in the AWV Corridor. However, utility locations may change compared to existing conditions. Under all of the Build Alternatives, some utilities will be temporarily relocated for construction and moved again to their final locations. Coordination with utilities agencies will be ongoing before and during the construction period. Although coordination will aim to minimize the frequency of utility relocations, this work will continue throughout construction until project completion. The locations for the temporary and permanent utility relocations vary between the alternatives, but all of the utilities are anticipated to remain in the existing AWV Corridor once construction is completed.

2.2.3 Colman Dock Ferry Terminal Access Road and Relocation of Washington Street Boat Landing

The Alaskan Way Viaduct and Seawall Replacement Project includes the construction of an over-water pier between S. King Street and Yesler Way. A parallel service road called the Colman Dock Ferry Terminal Access Road will be built on the pier. The roadway is needed for all alternatives during construction to maintain access/egress for ferry operations and to accommodate construction staging activities from the Pier 48 uplands. Once AWV construction is completed, this over-water pier may or may not continue to operate as a ferry terminal access roadway. If it continues to operate as a ferry access roadway, it may be used to connect to off-site ferry holding. It would also help to improve traffic operations on Alaskan Way by separating ferry traffic on Alaskan Way. If it does not continue to operate as a separated ferry access roadway, the pier could provide shoreline access and viewing and pedestrian and/or bicycle access to the historic Washington Street Boat Landing. See Appendix X, Exhibit R-15 for the over-water roadway connecting from Pier 48 to Colman Dock, and the potential location for the relocated Washington Street Boat Landing.

This access road requires that an over-water structure be built to support the roadway and to facilitate the relocation of the historic Washington Street Boat Landing from its current location at the toe of S. Washington Street further west to the northwest edge of Pier 48. Pedestrian access to the Washington Street Boat Landing will be provided.

The proposed Colman Dock Ferry Terminal Access Road will not preclude the Washington State Ferries' planned expansion of the Colman Dock Ferry Terminal. The proposed Colman Dock Ferry Terminal Access Road will accommodate a wide range of potential ferry expansion plans and will not rely on any of these plans to be constructed prior to viaduct and seawall construction. The proposed access road could accommodate the existing 650-car capacity Colman Dock, an expanded 1,000-car Colman Dock, or a 1,200-car Colman Dock. The access road will also allow a connection to several proposed off-site ferry holding areas under various alternatives, including those proposed under the viaduct, east of SR 99, or on Terminal 46. See Appendix C, Transportation Discipline Report for details on surface street movements to accommodate ferry terminal operations access and egress.

It is expected that the access road will be constructed as part of the preliminary site preparation activities, prior to any major viaduct and seawall construction (anticipated for January 2008).

2.2.4 No Seawall Construction at Pier 66 Between Blanchard and Battery Streets Is Planned

No seawall work is proposed for any of the Build Alternatives between Blanchard and Battery Streets adjacent to the Bell Harbor International Conference Center (Pier 66). (This portion was upgraded within the last 10 years when the Bell Harbor Conference Center and marina were constructed by the Port of Seattle.)

2.3 Rebuild Alternative

The Rebuild Alternative includes replacing the existing viaduct and seawall with the following components:

- South – Replace the viaduct with SR 99 at-grade and SR 519 elevated ramps.
- Central – Rebuild and retrofit the viaduct; retrofit existing ramps at Seneca, Columbia, Elliott, Western, and Battery.
- North Waterfront – Reconstruct the Alaskan Way surface street.
- North – No work is proposed in the north section of the project area.
- Seawall – Rebuild the seawall from S. Washington Street up to Myrtle Edwards Park.

Exhibit 2-1 shows the proposed Rebuild Alternative. There are no options proposed with the Rebuild Alternative.

The Rebuild Alternative includes a combination of new construction, rebuild, and retrofit[3] of the Alaskan Way Viaduct and a rebuild of the Alaskan Way Seawall. The alignment for the Rebuild Alternative generally follows the existing SR 99 alignment from south of S. Holgate Street to the BST, with the rebuild section from S. King Street to Pike Street. The retrofit section runs from Pike Street to the BST and also includes the existing ramps. Retrofit is proposed for approximately 20 percent of the viaduct length. The proposed work along the Alaskan Way Seawall runs from S. Washington Street to Myrtle Edwards Park.

[3] "Rebuild" means replacing most of the existing structure in approximately the same location. "Retrofit" means strengthening the existing structural members and adding new seismic-resisting elements.

Rebuild Alternative

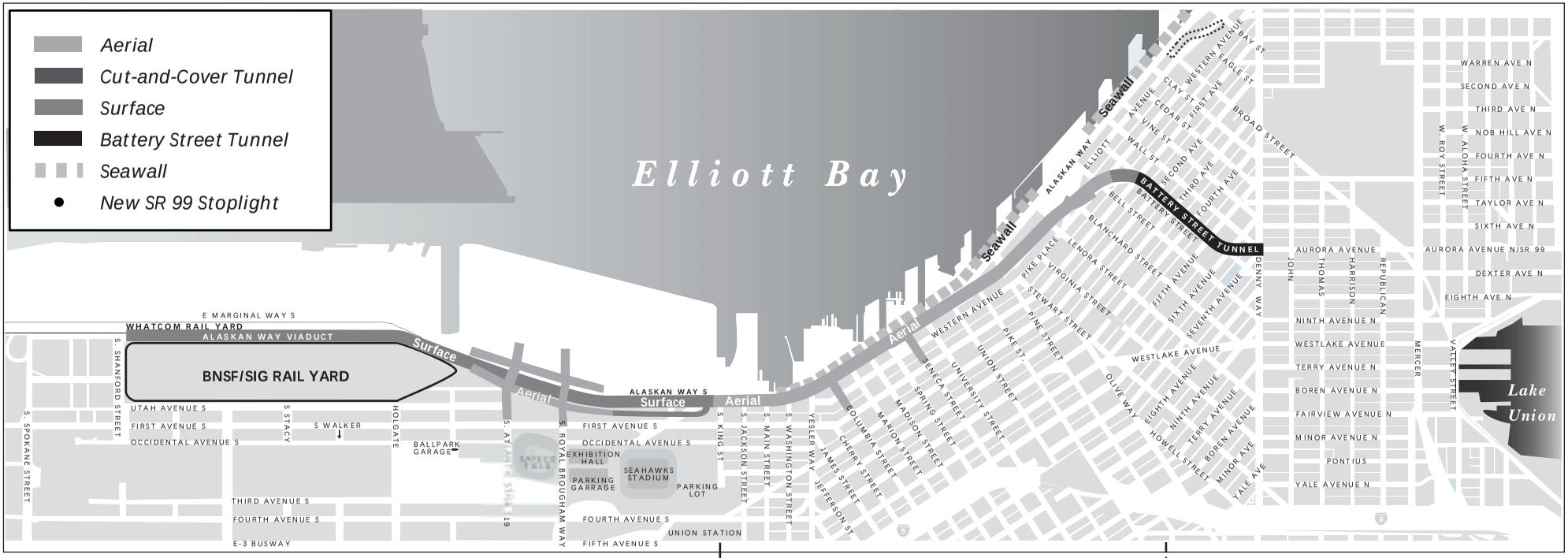

SOUTH
S. Spokane - S. King

CENTRAL
S. King - Battery St. Tunnel

N. WATERFRONT
Pike - Broad

NORTH
Battery St. Tunnel - Ward

Exhibit 2-1

2.3.1 South – S. King Street to S. Spokane Street

SR 99 At-Grade With SR 519 Elevated Access Ramps

SR 99 Roadway – At-Grade

In the south end, no changes are proposed between S. Spokane Street and S. Hanford Street. From S. Hanford Street north to S. Royal Brougham Way, the existing SR 99 mainline will be replaced with a six-lane, at-grade roadway. At this location, the roadway cross section will transition from the existing three 11-foot-wide northbound and southbound lanes to three 12-foot-wide lanes in each direction. In addition, this section of roadway will be located to the west of the existing alignment onto the site of the existing Whatcom Rail Yard. The Whatcom Rail Yard will be relocated to the east and combined with the existing BNSF Seattle International Gateway (SIG) Rail Yard.

Near S. Royal Brougham Way, traffic heading to downtown will be separated from SR 99 mainline traffic by providing northbound and southbound two-lane ramps that will connect to a surface roadway near S. King Street. SR 99 traffic will continue on a four-lane roadway (two lanes in each direction) connecting to the central project area.

SR 99 traffic will continue at-grade to approximately S. Dearborn Street, where it will transition to a single-level side-by-side aerial structure at S. King Street.

For this alternative, the ferry holding area currently provided under the viaduct will be relocated to Terminal 46 or to a site east of SR 99.

SR 519 Connection – Elevated Ramps at S. Atlantic Street and S. Royal Brougham Way

With this alternative, aerial ramps at S. Atlantic Street and S. Royal Brougham Way will be constructed. The ramps will provide a connection to SR 519 and will provide grade separation between SR 99, S. Atlantic Street, S. Royal Brougham Way, and the BNSF SIG Rail Yard. Between S. Atlantic Street and S. King Street, E. Marginal Way will be relocated to the west of its current alignment onto Terminal 46 to allow required space for the new ramps.

The SR 99 mainline will run through this area at-grade. It will pass between aerial structures located on the east and west side and below four-lane (two lanes each way) underpasses at S. Atlantic Street and S. Royal Brougham Way as shown below. (Refer to Exhibit R-04 of Appendix W, Alternatives and Options Drawings, which shows the SR 519 ramp movements at S. Atlantic Street and S. Royal Brougham Way.)

Ramp movements provided by the SR 519 connection will include:

- Northbound off from SR 99 near S. Holgate Street to S. Atlantic Street and S. Royal Brougham Way
- Northbound onto SR 99 from S. Royal Brougham Way
- Northbound off from SR 99 to Alaskan Way near S. King Street
- Southbound onto SR 99 from E. Marginal Way near S. Holgate Street
- Southbound off from SR 99 to S. Atlantic Street and S. Royal Brougham Way

Changes to BNSF SIG Rail Yard, Whatcom Rail Yard, and BNSF Tail Track

From S. Hanford Street to S. Holgate Street, SR 99 will be relocated to the west into what is now the Whatcom Rail Yard. The BNSF SIG Rail Yard will be reconfigured to incorporate the relocated Whatcom Rail Yard track function. In addition, the existing BNSF tail track will be relocated from its planned location on Terminal 46 to the east side of SR 99. The tail track will extend to south of Railroad Way S. (See Exhibit R104 for the location of the relocated tail track in relation to the SR 519 ramps.)

2.3.2 Central – S. King Street to Battery Street Tunnel

Rebuild Viaduct

Rebuild Double-Level Viaduct From S. King Street to Union Street

From S. King Street to Yesler Way, the Rebuild Alternative transitions from a single-level, side-by-side to a double-level structure. The double-level viaduct will be rebuilt in the same alignment as the existing viaduct. A minimum of 24 feet of vertical clearance will be provided below the viaduct.

From Yesler Way to Union Street, the double-level viaduct's overall structure width will be 4 feet wider than the existing viaduct—2 feet to the east and 2 feet to the west. Between Yesler Way and Seneca Street, there will be four northbound lanes plus the Seneca Street off-ramp lane and three southbound lanes plus the Columbia Street on-ramp lane. Between Seneca Street and Pike Street, there will be three northbound lanes and three southbound lanes. The northbound viaduct width will vary from 55 to 67 feet to accommodate the Seneca Street off-ramp. The southbound width will also vary 5 to 7 feet to accommodate the Columbia Street on-ramp. A minimum of 24 feet of vertical clearance will be provided below the viaduct.

Retrofit Ramps at Columbia and Seneca Streets

The existing southbound Columbia Street on-ramp and Seneca Street off-ramp will be retrofitted and will include new foundations. The last span on both the Columbia and Seneca Street ramps connecting to the viaduct will be rebuilt. The existing alignment and lane widths will remain the same at 27 feet each.

Retrofit Connection From Union Street to Battery Street Tunnel

From Union Street to the BST, the viaduct will be retrofitted in the existing alignment. There are several different structure types that make up the viaduct in the section between Union Street and the BST. These structure types include the transition piece between Union and Pike Streets, the side-by-side concrete structures from Pike Street to Stewart Street, the side-by-side steel structures crossing the BNSF railroad from Stewart Street to Virginia Street, and the single-level viaduct from Virginia Street to the BST.

Transition Piece Between Union Street and Pike Street

In this section, the viaduct will transition from a double-level structure to two single-level, side-by-side structures, similar to the existing AWV. There will be three northbound and three southbound lanes. The existing single-level viaduct will be retrofitted, whereas the existing double-level viaduct will be rebuilt. The upper northbound lanes will separate to the east, while the lower southbound lanes will separate to the west, following the existing alignment. The northbound structure width will vary from 52 to 67 feet. (Refer to Exhibit A-10 in Appendix W). A minimum of 24 feet of vertical clearance will be provided below the viaduct.

Single-Level Concrete Structures From Pike Street to Stewart Street

The existing single-level, concrete side-by-side viaduct structures will be retrofitted following the same alignment. The retrofit will include seismically strengthening the existing frames and adding new frames. Three lanes will remain in each direction. The existing lateral width will increase approximately 8 feet.

Single-Level Steel Structures From Stewart Street to Virginia Street

The two existing single-level steel viaduct structures will be retrofitted. The retrofit will include building a new steel framework at the top of a newly drilled shaft foundation system. An offset column with a transfer truss system is required at two locations due to the railroad crossing. Three lanes will remain in each direction. The existing lateral width of the structure will increase from 40 feet to approximately 45 feet, allowing the lane and shoulder widths to be increased.

Single-Level Viaduct From Virginia Street to Battery Street

The single-level viaduct will be retrofitted on an alignment similar to the existing viaduct. The retrofit will include seismically strengthening the existing frames and adding new frames or single columns and foundations. The overall structure width will be approximately 2.5 feet wider than the existing structure. Between Virginia Street and Blanchard Street, there will be three lanes in each direction that will transition into two lanes in each direction. Between Blanchard Street and the BST, there will be two lanes in each direction. The structure width will vary in this section to accommodate the on- and off-ramps at Western and Elliott Avenues.

Western Avenue, Elliott Avenue, and Battery Street Ramps

The existing northbound Western Avenue off-ramp and southbound Elliott Avenue on-ramp to and from the north at Western Avenue and Elliott Avenue respectively will be retrofitted in place. The existing alignments will remain the same, although the ramp widths will increase by approximately 2 feet.

Alaskan Way Surface Street

The Alaskan Way surface street will be rebuilt in its existing footprint as part of the Rebuild Alternative. (See Attachment A of this technical memorandum for the discussion of urban design variations for surface street improvements and Appendix X for drawings of design variations for surface street improvements.)

2.3.3 North Waterfront – Pike Street to Broad Street

Alaskan Way Surface Street

The Alaskan Way surface street will be rebuilt in its existing footprint as part of the Rebuild Alternative. (See Attachment A of this technical memorandum for the discussion of urban design variations for surface street improvements and Appendix X for plan drawings of design variations.)

Detours

The temporary Alaskan Way will be located on the widened Alaskan Way surface street (Pike Street to Broad Street). The temporary detours of Alaskan Way surface street and SR 99 are described more fully in Section 4.2, Rebuild Alternative Construction Sequencing.

2.3.4 North – Battery Street Tunnel to Ward Street

For the Rebuild Alternative, there are no planned construction activities from the BST north to Ward Street.

2.3.5 Seawall – S. King Street to Myrtle Edwards Park

For the Rebuild Alternative, the seawall will be rebuilt with soil improvements behind the existing seawall. The soil improvements will be used to stabilize the liquefiable soils behind the seawall and under the timber relieving platform. A new face will be provided for the Type B Seawall and the Pile-Supported Gravity Walls south of Madison Street. It is currently anticipated that the Type A Seawall will remain in place and be attached to the new seawall. A new pre-cast concrete face panel will be placed where needed (such as at exposed areas of the seawall). The new face wall (where needed) and a new sidewalk would be supported by drilled shafts or other concrete structures supported on top of the improved soil (see Section 3.2.1 for a description of drilled shaft construction). The specific methods to be used are subject to more detailed engineering analysis.

Refer to Appendix W, Exhibits R-19 through R-22 for drawings that exhibit replacement of the three types of seawall (Pile-Supported Gravity Seawall, Type B Seawall, and Type A Seawall).

2.4 Aerial Alternative

The Aerial Alternative includes replacing the existing viaduct and seawall with the following components:

- South – Replace the viaduct with a stacked aerial structure.
- Central – Replace the viaduct with an aerial structure.
- North Waterfront – Reconstruct the Alaskan Way surface street; use the Broad Street Detour during construction.
- North – Construct the Battery Street Tunnel Improvements; construct the Widened Mercer Underpass with the Thomas Street Overpass.
- Seawall – Rebuild the seawall.

The Aerial Alternative includes several possible options:

- South – Replace the viaduct with SR 99 at-grade and SR 519 elevated ramps.
- Central – No options proposed.
- North Waterfront – Use the Battery Street Flyover Detour during construction.

- North – Lower Aurora/SR 99 between Denny Way and Ward Street; reconnect the street grid over the top of lowered Aurora by building five new bridges at Thomas, Harrison, Republican, Mercer, and Roy Streets.
- Seawall – Replace the seawall with the Frame option.

The Aerial Alternative and the possible options are shown on Exhibit 2-12 and described in the text below.

2.4.1 South – S. Spokane Street to S. King Street

Stacked Aerial

SR 99 Roadway – Aerial

With the Aerial Alternative, no improvements are scheduled south of S. Stacy Street. From S. Stacy Street, new northbound and southbound roadways will proceed north between the BNSF SIG and Whatcom Rail Yards along the same alignment as the existing SR 99. The northbound roadway will become an aerial structure at S. Walker Street, while the southbound roadway will become an aerial structure at S. Holgate Street. Lane widths will meet full FHWA standards and shoulder widths.

The structures will transition from single-level side-by-side bridges with minimal shoulders to a double-level bridge with full 10-foot shoulders between S. Holgate Street and S. Massachusetts Street (refer to Appendix W, Alternatives and Options Drawings for Exhibits A-02 and A-14). The northbound lanes will be on the top level and the southbound lanes will be on the lower level of the double-level structure. At the same location, the new double-level bridge will shift slightly to the west and parallel the existing viaduct. A minimum of 24 feet vertical clearance will be provided below the bridge. An area below the viaduct could provide ferry holding area for up to 400 cars between S. Royal Brougham Way and S. King Street.

SR 519 Connection – At-Grade

Existing on- and off-ramps to and from the north will be eliminated at Railroad Way S. The main roadway will continue through the SR 519 over-crossing above the BNSF tail track to S. Atlantic Street and S. Royal Brougham Way. The configuration assumes connections to S. Atlantic Street and S. Royal Brougham Way at SR 519 and ferry holding area beneath the viaduct between S. Royal Brougham Way and S. King Street. Ramp movements will allow:

Aerial Alternative

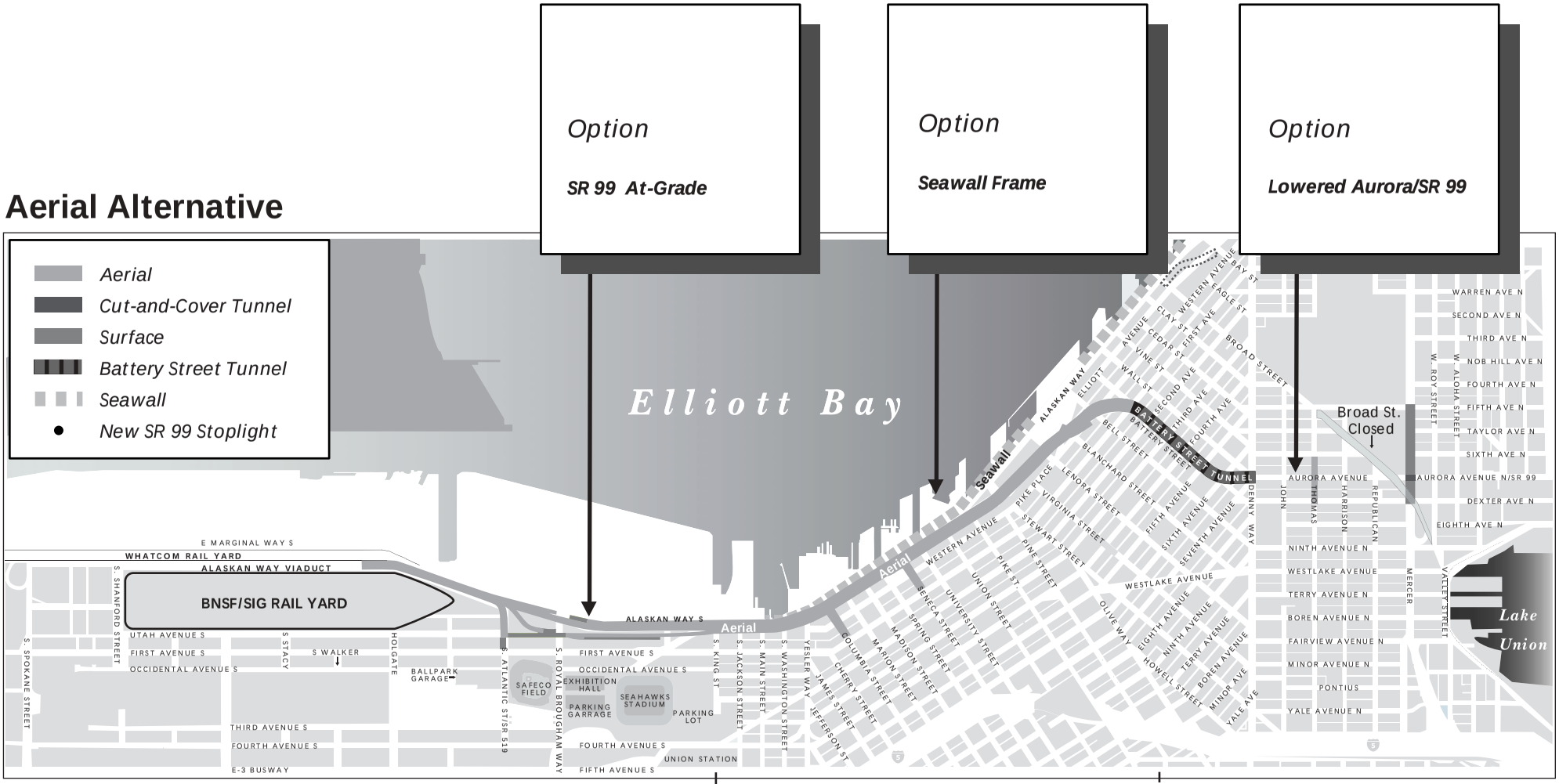

Exhibit 2-2

- Northbound off from SR 99 to S. Atlantic Street and S. Royal Brougham Way
- Northbound onto SR 99 from S. Royal Brougham Way
- Southbound onto SR 99 from S. Royal Brougham Way
- Southbound off from SR 99 to S. Royal Brougham Way

Refer to Exhibit A114 of Appendix W, Alternatives and Options Drawings, which shows the SR 519 connection at S. Atlantic Street.

Changes to the BNSF SIG Rail Yard, Whatcom Rail Yard, and BNSF Tail Track

Under this alternative, the BNSF SIG Rail Yard will not require any reconfiguration and the BNSF tail track will not be relocated. The Whatcom Rail Yard will be removed during construction and reconfigured with the BNSF SIG Rail Yard once construction is complete.

Option: SR 99 At-Grade With SR 519 Elevated Access Ramps

This option is the same as what was described for the Rebuild Alternative. The only differences are the proposed ramp connections at SR 519. These differences are described in the text below.

SR 99 Roadway – At-Grade

See text describing the SR 99 Roadway for the Rebuild Alternative.

SR 519 Connection – Elevated Ramps at S. Atlantic Street and S. Royal Brougham Way

This option is similar to what was described for the Rebuild Alternative. The primary difference is that this option proposes a different ramp configuration for the SR 519 connections.

Ramp movements provided at SR 519 with this option would include:

- Northbound off from SR 99 near S. Holgate Street to S. Atlantic Street and S. Royal Brougham Way
- Northbound onto SR 99 from S. Royal Brougham Way
- Southbound onto SR 99 from E. Marginal Way
- Southbound off from SR 99 to S. Atlantic Street and S. Royal Brougham Way

Changes to the BNSF SIG Rail Yard, Whatcom Rail Yard, and BNSF Tail Track

Changes to the BNSF SIG Rail Yard, Whatcom Rail Yard, and BNSF tail track would be similar to those discussed for the Rebuild Alternative. The BNSF tail track would be located on Terminal 46.

2.4.2 Central – S. King Street to Battery Street Tunnel

Aerial Viaduct

Aerial Structure From S. King Street to Pike Street

Beginning at S. King Street, the existing viaduct will be replaced with a new double-level aerial structure. The structure will proceed north in the same alignment as the existing Alaskan Way Viaduct; however, the new aerial structure will be wider than the existing viaduct. The footprint of the new aerial structure will extend west (toward the waterfront) of the current viaduct.

The new aerial structure will be four lanes wide (approximately 71 feet excluding the columns) with 12-foot-wide lanes from S. King Street to Pike Street. Ramps will be provided in their existing locations at Columbia and Seneca Streets. A cross section of the proposed structure at S. Jackson Street is shown in Exhibit A-16 of Appendix W, Alternatives and Options Drawings.

In addition, the Aerial Alternative will also require an entirely new temporary viaduct structure to be built to the west of the existing viaduct, along the waterfront from S. Royal Brougham Way to Union Street. The temporary structure will be a double-level aerial structure that will transition to a single-level side-by-side aerial structure near Yesler Way with two lanes in each direction. This temporary structure will provide continued traffic flow while the existing viaduct is torn down. The temporary structure is expected to remain in place from 4 to 7 years and will be removed at the end of the project.

Ramps at Columbia and Seneca Streets

Access to midtown will be provided to and from the south. The existing ramps at Columbia Street and Seneca Street will be replaced. The new ramps will be approximately 30 feet wide.

Aerial Connection From Pike Street to the Battery Street Tunnel

North of Pike Street, the double-level aerial viaduct will transition to a side-by-side aerial structure with three lanes in each direction. Ramps will be provided at Western and Elliott Avenues.

Ramps at Western Avenue, Elliott Avenue, and Battery Street

The existing ramps at Elliott and Western Avenues will be replaced with new ramps. The northbound off-ramp (to Western Avenue) will separate from the main SR 99 roadway at Virginia Street (reducing the northbound flow on SR 99 from three lanes to two) and connect to Western Avenue at Bell Street. The

southbound onramp will begin at the intersection of Elliott Avenue and Blanchard Street and rise to meet the main roadway at Virginia Street, increasing the number of southbound lanes from two to three. The ramps will be single-lane ramps, approximately 30 feet wide. The existing ramps at Battery Street will be closed to traffic, but will be maintained for emergency vehicle access only.

Alaskan Way Surface Street

With the Aerial Alternative, the Alaskan Way surface street will be reconfigured with two lanes northbound and two lanes southbound. A one-lane southbound service road with parking will be provided adjacent to the waterfront piers and businesses. (Refer to Attachment A of this technical memorandum for the discussion of urban design variations for the surface street improvements. See also Appendix X for drawings of the design variations.)

2.4.3 North Waterfront – Pike Street to Myrtle Edwards Park

Alaskan Way Surface Street

The Alaskan Way surface street will be rebuilt in its existing footprint as part of the Aerial Alternative. (Refer to Attachment A of this technical memorandum for the discussion of urban design variations for the surface street improvements. See also Appendix X for drawings of the design variations.)

Broad Street Detour

During construction, the Aerial Alternative will use the Broad Street Detour. The Broad Street Detour will require the construction of a temporary aerial structure from approximately the intersection of Alaskan Way surface street and Vine Street up to the intersection of Broad Street and Western Avenue.

Broad Street is reconfigured so eastbound traffic east of Denny Way is diverted at Thomas Street, requiring the construction of the two-lane bridge over SR 99 at Thomas Street.

Southbound SR 99 traffic is diverted off Aurora Avenue, via a widened two-lane off-ramp, onto westbound Broad Street. Between Aurora Avenue and Alaskan Way, Broad Street becomes three lanes westbound and one lane eastbound. Southbound SR 99 traffic continues at-grade on Alaskan Way until it connects to the viaduct in the vicinity of Pike Street via a second temporary elevated structure.

This detour will allow SR 99 traffic to flow while the Pike Street to BST connection is constructed. It will also allow for the Battery Street Tunnel Improvements to be built one side at a time. Refer also to Section 4.3, Aerial Alternative Construction Sequencing for details regarding traffic routing during construction.

Option: Battery Street Flyover Detour

The Battery Street Flyover Detour is an option that could be implemented instead of the Broad Street Detour. This option involves building a temporary side-by-side (four lanes) aerial structure that would connect to the Battery Street Tunnel near First Avenue and Battery Street. It would rise over existing buildings between Western Avenue and Alaskan Way and touch down at street level. This detour would allow northbound and southbound traffic to travel on the temporary aerial flyover while the existing Battery Street Tunnel connection is torn down and rebuilt.

North – Battery Street Tunnel to Ward Street

There are two primary proposed improvements in the north. These include the Battery Street Tunnel Improvements and the Widened Mercer Underpass. In addition, there is one option in this section—the Lowered Aurora/SR 99 option could be constructed instead of the Widened Mercer Underpass. The proposed improvements are described below.

Battery Street Tunnel Improvements

Proposed Battery Street Tunnel Improvements include providing additional emergency egress points, improving existing electrical systems in the tunnel, and adding needed ventilation improvements to meet existing fire codes and other systems required to meet improved safety standards.

The BST will be lengthened on each end by approximately 115 feet to accommodate a new jet fan ventilation system. Four emergency egress points will be added (two on each side of the tunnel). These emergency egress stairways are expected to be located adjacent to Battery Street within the existing alleyways between Second and Third Avenues and between Fifth and Sixth Avenues.

Tunnel vent support structures will be constructed near Western Avenue and Battery Street and between John Street and Aurora Avenue. The structure at John Street and Aurora Avenue will also serve as an incident response facility. Mechanical/electrical rooms will also be provided.

The BST has two northbound and two southbound lanes connecting the Alaskan Way Viaduct to Aurora Avenue N. The Battery Street on- and off-ramps will be closed to the general public because of safety concerns arising from non-standard roadway geometry. The ramps will be closed to general

traffic but maintained for emergency vehicle access only. The existing tunnel was constructed with no shoulders. The tunnel roof serves as the Battery Street surface street.

Widened Mercer Underpass

Connections north of the Battery Street Tunnel are necessary for traffic flow during construction. When the viaduct is closed in the central waterfront section, and the Battery Street Tunnel undergoes improvements, the southbound SR 99 traffic will need to be detoured. Improvements to Mercer Street and other streets north of the BST are necessary so that the traffic detours can be established.

The existing Mercer Street will be widened, allowing improved traffic flow both during and after construction. The Widened Mercer Underpass will provide three lanes in each direction with a center turn lane (seven lanes total) from Fifth Avenue to Dexter Avenue. Aurora Avenue will be maintained at the existing grade, with the SR 99 overpass at the Widened Mercer Underpass reconstructed, maintaining three lanes northbound and southbound (six lanes total). This configuration will not include additional ramps to or from Mercer and Roy Streets.

During construction, the Mercer Street and Thomas Street improvements would change traffic flow in the north end to allow for SR 99 traffic detours. Once construction was completed, the Mercer and Thomas Street upgrades would improve east/west circulation in the South Lake Union and lower Queen Anne neighborhoods. East/west connections for vehicles and pedestrians in the north end are currently constrained by Aurora/SR 99 because it acts as a barrier, interrupting the street grid. Once construction is completed, Broad Street would be closed between Fifth and Ninth Avenues, allowing for more streets to be reconnected.

After construction, these improvements would also provide benefits for improved circulation in the Lower Queen Anne and South Lake Union areas. Pedestrians will also have a greater number of connected streets within these neighborhoods.

Option: Lowered Aurora/SR 99

The Lowered Aurora/SR 99 option would lower the roadway profile of SR 99/ Aurora Avenue N. into a three/lane side/by/side retained cut section (six lanes total). This excavation would begin at Denny Way and end near Ward Street (approximately 3,600 linear feet). Broad Street would be closed and backfilled to grade from approximately Fifth Avenue N. to Ninth Avenue N., allowing the street grade to be reconnected. Mercer Street would be backfilled and regraded from approximately Taylor Avenue to Dexter Avenue N. Five new

bridge structures would cross over the lowered SR 99. Mercer Street would be a four-lane bridge structure eastbound over Aurora Avenue. Thomas Street, Harrison Street, Republican Street, and Roy Street would also have four-lane bridge structures. The existing northbound on- and southbound off-ramps at Denny Way would be retained but used for transit only. Additional ramps to and from an eastbound Mercer Street and westbound Roy Street couplet would be provided, including a northbound off-ramp to Mercer Street, southbound on-ramp from Mercer Street, northbound on-ramp from Roy Street, and a southbound off-ramp to Roy Street. The SR 99 northern limits for the project would extend to Prospect Street, where Aurora Avenue N. ascends to match the existing roadway grade near Ward Street.

2.4.4 Seawall – S. King Street to Myrtle Edwards Park

Rebuilt Seawall

The proposal to rebuild the seawall is the same as what was described for the Rebuild Alternative in Section 2.3.5.

Option: Seawall Frame

The Seawall Frame is an option proposed for replacing the seawall. Instead of rebuilding the seawall, the seawall could be replaced with the Seawall Frame (see Appendix W, Alternatives and Options Drawings, Exhibits A-39 through A-42 for Seawall Frame option with Type A Seawall). A continuous secant pile wall would be constructed behind the existing seawall as described in the Tunnel Alternative. A row of drilled shafts (spaced 10 to 20 feet apart) would be installed 30 to 60 feet east of the secant pile wall.

Two continuous parallel cast-in-place concrete cap beams would be constructed, one above the secant wall and another above the row of drilled shafts. The two parallel cap beams would be tied together as a frame with cast-in-place beams. This cast-in-place frame would have 12 feet of fill above it. The concrete beam would be constructed in a similar manner as a pile cap.

2.5 Tunnel Alternative

The Tunnel Alternative includes replacing the existing viaduct and seawall with the following components:

- South – Replace the viaduct with SR 99 at-grade and SR 519 elevated ramps.
- Central – Replace the viaduct with a tunnel; construct the connection to the Battery Street Tunnel with ramps to the Alaskan Way surface street near Pike Street.

- North Waterfront – Reconstruct the Alaskan Way surface street; use the Broad Street Detour during construction.
- North – Construct the Battery Street Tunnel Improvements and the Widened Mercer Underpass.
- Seawall – Replace the seawall with the outer wall of the tunnel. In areas where there is no tunnel, rebuild the seawall.

In addition, there are several possible options for the Tunnel Alternative:

- South – Replace the viaduct with a side-by-side aerial structure.
- Central – Construct the connection to the Battery Street Tunnel with ramps to Elliott and Western.
- North Waterfront – Use the Battery Street Flyover Detour during construction.
- North – No options proposed.
- Seawall – No options proposed.

The Tunnel Alternative and the possible options are shown on Exhibit 2-3 and described in the text below.

2.5.1 South – S. Spokane Street to S. King Street

The southern limits of the project for the Tunnel Alternative are near S. Hanford Street where the new mainline will match the existing SR 99 roadway. The proposed Tunnel Alternative will replace the existing SR 99 Alaskan Way Viaduct with a new six-lane roadway (three lanes each way) from S. Hanford Street to Pike Street. The new roadway will be located along the alignment of the existing SR 99 but relocated to the west of the current SR 99 alignment onto the site of the existing Whatcom Rail Yard. The Whatcom Rail Yard will be relocated to the east and combined with the existing BNSF SIG Rail Yard.

SR 99 At-Grade With SR 519 Elevated Access Ramps

This alternative is the same as what was described for the Rebuild Alternative. The only differences are the proposed ramp connections at SR 519. These differences are described below.

SR 99 Roadway – At-Grade

See text describing the SR 99 Roadway for the Rebuild Alternative.

Tunnel Alternative

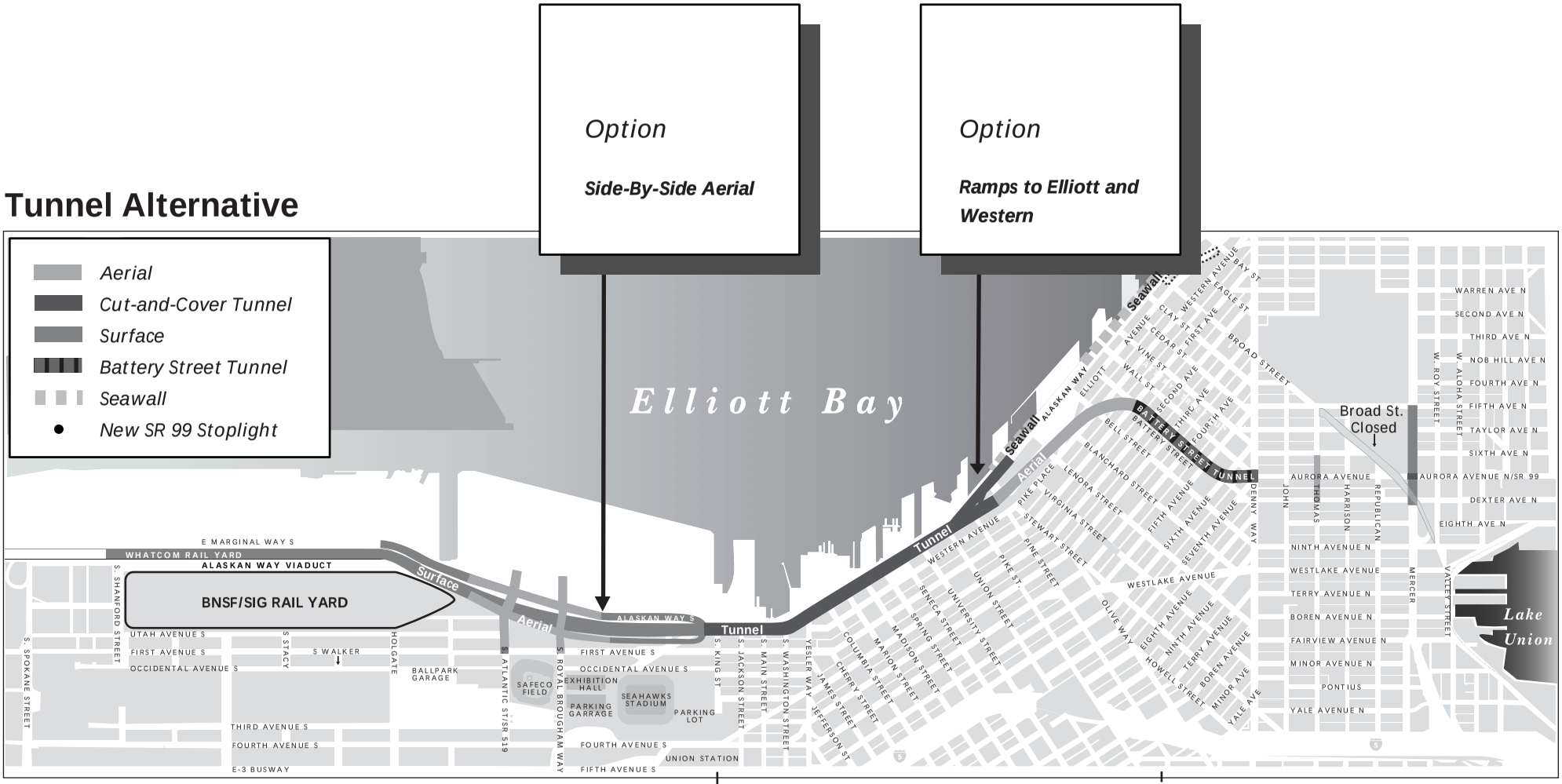

Exhibit 2-3

SR 519 Connection – Elevated Ramps at S. Atlantic Street and S. Royal Brougham Way

This is similar to what was described for the Rebuild Alternative in Section 2.3.1. The primary difference is that this option proposes a different ramp configuration for the SR 519 connections.

Ramp movements at this intersection will include:

- Northbound off from SR 99 near S. Holgate Street to S. Atlantic Street and S. Royal Brougham Way
- Northbound off from SR 99 near S. Royal Brougham Way to S. King Street
- Northbound onto SR 99 from S. Royal Brougham Way
- Southbound onto SR 99 from E. Marginal Way near S. Holgate Street
- Southbound off from SR 99 near Railroad Way to Alaskan Way
- Southbound onto SR 99 from Alaskan Way near S. Dearborn Street

Changes to the BNSF SIG Rail Yard, Whatcom Rail Yard, and BNSF Tail Track

Similar to those discussed for the Rebuild Alternative, the roadway will be maintained at grade with the alignment relocated to the west of the current SR 99 onto the site of the existing Whatcom Rail Yard between S. Hanford and S. Holgate Streets. The Whatcom Rail Yard will be relocated to the east and combined with the existing BNSF SIG Rail Yard. The BNSF tail track will be relocated from its planned location on Terminal 46 to the east side of SR 99. Once constructed, the tail track will extend from the reconfigured BNSF SIG Rail Yard to just south of S. King Street.

Option: Side-by-Side Aerial

SR 99 Roadway – Side-by-Side Aerial

This option would replace the existing SR 99 Alaskan Way Viaduct with a new six-lane roadway (three lanes each way) from S. Hanford Street to S. King Street located generally along the alignment of the existing SR 99. Between S. Hanford Street and S. Holgate Street, the SR 99 roadway would be maintained at grade with the alignment relocated to the west of the current SR 99 onto the site of the existing Whatcom Rail Yard. Near S. Holgate Street, the SR 99 mainline would ascend to a side-by-side aerial structure above S. Atlantic Street and S. Royal Brougham Way and the BNSF tail track. The SR 99 mainline would descend to grade near S. Dearborn Street, then it would descend below grade within a retained cut to the south portal of the mainline tunnel located near S. King Street.

SR 519 Connection – At-Grade Ramps

With this option, through the SR 519 ramp configuration, the SR 99 mainline crosses above the BNSF SIG Rail Yard and tail track, S. Atlantic Street, and S. Royal Brougham Way. E. Marginal Way and the northbound and southbound lanes would ascend from S. Holgate Street on a retained fill to two three-lane bridge structures, then descend to grade on a retained fill near S. Dearborn Street. The configuration provides connections to S. Atlantic Street and S. Royal Brougham Way at SR 519. Relocation of E. Marginal Way to the west would be required while maintaining the BNSF tail track crossing at S. Atlantic Street and locating ferry holding within the existing Terminal 46 site.

Ramp movements would include:

- Northbound off from SR 99 to S. Atlantic Street and S. Royal Brougham Way
- Northbound off from SR 99 near S. Royal Brougham Way to Alaskan Way
- Northbound onto SR 99 from S. Royal Brougham Way
- Southbound onto SR 99 from E. Marginal Way near S. Holgate Street
- Southbound off from SR 99 near Railroad Way S. to Alaskan Way
- Southbound onto SR 99 from Alaskan Way near S. Dearborn Street

Changes to the BNSF SIG Rail Yard, Whatcom Rail Yard, and BNSF Tail Track

Due to the increased width of the aerial structure compared to existing conditions, the Whatcom Rail Yard would need to be relocated. Under this option, the BNSF SIG Rail Yard would be enlarged and reconfigured to include the relocated Whatcom Rail Yard tracks. This would result in expansion of the existing BNSF SIG Rail Yard to the south to near S. Hanford Street. The BNSF tail track would be relocated to the east side of SR 99 and extend from the reconfigured SIG Rail Yard to just south of Railroad Way S.

2.5.2 Central – S. King Street to the Battery Street Tunnel

The central tunnel will be a single-level side-by-side cut-and-cover tunnel structure with three lanes in each direction (see Exhibit T-13 of Appendix W, Alternatives and Options Drawings). The tunnel alignment will be located along the inboard side of the existing seawall. The width of the southbound tunnel will be established to fit between the seawall and the existing viaduct footings to allow for temporary two-lane northbound and southbound traffic within the southbound tunnel while the existing viaduct is being removed and the northbound tunnel constructed. Through the central area, the cut-

and cover tunnel will replace both the existing Alaskan Way Viaduct and the existing seawall.

Tunnel Structure From S. King Street to Pike Street

The Tunnel will descend below grade within a retained cut to the south portal of the SR 99 mainline tunnel located near S. King Street. From the south portal, the roadway will descend underground in a six lane (three lanes each way) side by side cut and cover tunnel through the central area along the existing seawall to Pike Street. The north portal of the mainline tunnel will be located north of the Pike Place Market Hillclimb.

Ramps at Columbia and Seneca Streets

No ramps will be provided at Columbia and Seneca Streets.

Tunnel With No Ramps at Elliott Avenue and Western Avenue

Aerial Connection From Pike Street to the Battery Street Tunnel

North of Pike Street, the mainline roadway will transition to a side by side aerial structure. The roadway will rise from the tunnel to the surface in a retained cut and transition to a side by side aerial structure connecting to the existing BST, as shown in Exhibit T15 of Appendix W, Alternatives and Options Drawings. The roadway with three lanes each way transitions in the tunnel becoming two lanes each way, as two of the tunnel's six lanes become on and off ramps to the Alaskan Way surface street near the north end of the tunnel.

A northbound off ramp and southbound on ramp north of Pike Street near Union Street will extend to the Alaskan Way surface street. No ramps will be provided to Elliott or Western Avenues.

Battery Street Tunnel Improvements

Ramps at Western Avenue, Elliott Avenue, and Battery Street

With this alternative, no ramps will be provided at Western Avenue, Elliott Avenue, or Battery Street.

Alaskan Way Surface Street

During the seawall construction along the north waterfront, the Alaskan Way surface street will be temporarily located to the east over the existing streetcar tracks. The permanent Alaskan Way will be replaced along the seawall. (Refer to Attachment A of this technical memorandum for the discussion of urban design variations for the surface street improvements. See also Appendix X for drawings of the design variations.)

Option: Tunnel With Ramps at Elliott Avenue and Western Avenue

With this option, the aerial connection between Pike Street and the BST provides two lanes each way. However, ramps will be provided at Western Avenue and Elliott Avenue in lieu of the Alaskan Way ramps, providing Ballard/Interbay access from the tunnel.

2.5.3 North Waterfront – Pike Street to Myrtle Edwards Park

At Pike Street, the main roadway will diverge from the seawall with a new four-lane (two lanes each way) connection to the existing BST. At Pike Street, one-lane northbound and southbound ramps will surface into Alaskan Way along the north waterfront seawall.

Broad Street Detour

The Broad Street Detour is similar to what was described for the Aerial Alternative in Section 2.4.3; the primary difference is that the temporary structures near Pike Street will be slightly different. The structures needed in this area will vary depending on the construction stage, but will include either a temporary aerial connection to the viaduct from the Alaskan Way surface street or a transitional piece from the Alaskan Way surface street into the bypass tunnel.

Option: Battery Street Flyover Detour

The Battery Street Flyover Detour option could be implemented instead of the Broad Street Detour, similar to that described for the Aerial Alternative in Section 2.4.3, with differences described above under the Broad Street Detour.

2.5.4 North – Battery Street Tunnel to Ward Street

For the Tunnel Alternative, proposed improvements in the north include the Battery Street Tunnel Improvements and the Widened Mercer Underpass.

Battery Street Tunnel

The existing BST will be retrofitted and used for the connection to Aurora Avenue N. For additional details on Battery Street Tunnel Improvements, see the description for the Aerial Alternative under Section 2.4.4.

Widened Mercer Underpass

Improvements proposed in the Tunnel Alternative in the north include a two-lane bridge structure for the Thomas Street overpass and the widening of Mercer Street to provide for three lanes in each direction plus a center turn lane (seven lanes total). Under this alternative, the SR 99 bridge deck over Mercer Street will be rebuilt using typical bridge construction methods.

Thomas Street Bridge

A new bridge with one lane in each direction will be constructed over the top of SR 99 to connect Thomas Street. The bridge will span over the existing SR 99 to pile-supported abutments at each side.

2.5.5 Seawall – S. King Street to Myrtle Edwards Park

The Tunnel Alternative includes replacing the existing seawall from S. King Street to Myrtle Edwards Park. With the Tunnel Alternative, the western wall of the tunnel will serve as both the outer tunnel wall and the new seawall. Therefore, from S. King Street up to about Pike Street, the existing seawall will be replaced with a secant pile wall. In most cases, the new seawall/outer tunnel wall will be constructed behind the existing seawall. However, from S. Washington Street to Yesler Way, the new seawall/tunnel will extend approximately 21 feet out into Elliott Bay from its current location.

North of Pike Street, the seawall will be rebuilt, as described under the Rebuild Alternative in Section 2.3.5.

2.6 Bypass Tunnel Alternative

The Bypass Tunnel Alternative includes replacing the existing viaduct and seawall with the following components:

- South – Replace the viaduct with SR 99 at-grade and SR 519 elevated ramps.
- Central – Replace the viaduct with a four-lane bypass tunnel; construct the connection to the Battery Street Tunnel without access ramps to Elliott and Western Avenues.
- North Waterfront – Reconstruct Alaskan Way surface street with four lanes; use the Broad Street Detour during construction.
- North – Construct the Battery Street Tunnel Improvements and the Widened Mercer Underpass, expanding Mercer Street to seven lanes. Build a new two-lane bridge over Aurora/SR 99 at Thomas Street, and backfill Broad Street from Fifth to Ninth Avenues.
- Seawall – Replace the seawall with the outer wall of the tunnel. In areas where there is no tunnel, the seawall will be rebuilt.

The Bypass Tunnel Alternative will replace the existing SR 99 Alaskan Way Viaduct with an at-grade roadway combined with a bypass tunnel through the central area. The alignment is located generally along the alignment of the existing SR 99, with project limits extending from S. Hanford Street in the south to Valley Street in the north. From S. Hanford Street to S. Royal Brougham Way, the mainline will be replaced with a six-lane roadway (three

lanes each way) relocated to the west of the current SR 99 alignment onto the site of the existing Whatcom Rail Yard. The Whatcom Rail Yard will be relocated to the east and combined with the existing BNSF SIG Rail Yard.

The Bypass Tunnel Alternative includes several possible options:

- South – No options proposed.
- Central – Construct the connection to the Battery Street Tunnel with ramps to Elliott Avenue and Western Avenue. Build a separate roadway connecting the Alaskan Way surface street to Elliott and Western Avenues to provide access to the Ballard/Interbay area.
- North Waterfront – Use the Battery Street Flyover Detour during construction.
- North – No options proposed.
- Seawall – No options proposed.

The Bypass Tunnel Alternative and the possible options are shown on Exhibit 2.4 and described in the text below.

2.6.1 South – S. Spokane Street to S. King Street

SR 99 At-Grade With SR 519 Elevated Access Ramps

With this alternative, SR 99 at-grade with SR 519 elevated ramps is the same as what was described for the Rebuild Alternative. The only differences are the proposed ramp connections at SR 519. These differences are described in the text below.

SR 99 Roadway – At-Grade

Near S. Royal Brougham Way, the roadway divides, with traffic to midtown diverted onto northbound and southbound two-lane ramps that connect to a surface roadway near S. King Street. SR 99 through traffic continues on a four-lane roadway (two lanes each way) connecting to the bypass tunnel near S. Dearborn Street. The location of E. Marginal Way will be determined based on the location of the ferry holding area. With ferry holding located to a site west of SR 99, E. Marginal Way between S. Atlantic and S. King Streets will be relocated to the west of its current alignment into the Port of Seattle's Terminal 46 site.

The surface traffic to midtown is routed onto northbound and southbound two-lane, one-way ramps at-grade connecting to SR 99/Alaskan Way at S. King Street in the central area. The bypass route, aligned between these ramps, will be a four-lane (two lanes each way) at-grade roadway from

Bypass Tunnel Alternative

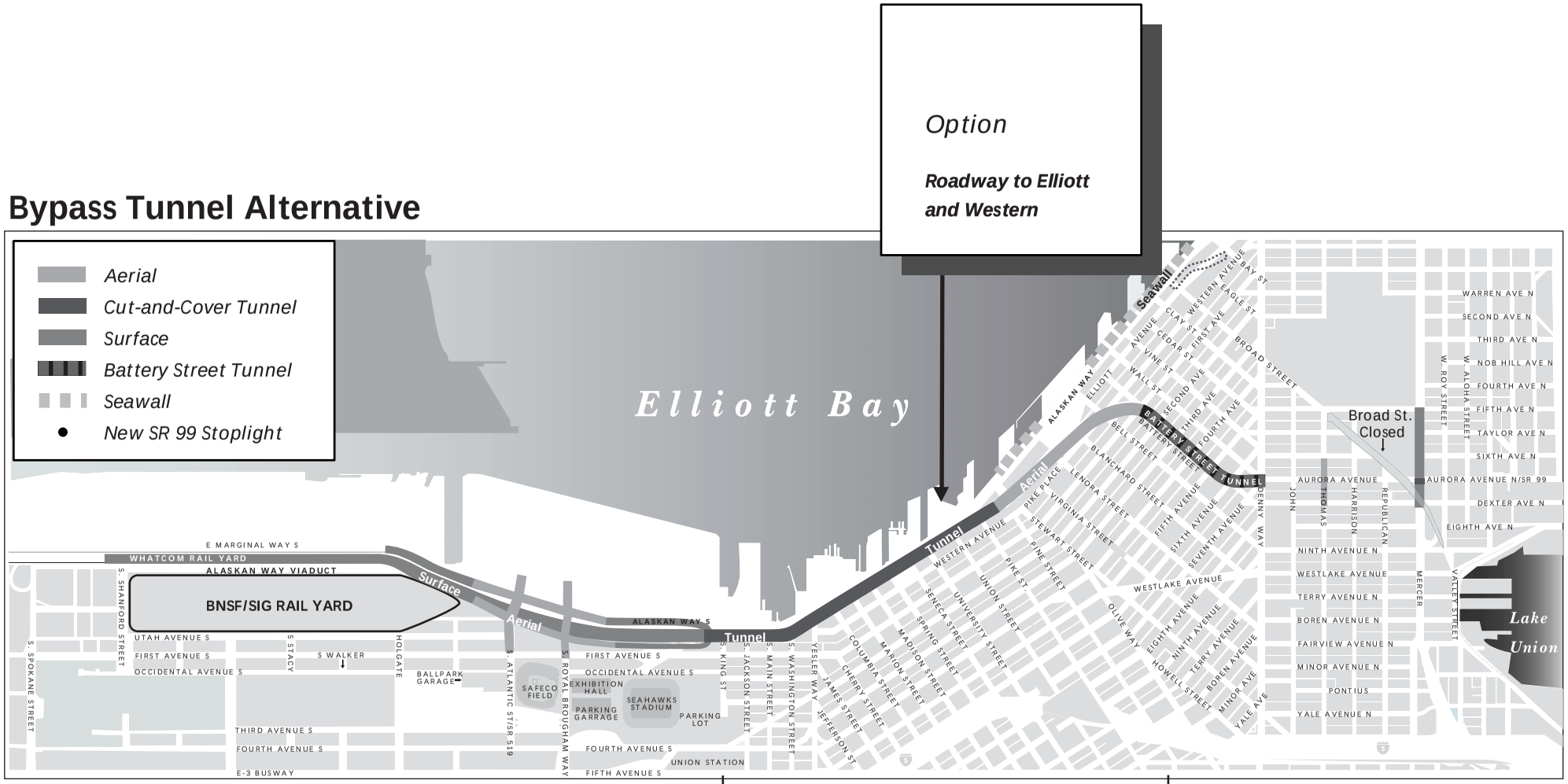

SOUTH
S. Spokane - S. King

CENTRAL
S. King - Battery St. Tunnel

N. WATERFRONT
Pike - Broad

NORTH
Battery St. Tunnel - Ward

Exhibit 2-4

S. Royal Brougham Way to S. Dearborn Street. Near S. Dearborn Street, the bypass roadway profile descends in a retained cut section to the south portal of the bypass tunnel near S. King Street. The ferry holding area is relocated to a site west of SR 99, south of S. King Street on the Terminal 46 site.

Also see text describing the SR 99 Roadway for the Rebuild Alternative.

SR 519 Connection – Elevated Ramps at S. Atlantic Street and S. Royal Brougham Way

This option is similar to what was described for the Rebuild Alternative. The primary difference is that this option proposes a different ramp configuration for the SR 519 connections.

Ramp movements at this intersection will include:

- Northbound off from SR 99 near S. Holgate Street to S. Atlantic Street and S. Royal Brougham Way
- Northbound off from SR 99 to Alaskan Way near S. King Street
- Northbound onto SR 99 from S. Royal Brougham Way
- Southbound onto SR 99 from E. Marginal Way near S. Holgate Street
- Southbound onto SR 99 from S. King Street
- Southbound off from SR 99 to S. Atlantic Street and S. Royal Brougham Way

Changes to the BNSF SIG Rail Yard, Whatcom Rail Yard, and BNSF Tail Track

Changes to the BNSF SIG Rail Yard, Whatcom Rail Yard, and BNSF tail track would be similar to the Rebuild Alternative. The BNSF tail track will be relocated from its planned location on Terminal 46 to the east side of SR 99. The tail track will extend from the reconfigured BNSF SIG Rail Yard to south of Railroad Way S.

2.6.2 Central – S. King Street to Battery Street Tunnel

Bypass Tunnel Structure From S. King Street to Pike Street

The Bypass Tunnel will be a single-level cut-and-cover tunnel structure with four lanes (two lanes each way). The tunnel alignment will be located along the inboard side of the existing seawall, with the width of the tunnel section established to fit between the seawall and the existing viaduct foundations. The bypass tunnel section will be essentially the same as that proposed in the Tunnel Alternative for the southbound tunnel. (See Exhibit B-14 of Appendix W, Alternatives and Options Drawings for the central area bypass tunnel and surface roadway.)

Ramps at Columbia and Seneca Streets

No ramps will be provided at Columbia and Seneca Streets.

Connection From Pike Street to the Battery Street Tunnel

North of Pike Street, the tunnel will transition to a side-by-side aerial structure with two lanes in each direction. No ramps will be provided at Western and Elliott Avenues.

Ramps at Elliott and Western Avenues

With the Bypass Tunnel Alternative, no ramps will be provided at Western Avenue or Elliott Avenue. Access will be provided via an underpass near Broad Street.

Alaskan Way Surface Street

The Bypass Tunnel Alternative's Alaskan Way surface street will be rebuilt with two lanes in each direction. Ballard/Interbay traffic to the Ballard Interbay Northend Manufacturing and Industrial Center will be directed along the Alaskan Way surface street above the bypass tunnel from the exit at S. King Street. (Refer to Attachment A of this technical memorandum for the discussion of urban design variations for the surface street improvements. See also Appendix X for drawings of the design variations.)

Option: Bypass Tunnel with Roadway to Elliott and Western Avenues

With this option, the tunnel would be the same as described in the text above. A roadway would be built to connect Alaskan Way surface street to Western and Elliott Avenues.

2.6.3 North Waterfront – Pike Street to Myrtle Edwards Park

Alaskan Way Surface Street

The Alaskan Way surface street will be temporarily relocated to the east over existing streetcar tracks. The permanent Alaskan Way will be replaced along the seawall. (Refer to Attachment A of this technical memorandum for the discussion of urban design variations for the surface street improvements. See also Appendix X for drawings of the design variations.)

Battery Street Tunnel Connection – Pike Street to Battery Street Tunnel

The bypass tunnel will be connected to the BST with a side-by-side aerial structure constructed generally along the existing SR 99 right-of-way. From Pike Street, a four-lane (two lanes each way) side-by-side aerial structure will ascend from grade near Pike Street, pass above the BNSF mainline rail tracks,

cross over Elliott and Western Avenues, and descend to the surface to connect with the existing BST.

Broad Street Detour

The Broad Street Detour is similar to what was described for the Aerial Alternative. The primary difference is that the temporary structures near Pike Street will be slightly different. The structures needed in this area will vary depending on the construction stage, but will include either a temporary aerial connection to the viaduct from the Alaskan Way surface street or a transitional piece from the Alaskan Way surface street into the bypass tunnel.

Option: Battery Street Flyover Detour

The Battery Street Flyover Detour option could be implemented instead of the Broad Street Detour. The details are described for the Aerial Alternative in Section 2.4.3.

2.6.4 North – Battery Street Tunnel to Ward Street

For the Bypass Tunnel Alternative, proposed improvements in the north include the Battery Street Tunnel Improvements and the Widened Mercer Underpass. The proposed improvements are the same as what was described for the Aerial Alternative.

Battery Street Tunnel Improvements

See the description for the Aerial Alternative under Section 2.4.4.

Widened Mercer Underpass

See the description for the Aerial Alternative under Section 2.4.4.

2.6.5 Seawall – S. King Street to Myrtle Edwards Park

The Bypass Tunnel Alternative includes replacing the existing seawall from S. King Street to Myrtle Edwards Park. With both the Tunnel and Bypass Tunnel Alternatives, the western wall of the tunnel will serve as both the outer tunnel wall and the new seawall. Therefore, from S. King Street up to about Pike Street, the existing seawall will be replaced with a secant pile wall. In most cases, the new seawall/outer tunnel wall will be constructed behind the existing seawall. However, from S. Washington Street to Yesler Way, the new seawall/tunnel will extend approximately 60 feet out into Elliott Bay from its current location.

North of Pike Street, the seawall will be rebuilt as described under the seawall description in Section 2.3.5.

2.7 Surface Alternative

The Surface Alternative includes replacing the existing viaduct and seawall with the following components:

- South – Replace the viaduct with SR 99 at-grade and SR 519 elevated ramps.
- Central – Replace the viaduct with a signalized surface street; construct the new aerial connection to the Battery Street Tunnel with ramps to Elliott and Western Avenues. Build overpasses connecting Colman Dock Ferry Terminal to First Avenue. Build eastbound overpass at Columbia Street and westbound overpass at Seneca Street.
- North Waterfront – Reconstruct the Alaskan Way surface street; use the Broad Street Detour during construction.
- North – Construct the Battery Street Tunnel Improvements and the Widened Mercer Underpass.
- Seawall – Rebuild the seawall.

The Surface Alternative includes several possible options:

- South – Replace the viaduct with SR 99 at-grade and SR 519 at-grade.
- Central – No options proposed.
- North Waterfront – No options proposed.
- North – Leave existing SR 99 with added signals at Harrison, Republican, and Roy Streets.
- Seawall – No options proposed.

The Surface Alternative and the possible options are shown in Exhibit 2-5 and described in the text below.

2.7.1 South – S. Spokane Street to S. King Street

SR 99 At-Grade with SR 519 Elevated Access Ramps

This alternative is the same as what was described for the Rebuild Alternative. The only differences are the proposed ramp connections at SR 519. These differences are described in the text below (see Exhibit S-13 in Appendix X, Alternatives and Options Drawings, which shows SR 99 at-grade with SR 519 elevated ramps).

Surface Alternative

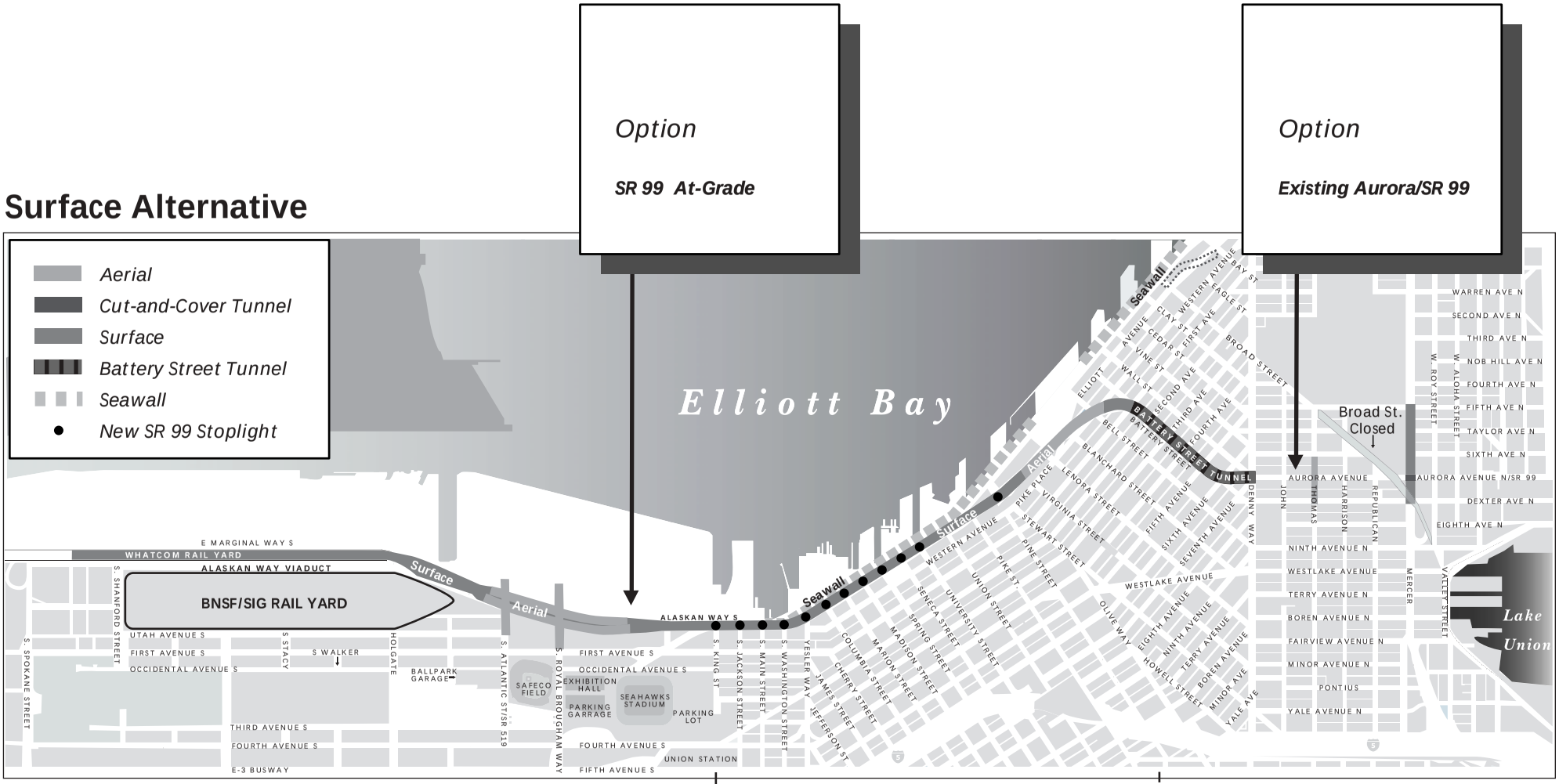

SOUTH
S. Spokane - S. King

CENTRAL
S. King - Battery St. Tunnel

N. WATERFRONT
Pike - Broad

NORTH
Battery St. Tunnel - Ward

Exhibit 2-5

SR 99 Roadway – At-Grade

The mainline SR 99 roadway through this section is an eight-lane roadway (four lanes each way) with three through lanes in each direction. In the northbound direction, one lane is added at S. Massachusetts Street and is dropped at the exit to Western Avenue at Yesler Way (see Exhibit S-14 in Appendix X, Alternatives and Options Drawings, which shows the central area from S. Main Street to Pike Street).

In the southbound direction, one lane is added at the Colman Dock Ferry Terminal near Yesler Way and is dropped at the S. Atlantic Street ramp. E. Marginal Way is relocated into the existing Terminal 46. An access road will be constructed connecting Pier 48 to Colman Dock Ferry Terminal.

See text above describing the SR 99 Roadway for the Rebuild Alternative.

SR 519 Connection – Elevated Ramps at S. Atlantic Street and S. Royal Brougham Way

This configuration is similar to what was described for the Rebuild Alternative in Section 2.3.1; however, the ramp movements will be slightly different.

Ramp movements at this intersection will include:

- Northbound off from SR 99 near S. Holgate Street to S. Atlantic Street and S. Royal Brougham Way
- Northbound onto SR 99 from S. Royal Brougham Way
- Southbound onto SR 99 from E. Marginal Way near S. Holgate Street
- Southbound off from SR 99 to S. Atlantic Street and S. Royal Brougham Way

Changes to the BNSF SIG Rail Yard, Whatcom Rail Yard, and BNSF Tail Track

The tail track would be shifted south and would terminate at S. Royal Brougham Way. If the tail track were shifted south, portions of the BNSF SIG Rail Yard would need to be shifted south to maintain rail operations.

Option: SR 99 At-Grade With SR 519 Ramp Connections At-Grade

SR 99 Roadway – At-Grade

The roadway would continue at-grade through signalized intersections at S. Atlantic Street and S. Royal Brougham Way. At these intersections, turn lanes would be added to the three mainline through lanes to accommodate all turning movements.

SR 519 Connections – At-Grade

The SR 99 roadway would continue at-grade through signalized intersections at S. Atlantic Street and S. Royal Brougham Way. At these intersections, turn lanes would be added to the three mainline through lanes to accommodate all turning movements and connection to SR 519.

Changes to the BNSF SIG Rail Yard, Whatcom Rail Yard, and BNSF Tail Track

This option would result in the greatest change to the BNSF SIG Rail Yard, Whatcom Rail Yard, and BNSF tail track. If this option were constructed, the BNSF SIG Rail Yard would be reconfigured to include relocated Whatcom Rail Yard tracks. In addition, the tail track would be shifted from its planned location on Terminal 46 to the east side of SR 99. The tail track would cross S. Atlantic Street at-grade and would continue north up to S. Royal Brougham Way. The combination of shifting the tail track south and incorporating the Whatcom Rail Yard into the BNSF SIG Rail Yard would result in the need to shift the entire SIG Rail Yard south from S. Hanford Street to S. Spokane Street. In addition, some minor track construction would be required south of S. Spokane Street near S. Dakota Street.

2.7.2 Central – S. King Street to Battery Street Tunnel

Surface Street

Alaskan Way Surface Street From S. King Street to Pike Street

SR 99 will be maintained at-grade through midtown to Pike Street. Through the central area, the roadway will have seven lanes (three lanes each way plus one turn lane) with bicycle paths. A one-lane southbound service road with parking will be provided adjacent to the waterfront piers and businesses.

Ramps at Columbia and Seneca Streets

No ramps will be provided at Columbia and Seneca Streets. Rather, signalized intersections at multiple locations along the Alaskan Way surface street will provide access to downtown.

Aerial Connection From Pike Street to the Battery Street Tunnel

North of Pike Street, the surface roadway will transition to a side-by-side aerial structure with two lanes in each direction. Ramps will be provided at Western and Elliott Avenues.

Ramps at Western Avenue, Elliott Avenue, and Battery Street

With this alternative, ramps will be provided at Western Avenue and Elliott Avenue. No ramps will be provided at Battery Street, except for emergency vehicle access.

2.7.3 North Waterfront – Pike Street to Myrtle Edwards Park

Alaskan Way Surface Street

The Alaskan Way surface street will be rebuilt to have two lanes in each direction along this portion of the waterfront.

Broad Street Detour

The Broad Street Detour is paired with this alternative. Under this detour, southbound SR 99 traffic will be routed down Broad Street, over the railroad tracks to the Alaskan Way surface street. Traffic will continue to travel south on the Alaskan Way surface street until it will connect to the viaduct or the Alaskan Way surface street (depending on the construction stage). This detour will allow SR 99 traffic to flow while the connection from Pike Street to the BST is being constructed. It will also allow for the Battery Street Tunnel Improvements to be built one side at a time.

The Broad Street Detour will require the construction of a temporary aerial structure over the railroad tracks from approximately the intersection of the Alaskan Way surface street and Vine Street up to the intersection of Broad Street and Western Avenue.

Temporary structures near Pike Street may also be needed throughout construction to route traffic onto the existing viaduct, depending on the construction staging.

2.7.4 North – Battery Street Tunnel to Ward Street

For the Surface Alternative, proposed improvements in the north include the Battery Street Tunnel Improvements and the Widened Mercer Underpass.

Battery Street Tunnel Improvements

The proposed Battery Street Tunnel Improvements are the same for the Surface Alternative as those described for Aerial Alternative in Section 2.4.4.

Widened Mercer Underpass

See the description for the Aerial Alternative under Section 2.4.4.

Option: Existing SR 99 With Added Signals at Roy, Republican, and Harrison Streets

This option would keep SR 99 as it is north of the BST, with signals added at Roy, Republican, and Harrison Streets. The street grid would be revised, changing Mercer and Roy Streets into a one-way couplet. Broad Street would be closed to traffic and backfilled. The local street grid would be reconnected from Denny Way to Republican Street, west of Aurora Avenue to Fifth Avenue.

2.7.5 Seawall – S. King Street to Myrtle Edwards Park

The Surface Alternative includes replacing the existing seawall from S. King Street to Myrtle Edwards Park. For this alternative, the seawall will be rebuilt as described under the Rebuild Alternative in Section 2.3.5. The existing seawall will be stabilized using the rebuilt seawall alternative.

Chapter 3 CONSTRUCTION METHODS

This chapter describes the overall construction approach, including anticipated methods and equipment for the replacement of the Alaskan Way Viaduct and the Alaskan Way Seawall. The text describes the overall construction approach for the alternative and options presented in Exhibit 1-3. Note that this memo is intended to provide a general description of how the project might be constructed, allowing leeway through the design and contracting process for additional methods and approaches to be proposed.

Throughout Chapter 3, the term "alternatives" refers to the five Build Alternatives that require construction activities. The No Build Alternative is described in Chapter 2 and does not involve construction activities.

3.1 Construction Elements Common to All Alternatives

There are several construction elements common to all of the Alaskan Way Viaduct and Seawall alternatives and options. These common elements are discussed below.

3.1.1 Construction Assumptions

All estimated durations and sequencing of construction activities assume that construction could occur 24 hours a day, 7 days a week throughout the construction period. Continuous construction is proposed to minimize overall project costs and to shorten the time it takes to build the project.

In addition, this section assumes the following:

- Closures of SR 99 during off-peak traffic hours, such as nights and weekends, will be permissible.
- Closures of SR 99 for up to 2-week periods will be permissible.
- SR 99 summer closures for up to 10 weeks will be permitted between Pike Street and Denny Way (including the BST) for all alternatives except for the Rebuild.
- On SR 99, two lanes of traffic in each direction will be maintained during peak traffic hours or a comparable detour will be provided, except when closures are allowed as described in the bullets above.
- On the Alaskan Way surface street/E. Marginal Way, one lane of traffic in each direction will be maintained during construction or a comparable detour will be provided.

- Access to SR 99 at S. Royal Brougham Way and S. Atlantic Street will be maintained during periods when downtown access is closed.
- Access to the waterfront piers and businesses will be maintained during construction.
- The Waterfront Streetcar will be removed for the duration of construction and will be replaced as part of the surface street improvement work.

Although these are the working assumptions used to estimate construction costs and construction activity durations (for each alternative), it must be noted that as the engineering design is refined, and more information is known, further lane restrictions and/or long-term lane closures may be necessary.

3.1.2 Construction Staging Areas

Construction staging areas will be needed throughout the project area to provide adequate space for construction equipment, construction materials, materials stockpiling and transfer, parking, and other construction-related activities. Due to the size and complexity of the project and the lack of available land in the AWV Corridor, potential staging areas have only tentatively been identified. Proposed construction staging areas are similar for all alternatives, with some exceptions. A minimum of approximately 700,000 square feet of staging area will be required in the south end for temporary plant facilities, potential treatment facilities, shuttling of materials and equipment, and other contractor activities. The area needed could be met by a combination of one or more of the following proposed staging sites, listed by area.

South – S. Spokane Street to S. King Street

- A large single site is needed for construction staging area in the south.
- A portion of Terminal 46 may be used.
- A portion of Pier 48 uplands may be used. Rebuilding of the pier would be required if the pier is used as a staging site.

Central – S. King Street to Battery Street Tunnel

- Two sites could potentially serve as tie-up areas for construction barges.
- Four sites could potentially serve as vent building sites for the Tunnel and Bypass Tunnel Alternatives only. There is also a potential site for a new parking garage for all alternatives. One site will be needed in all alternatives for the BST west portal vent support building and construction staging.

- At Piers 56/57, existing docks could be used as temporary tie-up areas for construction barges.
- At least three sites are needed for construction right-of-way areas.

North Waterfront – Pike Street North to Broad Street

- A site between Wall and Vine Streets will be needed for construction right-of-way.

North – Battery Street Tunnel to Ward Street

- A Seattle Center parking lot has been proposed, but could only be used during non-event or non-peak activity times at the Seattle Center.
- A site for the BST east portal vent support building and construction staging. The site would be used in all alternatives (except the Rebuild Alternative).
- A site between Roy and Mercer Streets has potentially been identified for construction right-of-way for the Widened Mercer Underpass (for all alternatives except the Rebuild Alternative).
- A site just north of Thomas Street has been identified for construction right-of-way for the Thomas Street Bridge (needed for all alternatives except the Rebuild Alternative).

Construction staging areas may take up to 12 months to establish before major project construction activities begin.

An individual contractor may choose to lease additional staging areas; these additional staging areas would be left to the discretion of the contractor and are not analyzed as part of this project. The contractor for the project will be required to obtain approval from property owners and the project sponsors before any additional staging areas are established.

3.1.3 Construction Haul Routes

For all alternatives and options, trucks will most likely be the primary mode for transport of materials either into or out of the project area. The following truck haul routes are assumed to be the primary routes. However, the City and/or WSDOT will determine actual routes as part of final project design and project permitting.

- **South** – Project haul routes in the south will use existing established truck routes that use E. Marginal Way, SR 99, Michigan Street, S. Spokane Street, and I-5. The existing partial interchange between S. Spokane Street and SR 99 does not provide a westbound to northbound off-ramp nor a southbound to eastbound on-ramp, which means that most truck traffic will use Michigan Street to link I-5 and

SR 99/E. Marginal Way. When completed, SR 519 will provide a majority of the access to this section of the project area.

- **Central** – Truck access to the central section will be provided by established routes on the south and north. In addition to truck routes, this area of the project site may also use rail transport and barge transport. The BNSF railroad tracks emerge from the BNSF Tunnel at about Bell Street and proceed north. There are several areas where barge access could be provided.
- **North** – Project haul routes for construction in the north end have not yet been identified; however, established truck routes between I-5 and Elliott Avenue/15th Avenue will be used. Trucks will predominantly use Elliott Avenue for deliveries in the north end.

3.1.4 Types of Construction Equipment

Similar types of construction equipment will be used to build the different alternatives and options. All of the alternatives and options are expected to be constructed using diesel-powered equipment typically used for highway and roadway projects. These equipment types include but are not limited to:

- Back hoes and excavators
- Cranes
- Drilling rigs and augers (used to construct drilled shafts, piles, and soil improvements)
- Front loaders
- Pavement grinders and concrete pulverizers/hydraulic shears
- Pile drivers
- Jackhammers
- Hydromills
- Trucks
- Truck-mounted water filtration and treatment facilities
- Slurry processing equipment
- Settling ponds
- Grading equipment
- Concrete pumping equipment
- Compressors, generators, and pumps

Bypass or Tunnel Construction Steps

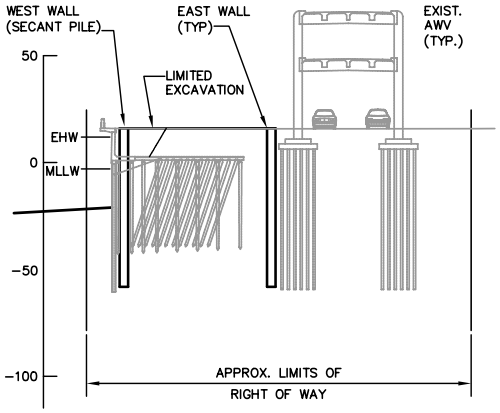

STEP 1 – EXCAVATE TUNNEL

1. REMOVE EXISTING TROLLEY TRACKS.
2. TEMPORARILY OR PERMANENTLY RELOCATE UTILITIES AS REQUIRED FOR SB TUNNEL EXCAVATION AND CONSTRUCTION.
3. DETOUR ALASKAN WAY TRAFFIC TO 1 LANE IN EACH DIRECTION UNDER EXISTING VIADUCT.
4. CONSTRUCT EAST WALL.
5. CONSTRUCT WEST WALL REPLACING SEAWALL IN SECTIONS ALONG ALIGNMENT.
   A. INSTALL SILT SCREEN OUTBOARD OF SEAWALL ADJACENT TO WORK ZONES.
   B. EXCAVATE ADJACENT TO AND IN STAGES ALONG SEAWALL TO TOP OF RELIEVING PLATFORM. TEMPORARILY BRACE EXISTING SEAWALL PANELS.
   C. PERFORM LIMITED GROUND IMPROVEMENT, DEWATERING AND TEMPORARY BRACING TO ENABLE INSTALLATION OF WEST DIAPHRAGM WALL.
   D. INSTALL WEST WALL.
   E. REMOVE EXISTING SEAWALL PANELS

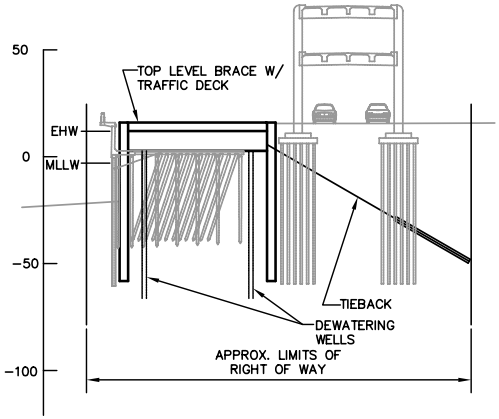

STEP 2 – EXCAVATE TUNNEL

1. EXCAVATE TO TOP OF RELIEVIING PLATORM THE FULL WIDTH OF TUNNEL.
2. INSTALL DEWATERING WELLS AND BEGIN DEWATERING.
3. INSTALL TOP LEVEL TIEBACKS.
4. INSTALL TOP LEVEL BRACING.
5. INSTALL TRAFFIC DECK WHERE REQUIRED TO MAINTAIN SURFACE TRAFFIC AND LOCAL ACCESS TO WATERFRONT.
6. BEGIN REMOVAL OF SEAWALL RELIEVING PLATFORM.

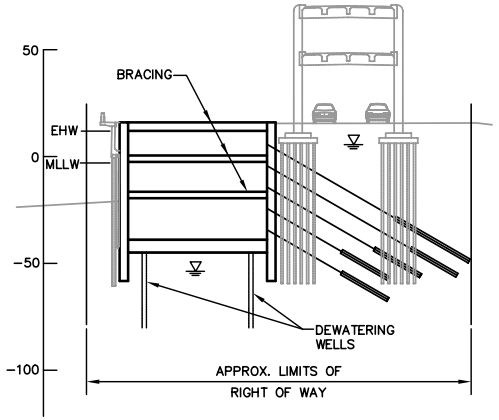

STEP 3 – EXCAVATE TUNNEL

1. EXCAVATE IN STAGES TO 2 FT. BELOW EACH TIEBACK OR BRACING LEVEL.
2. INSTALL TIEBACKS AND/OR STRUTS AT EACH LEVEL PRIOR TO EXCAVATION TO THE NEXT LEVEL.
3. MAINTAIN DEWATERING.
4. EXCAVATE IN STAGES TO THE BOTTOM OF TUNNEL.

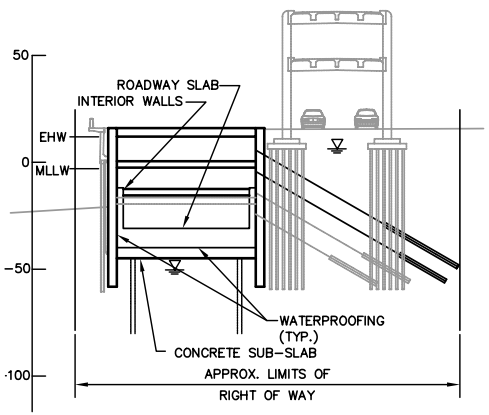

STEP 4 – CONSTRUCT TUNNEL

1. MAINTAIN DEWATERING
2. CONSTRUCT TUNNEL CONCRETE SUBSLAB.
3. INSTALL WATERPROOFING BELOW INVERT AND ON WALLS TO ABOVE THE ROADWAY SLAB.
4. CONSTRUCT INVERT AND ROADWAY SLAB.
5. REMOVE LOWER LEVEL BRACE.
6. DETENSION TIEBACKS IN LOWER ROWS.
7. INSTALL WATERPROOFING ON WALLS TO ABOVE TOP OF INTERIOR WALLS.
8. CONSTRUCT INTERIOR WALLS
9. INSTALL BRACING BETWEEN INTERIOR WALLS.

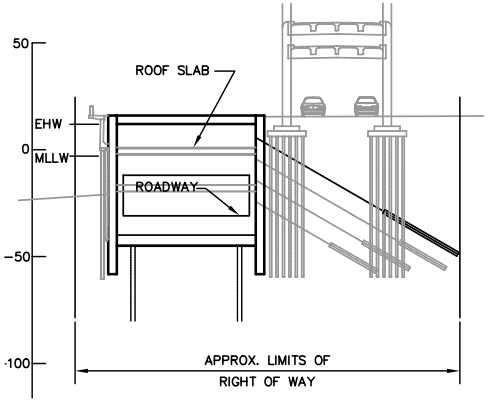

STEP 5 – CONSTRUCT TUNNEL

1. MAINTAIN DEWATERING
2. DETENSION SECOND ROW OF TIEBACKS AND INSTALL WALL WATERPROOFING TO ROOF LEVEL.
3. CONSTRUCT ROOF STRUCTURE.
4. INSTALL ROOF WATERPROOFING.
5. CONSTRUCT ROOF TOP SLAB.
6. REMOVE BRACING.
7. DISCONTINUE TUNNEL DEWATERING.

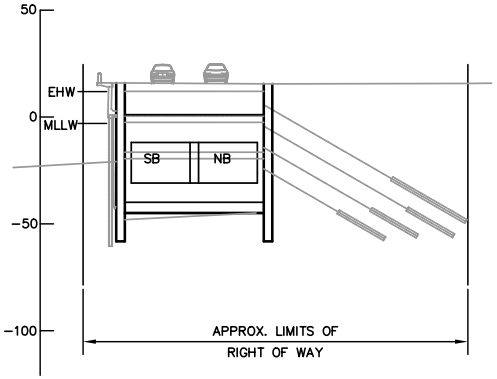

STEP 6 – CONSTRUCT TUNNEL

1. REMOVE TRAFFIC DECKING AND DETENSION UPPER ROW OF TIEBACKS.
2. BACKFILL ABOVE TUNNEL AND REMOVE TOP LEVEL BRACING. RELOCATE UTILITIES TO PERMANENT OR TEMPORARY LOCATIONS.
3. COMPLETE INSTALLATION OF SEAWALL CONCRETE FACIA PANELS, CANTILEVER SIDEWALK.
4. CONSTRUCT ALASKAN WAY SURFACE STREET ON TOP OF TUNNEL.
5. COMPLETE VENTILATION STRUCTURES. CONFIGURE VENTILATION, SYSTEMS, CONSTRUCT EGRESS STAIRS AND TUNNEL INTERIOR FINISHES.
6. SHIFT SR 99 TRAFFIC INTO TUNNEL, ALASKAN WAY SURFACE TRAFFIC TO ABOVE.
7. COMPLETE AERIAL CONNECTION TO BATTERY STREET TUNNEL THEN SHIFT TRAFFIC FROM EXISTING VIADUCT INTO SB TUNNEL.
8. REMOVE EXISTING AWV.

NOTE: BYPASS TUNNEL COMPLETE AT THIS STAGE.

All dimensions are in feet unless otherwise noted.

Exhibit 3-1

The size and quantity of equipment required will vary between alternatives. For example, more excavators would likely be used to construct the Tunnel and Bypass Tunnel Alternatives compared with the Rebuild, Aerial, or Surface Alternatives. In contrast, the Rebuild and Aerial Alternatives may require more cranes than the Tunnel, Bypass Tunnel, or Surface Alternatives.

In addition to equipment types listed above, it is possible that a conveyor belt system may be used as a mechanism to deliver the excavated material to the hauling units, such as trucks, railroad cars, or barges. The hauling units will transport the excavated material to approved storage sites or approved off-site disposal areas.

3.1.5 Utilities

An extensive network of utilities is located in the AWV Corridor. All of the alternatives will accommodate the utilities currently located in the AWV Corridor. However, their future locations may change from existing conditions. All of the alternatives require many utilities to be temporarily relocated for construction and moved again to their final locations. The locations for the temporary and permanent utility relocations vary between the alternatives. Below is a list of some general utilities design assumptions for the project:

- Utilities will be relocated the minimum number of times required through ongoing planning and coordination with the utilities agencies.
- Utilities that are in conflict with construction will be relocated to temporary locations prior to project construction.
- Relocating utilities to temporary locations prior to construction is anticipated to take approximately 18 months.
- Utilities that are temporarily relocated for construction activities will be moved into permanent locations once any conflicting construction activities are completed.
- Outfalls in conflict with construction will be protected in place.
- Pile supports for new or temporary utilities are not anticipated but may be required in final design.
- Most utilities in the project area are located underground and will remain underground in their new locations.
- Potential impacts to utilities as a result of soil improvement methods will be evaluated during the design process.

In addition, it is possible that some utilities will be upgraded during the relocation process, which would require further ongoing coordination with the utility providers during design and construction. Relocation of the

utilities will require close coordination among all utilities (both public and private agencies) involved to minimize the frequency and degree of disruption. Coordination efforts among agencies are being discussed and will continue throughout the project. For a fuller discussion of the design assumptions as well as greater detail regarding the coordination with utilities for construction activities, refer to Appendix O, Public Services and Utilities Technical Memorandum.

3.1.6 Colman Dock Ferry Terminal Access Road and Relocation of the Washington Street Boat Landing

The pier needed for access (from offsite ferry holding locations) to the Colman Dock Ferry Terminal and the relocation of the Washington Street Boat Landing will be built before major viaduct and seawall construction begins. The new pier will extend from the north edge of the Pier 48 uplands area over Elliott Bay to connect to the Colman Dock Ferry Terminal. A typical pier will be constructed by driving steel or precast concrete piles and by placing a precast or cast in place over water roadway deck on the piling. Silt curtains and/or other Best Management Practices will be used to minimize overall impacts to Elliott Bay and aquatic organisms.

3.1.7 Removal of the Alaskan Way Viaduct Structure

Under all of the proposed alternatives, the viaduct will be removed and demolished, except under the Rebuild Alternative, where the existing viaduct between Pike Street and the BST is retrofitted rather than rebuilt. The timing for removing the viaduct and the amount of material removed varies between plans; however, similar removal methods are anticipated.

In general, the viaduct will be demolished by using various methods of concrete removal, including saw cutting and lifting segments out of place, using concrete pulverizers and shears mounted on excavators, and/or using concrete splitters, jackhammers, or core drilling to break up concrete. Concrete from the viaduct could be ground into aggregate for reuse on site as part of the construction operation, or it could be hauled to an offsite location for processing. Rebar in the existing structure could be separated and recycled. The old viaduct material will be hauled away by truck, rail, or barge.

Depending upon the alternative, the quantity of concrete expected to be demolished and removed from the existing viaduct ranges from 80,000 to 110,000 cubic yards plus an additional 1,000 to 40,000 cubic yards of concrete removal from the temporary trestles, aerial structures, roadway slabs, and other existing concrete structures.

3.1.8 Construction Mitigation

The Alaskan Way Viaduct and Seawall Replacement Project will be a major construction project that will change the landscape of the project corridor for 7.5 to 11 years depending on the alternative selected. It is understood that the construction impacts that will occur (such as parking loss; changes in access and mobility in the area; and noise, dust, and general disruption in circulation patterns), both in the short-term for particular construction segments and in the long-term for the corridor, will have to be mitigated.

Given the construction assumptions described above in Section 3.1.1, particularly for continuous construction necessary to bring the replacement of the viaduct and seawall into place in a reasonable time frame relative to the service life of the existing viaduct and seawall, critical trade-off decisions will be required. These decisions include basic trade-offs between intense continuous construction (which is necessary to complete the project as efficiently as possible, but can be disruptive and problematic while occurring), or a more moderate pace of construction (e.g., with nighttime slowdowns or closures) with discontinuous construction activities that would continue for many more years. Corresponding with an extended construction period are substantially increased costs over time due to inflation.

The project is now only at a preliminary level of design, which means it is too early to define specifically the mitigation measures for each area of impact. Potential mitigation measures have been identified, however, and are described below, including the Flexible Transportation Package construction mitigation strategies described briefly in Section 2.2.1 under Elements Common to all Build Alternatives.

Economic Effects

Business owners in the central waterfront and Pioneer Square, along with other retail areas along the corridor, may experience economic effects due to impacts that have been identified as:

- Parking loss
- Access
- Noise
- Dust

Potential mitigation strategies to maintain access to businesses include:

- Providing walkways.
- Providing access through construction barriers.
- Maintaining service delivery access (truck deliveries may be more difficult due to altered routes and surface street congestion).
- Maintaining emergency vehicle access.

For potential downturn in business activity, mitigation measures could include the following measures:

- Coordinate construction with businesses to consider hourly, weekly, or seasonal variations in business activity (some business needs in an area may contradict other adjacent business needs).
- Commit staff to community outreach (i.e., a project construction ombudsman) to process complaints and neighborhood issues.
- Contribute funds to the Downtown Services Association (DSA) or other downtown business/community organizations to distribute public information (such as flyers, signage, a website, marketing campaigns) to promote visiting downtown, Pioneer Square, Pike Place Market, the central waterfront, and Belltown during construction.
- Provide project staff with the authority to curtail or shut down construction work that does not meet standards or is outside permitting conditions.
- Facilitate assistance for small businesses to access small business loan programs that are already in place; or refer to programs that can provide small businesses with technical assistance to apply for subsidized or lower-interest loans than would be available through regular banks or lending services.

Parking Loss Mitigation

Loss of short-term parking for the Pioneer Square and central waterfront (two distinct areas) will be mitigated. Possible mitigation includes the following measures (which could also be combined):

- Build a parking structure.
- Lease existing parking lots or structures.
- Acquire existing parking lots or structures.
- Contract for replacement parking.
- Convert existing long-term parking to short-term parking.
- Provide off-site parking with shuttle service.

Utilities

Mitigation for utilities relocations could include the following measures:

- Provide noise shielding on equipment, silence mufflers, etc.
- Schedule maintenance activities and less noisy construction activities at night.
- Provide a 24-hour noise complaint hotline or website.

- Seattle City Light (electric power) and Seattle Public Utilities (water utilities) will coordinate closely on planned outages to minimize the frequency and extent of impacts of utility disruptions.
- Seattle City Light and Seattle Public Utilities would like to consider any additional potential mitigation measures for outages on a case-by-case basis.
- Contract specifications can specify contractor contingency response plans for unplanned outages, such as stand-by crews to minimize risks of large area outages if line is cut during construction.
- Contract specifications can specify that a generator must be supplied if electrical power cannot be cut off for a particular critical use (to be decided on a case-by-case basis).

Also relating to utilities impacts in the Pioneer Square area are cast-iron water pipes in below-surface areaways (particularly in the First Avenue area) that are susceptible to cracking or breaking from potential vibration impacts that could result from an increase in heavy traffic along First Avenue (including an increase in trucks).

Mitigation for this could include the following measures:

- Monitor areaway pipes during construction for pipe cracking/breaking.
- Cast-iron water pipes could be replaced with steel pipes if particular areas of the areaways are identified as at greater risk for impacts.
- A survey of utilities in the area could be directed to add a more specific examination of the water lines in the Pioneer Square areaways for existing cracks and other vulnerabilities.

Seattle Aquarium

Certain aquatic mammal species known to be particularly sensitive to noise, vibration, night light, etc. may have to be relocated during construction near the Aquarium location. The Aquarium facility also has a critical need to have uninterrupted water and electricity supply.

Noise

To reduce construction noise at nearby receptors, mitigation measures such as the following could be incorporated into construction plans, contractor specifications, or permit variance conditions:

- Develop a construction noise management and monitoring plan that establishes specific noise levels that may not be exceeded by the contractor for various activities during specific time periods. This would establish a set of noise limits that could be met by the contractor while still protecting the public from excessive noise impacts.

- Construct temporary noise barriers or curtains around stationary equipment and long-term work areas that must be located close to residences and nearby sensitive receptors. This could reduce equipment noise by 5 to 10 dBA.
- Limit the noisiest construction activities to between 7 a.m. and 10 p.m. on weekdays and between 9 a.m. and 10 p.m. on weekends to reduce construction noise levels during sensitive nighttime hours.
- Equip construction equipment engines with adequate mufflers, intake silencers, and engine enclosures; this could reduce their noise by 5 to 10 dBA (USEPA 1971).
- Use the quietest equipment available; this could reduce noise by 5 to 10 dBA.
- Require contractors to use OSHA-approved backup alarms that sense ambient sound levels; this could reduce disturbances to nearby residents from backup alarms during quieter periods.
- Turn off construction equipment during prolonged periods of non-use; this could eliminate noise from construction equipment during those periods.
- Require contractors to maintain all equipment and train their equipment operators; this could reduce noise levels and increase operational efficiency. Out-of-specification mufflers can increase equipment noise by 10 to 20 dBA.
- Where possible, locate stationary equipment away from sensitive receiving properties.
- Create and support neighborhood advisory groups for key construction impact areas.
- Along with the neighborhood advisory group strategy, provide community contacts with phone numbers or e-mail addresses.
- Notify nearby residents prior to periods of intense nighttime construction.
- Where amenable, provide heavy window coverings or other soundproofing material on adjacent buildings with nighttime noise-sensitive uses (although funding sources for these measures have not yet been identified).

Transportation

Some of the construction mitigation measures relate to traffic congestion in the construction areas and on surrounding surface arterials. Some relate to ensuring that large public events at the two major sports stadiums and Exhibition Hall in the south end remain accessible, and also for large public event venues at and around the Seattle Center area.

These potential mitigation strategies include the following:

- Implement event management similar to that used for Husky Stadium games.
- Keep Alaskan Way open with as many lanes as possible 2 hours before and after games and events.
- Coordinate construction activities.
- Modify traffic operations in the area on game days.
- Hire off-duty police to keep traffic moving in the event areas.
- Provide extra buses connecting to off-site parking.
- Keep freight travel moving.
- Work with BNSF and Union Pacific railroads to minimize construction impacts to rail yard operations.
- Maintain freight truck access to and from Port of Seattle container cargo terminals, particularly Terminal 46 in the immediate AWV Corridor.

Flexible Transportation Program Construction Mitigation Strategies

The following section provides a summary of the flexible transportation program strategies selected to be implemented for all five Build Alternatives. The emphasis of these strategies will be to help mitigate traffic congestion during construction. Further work during the development of the preferred alternative will be required to better define the role and function of these strategies.

Construction Worker/Commuter Shuttle Service

This measure would provide worker and commuter shuttle service from outlying temporary or permanent parking facilities into the work zone area. The project would help to reduce directly the number of vehicles that enter a highly constrained work area. Cost includes transit service and long-term leased parking. Parking areas in the vicinity of Seattle Center, Interbay, the stadiums, and points further south would be considered as potential temporary parking locations.

Expansion of FlexPass Program During Construction

FlexPass is a comprehensive commute benefits package for all or most employees in a worksite, activity center, or residential area. Generally, FlexPasses are distributed to all eligible users for a reduced rate, and the employer or sponsor is billed based on the actual amount of use charged to the FlexPass. Since ridership and therefore farebox revenue increases, the transit agency usually subsidizes the incremental cost to the sponsor in the first years of implementation. This strategy, along with increased transit

service, will provide increased incentives for commuters to choose transit during construction. To support a strong increase in transit use during construction, this program provides a higher than typical subsidy that is stepped down over a period of years.

Personalized Transportation Consultation

Personalized transportation consultation brings marketing and trip planning services to the neighborhood. Outreach is targeted to households in primary markets served by the AWV Corridor. Marketing staff members canvass a neighborhood in the market area, providing one-on-one meetings to educate residents on the transportation options and to tailor solutions specific to the needs of the households. This program is well suited to services such as the formation of vanpools within a neighborhood. Personalized transportation consultation has particular application during construction when residents' typical travel patterns may be disrupted.

Personalized transportation consultation fills a gap in typical marketing and support services by focusing on the home end rather than just the work end of the trip. It also can be highly effective in extending the reach of existing efforts because it addresses both work and non-work trips.

Traveler Information Systems

Extensive traveler information and support during construction periods will be featured as part of this program. This program will focus on the technological needs of getting the word out on construction activities and general transportation system operating conditions. This includes systems such as dynamic message signs, highway advisory radio, e-mail alerts, and project websites that provide real-time information on traffic conditions around construction areas. Hardware and software systems developed for this strategy can be used beyond the construction period, though operations and maintenance funding will need to be secured from non-AWV project sources.

Conversion of Long-Term Downtown Commuter Parking to Short-Term and Carpool Parking

Replacement of the Alaskan Way Viaduct will require the closure of a significant number of metered (short-term) parking stalls along the Seattle waterfront, where short-term parking is always in demand to serve business users and waterfront visitors. The program assumes these parking stalls will be replaced in some future configuration that conforms to the final waterfront surface street improvement plan.

This strategy will lease long-term parking stalls in the immediate vicinity of the project and convert them to short-term only. By instituting a program

whereby long-term parking is converted to short-term (like the current metered parking), customers for waterfront businesses will still have available parking and the reduction of long-term parking will serve as an inducement for commuters to switch to alternative modes to get to and from work. While this project will not make up the entire shortfall of parking during construction, it can help to reduce corridor long-term parking demand. Further analysis during the development of the preferred alternative will be needed to better estimate the effectiveness of this strategy.

Implementation of Truck/Commercial Vehicle Restrictions and Prioritizations

This strategy would implement time prohibitions for truck and/or commercial vehicle operations around construction work zones or congested corridors affected by construction activity. This would also include trucks and commercial vehicles supplying construction materials to specific work sites if traffic demands warrant this treatment.

Event Management System

Event management systems address congestion and delays that result from activities at Seattle Center, sports stadiums in the Pioneer Square/SODO neighborhoods, and events at the Seahawks Stadium Exhibition Center. The project supports these strategies by providing for an event management server to coordinate traffic signal control and route guidance and by supporting special event shuttle service. Signs and other system capital equipment developed for this strategy can be used beyond the construction period, though operations and maintenance funding will need to be secured from non-AWV project sources.

Smart Work Zones

These systems apply the use of video, signaling, and traffic technologies that provide a portable traffic management system to help make travel through the roadway construction zones safer and more efficient. This system would also include the application of variable speed limit signs to better manage traffic flow in the immediate vicinity of or upstream/downstream from construction zones.

Enhanced Traffic Signal Systems and Programs

Traffic signal system enhancements, such as updated traffic signal plans (Quick Response), adaptive signal control, signal optimization systems, and traffic operations center upgrades, will help improve traffic flow on nearby streets during construction. These programs address the broader downtown street traffic signal systems network affected indirectly by construction impacts, in comparison to the Smart Work Zone systems that help manage traffic in the immediate vicinity of major project work sites.

Incident Management Systems

Incident management systems are planned and coordinated strategies to detect, respond to, and remove traffic incidents and restore traffic capacity as safely and quickly as possible. Typically, incident management systems include programs to detect incidents and to clear them from the roadway quickly. The process involves a number of public and private sector partners, including law enforcement, fire and rescue, emergency medical services, transportation, public safety communications, emergency management, towing and recover services, hazardous materials contractors, and traffic information media. This program would enhance existing systems and strategies by including project construction activities to address incident response needs.

This program should also address non-traffic-related incidents around construction zones to facilitate safe and efficient responses. In addition to the stakeholders mentioned above, other stakeholders affected by non-traffic incidents (such as utility infrastructure accidents) should be included in planning and coordinating activities.

Direct Transit Enhancements, Including Possible Water Taxi Service

Based on City and regional policies, transit person trip demand is expected to grow significantly in the greater downtown Seattle area. Many transportation demand and system management strategies recommended for the Alaskan Way Viaduct and Seawall Replacement Project require adequate transit service to meet the expected growth in transit demand. However, recent trends in revenue for transit service, if carried out to the future, may not be adequate to meet this demand.

To address this need, the project will contribute a significant allocation of enhancement funding to help address primarily transit service (service hours) needs during the construction period. Specific options on how the funding would be used are not known at this time and could be identified during the development of the preferred alternative.

Expand Vanpool/VanShare Program

Vanpools are effective for serving secondary destinations such as South Lake Union, the Ballard industrial area, Harbor Island, and other non-Central Business District destinations, which are not easily accessible by transit to the entire region. A VanShare program provides vans to commuters to link their work site or home to a transportation terminal such as a train station, park-and-ride lot, or ferry terminal. The project envisions a significant increase in vanpools in the AWV Corridor over the 2030 planning horizon for a total increase of 128 vanpools (70 percent of which would be put in place during the construction period). The project provides the capital cost for initial

purchase and replacement of vans throughout the planning period. Operating costs are borne by the users. The AWV project's share of the total capital cost is assumed to be 25 percent (the viaduct's approximate share of traffic entering the downtown). Operating funds are also provided to establish a VanShare program during construction.

Small Employer Market Development

The Small Employer Market Development strategy extends the travel choices, marketing, and support services enjoyed by Commute Trip Reduction affected employers to employers with less than 100 employees. These smaller employers represent approximately two-thirds of the employees in the downtown based on recent estimates. This program provides for aggressive marketing during construction.

Parking Lot Guidance Systems

This system automatically monitors parking lot availability and uses dynamic message signs to disseminate information to drivers so that they can go directly to parking lots with available parking. With information about parking lot availability, travelers will not have to needlessly search for parking, thus reducing the demand on congested roadways.

Flexible Transportation Program Management and Monitoring/Demonstration and Research Programs

This effort is required to help manage the different array of flexible transportation programs implemented during the project construction period. It is imperative that programs be monitored to provide important feedback. This feedback will help program managers and decision makers determine which programs are not meeting performance targets and make modifications, or terminate ineffective programs, if necessary. Feedback can also identify effective programs that may be considered for expansion. A portion of project resources are set aside for demonstration projects on new and innovative strategies that can help to meet and exceed project performance objectives. This effort can be valuable in determining the most cost-effective approaches to meeting the changing mobility needs of persons and goods in the corridor and the travel markets it serves.

Other Flexible Transportation Strategy Options for Further Consideration During Development of the Preferred Alternative

Other strategies that show promise for effective construction mitigation are noted below. These strategies will require more detailed analysis and agency consultation during the development of the preferred alternative to determine their best configuration during the construction period.

Transit Priority Measures

If traffic accessing or exiting the AWV Corridor during construction causes congestion on adjacent streets, transit vehicles using those ramps will be affected. If delays to transit can be mitigated through transit priority measures without adversely affecting other traffic, delays to transit riders will be reduced and the attractiveness of transit will be enhanced. Specific transit priority measures (e.g., transit signal priority systems, queue bypass and transit only lanes) will need to be defined on a site-specific basis, considering the extent of transit use, impacts assessment of arterial traffic conditions due to the project, and the feasibility of implementing an effective solution.

Ramp Metering

Metering helps to moderate the rate of traffic growth leading into the peak travel periods or during heavy construction where roadway capacity is more limited, thereby allowing a high volume of traffic flow to be maintained during a greater portion of the peak period. It also increases the spacing between vehicles merging into the traffic stream, which allows for safe merging and reduced accident rates at merge points. This measure would install ramp meters and related surveillance, detection, and communication devices. Ramp meters would not be turned on unless traffic volumes approach congested conditions and they meet WSDOT and City of Seattle operations requirements.

3.2 Rebuild Alternative

Construction activities for this alternative are described below. There are no options proposed with the Rebuild Alternative.

3.2.1 South – S. Spokane Street to S. King Street

SR 99 At-Grade With SR 519 Elevated Access Ramps

SR 99 Roadway – At-Grade

With this alternative, SR 99 will be an at-grade (surface) facility. Construction of the roadway surface will involve removing the existing viaduct and replacing it with a surface roadway. Construction methods will include clearing, grading, laying the aggregate roadway foundation, and constructing the roadway pavement.

SR 519 Connection – Elevated Ramps at S. Atlantic Street and S. Royal Brougham Way

Under the Rebuild Alternative, aerial ramps with retained fill sections will be constructed to provide full access to SR 519 near Safeco Field and Seahawks Stadium.

Retained fill sections will be constructed to transition between the at-grade SR 519 roadway and the SR 519 aerial ramps. Aerial ramps will be constructed with drilled shafts, cast-in-place concrete columns, and box girders.[4] Most of the concrete for the aerial structures will be cast-in-place. However, pre-cast components (such as pre-cast, pre-stressed girders) could be used.

Drilled Shaft Construction Description

The aerial ramp structures will be supported by drilled shafts, which will vary in diameter from 8 to 14 feet and will extend 100 to 150 feet into the soil, as shown above.

In general, the basic procedure for constructing drilled shafts is as follows:

- Where required, a temporary steel casing will be installed while drilling (augering) out the hole to provide temporary support of the hole as it is drilled out. The soil conditions and stability normally determine the length of the shaft that requires a temporary steel casing, but generally, the top 25 to 30 percent of the shaft length may be cased.
- As the drilling operation advances beyond the bottom of the temporary casing, a sealing slurry or water will be pumped into the drilled shaft to maintain the stability of the excavated hole below the casing and to offset seepage of groundwater.
- Once the hole is drilled, a rebar cage is installed.
- The excavated hole will be filled with concrete using a tremie[5] or concrete pump. This will displace the slurry or water. Slurry, if used, will be recycled through a de-sander and reused. Water, if used, will be collected and treated as needed, prior to disposal. The temporary casing will be removed during concrete placement.

Soil Improvements

Soil (or ground) improvements will be required in the south where aerial structures and retained fills are proposed. Ground improvement will be

[4] Box girders are support beams commonly used in bridge construction to span between column supports.

[5] A tremie is a pipe or tube often used to place concrete within confined spaces and under water.

performed in and around portions of the fill embankments and foundations for the SR 519 overcrossing. Ground improvement could consist of a combination of deep soil mixing, jet grouting, and vibro-replacement (stone columns).

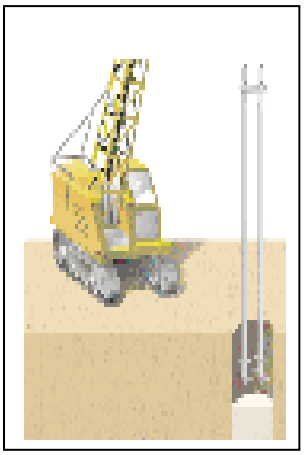

Deep Soil Mixing

It is anticipated that soils in the south will be improved using a process called deep soil mixing. During later stages of design of the project, potential impacts resulting from the soil improvements to the existing or relocated utilities will be evaluated.

Deep soil mixing is an in-situ soil mixing technology that mixes existing soil with cement grout using mixing shafts consisting of auger cutting heads, discontinuous auger flights, and mixing paddles. The mixing equipment varies from single- to eight-shaft configurations depending on the purpose of the deep mixing. As the augers are advanced into the ground, a cement grout is injected under pressure into the soil through the hollow-stem augers. The auger penetrates and breaks the soil loose and lifts it to the mixing blades, which blend the soil and cement grout. As the augers continue to advance, additional mixing blades remix the soil and slurry. Individual columns are constructed in an overlapping manner to create continuous zones of improved soil (Parsons Brinckerhoff 2003b).

The deep soil mixing operation creates spoils, equal to about 25 to 30 percent of the volume of soil treated, that are a mixture of grout and soil. Spoils may be stockpiled on-site and periodically hauled away for off-site disposal at an approved disposal site. Deep soil mixing operations will not produce large vibrations.

Vibro-replacement is another method of ground improvement that may be performed in areas where adequate overhead room and equipment room is available. Vibro-replacement is commonly referred to as stone columns. Stone columns are constructed of compacted stone that are used to reinforce and densify the in-situ soil, thereby reducing liquefaction potential. Stone column construction is accomplished by downhole vibratory methods using a vibratory probe that penetrates the ground, either under its own weight or aided by water jetting. Vibrations are generated close to the tip of the probe and emanate radially away from it. Stone backfill is introduced in controlled lifts, either from the surface down the annulus created by penetration of the probe (top feed) or through feeder tubes directed to the tip of the probe (bottom feed). Compaction of the stone backfill forces the stone radially into the surrounding in-situ soil, forming a stone column that is tightly interlocked

with the soil. The stone column and in situ soil will form an integrated system with higher shear strength, lower compressibility, and lower susceptibility to liquefaction than the untreated soil.

Soil improvements for the Rebuild Alternative are planned from just south of S. Atlantic Street to just north of S. Royal Brougham Way. The footprint of the soil improvements ranges from 50 to 100 feet wide and extends approximately 70 feet below the ground surface.

Changes to BNSF SIG Rail Yard, Whatcom Rail Yard, and BNSF Tail Track

Under this alternative, the Whatcom Rail Yard will be removed and the BNSF SIG Rail Yard will be expanded and reconfigured to include the relocated Whatcom Rail Yard tracks.

In addition, the BNSF tail track will be relocated from its planned location on Terminal 46 to the east side of SR 99. Once constructed, the tail track will extend from the reconfigured BNSF SIG Rail Yard to just south of Railroad Way S.

Removal of the Whatcom Rail Yard, portions of the existing BNSF SIG Rail Yard, and the existing tail track will include removing the existing railroad ballast, creosote rail ties, and steel rails and minor grading. The excavated materials from track removal activities will be reused to the extent practicable; however, it is assumed that most of this material will be removed, disposed of at an appropriate facility, and replaced.

Typical excavation methods and earthmoving equipment will be used to remove and replace the rail materials. Excavated materials and new railroad ties, ballast, and rails will be transported to and from the site via trucks, rail, and/or barges.

3.2.2 Central – S. King Street to Battery Street Tunnel

Rebuild Viaduct

In the central project area, the Rebuild Alternative involves both rebuilding and retrofitting[6] the existing viaduct in its existing location while keeping it open to traffic. The double-level viaduct will be completely rebuilt from S. King Street to about Pike Street. The single-level viaduct between Pike Street

[6] The term *rebuild* is used to describe areas of the double-level viaduct that will be reconstructed in-place. In these areas, the existing viaduct components and structures will mostly be replaced with new structures and components. The term *retrofit* is used to describe areas where the existing single-level structures will be strengthened by adding supports such as columns and steel jackets.

and the BST will be retrofitted. The existing ramps at Columbia and Seneca Streets will also be retrofitted.

Construction methods used for the viaduct in the central area are described below.

Rebuild S. King Street to Union Street

From S. King Street to Union Street, the existing double-level viaduct will be entirely rebuilt in its existing location while being open to traffic. This could be accomplished by supporting the existing viaduct with a temporary framework of steel columns and beams in a sequence of stages of temporary support and reconstruction. Once the viaduct is supported and braced temporarily, the entire structure and its components will be removed and replaced in stages in order to maintain SR 99 traffic on the viaduct. The new components will include piles, pile caps, columns, crossbeams, longitudinal girders, and roadway decking.

Rebuilding the Foundation

The foundation of the viaduct will be rebuilt by replacing the existing piles and footings (or pile caps). The existing superstructure (roadway girders and deck) of the double-level structure will be supported on temporary piers placed on each side of each existing pier, which will allow the existing column, footing (pile cap), and pile to be removed. After the existing pier and piles are removed, the new footing can be excavated to the bottom of footing elevation. Once the footing excavation is completed, the piling can be installed.

Driven Piling

The piles may be made of various materials, but at this time, the anticipated pile for this project will use hollow steel casing (pipe) with or without an end bearing steel plate welded onto the tip. The steel casing will be driven to the designated tip elevation or bearing capacity.

- When a pile tip is used, the pile casing provides a dry, clean 30-inch-diameter hole, which will be filled with reinforced concrete.
- Without a pile tip, the pile casing is driven open-ended. Drilling or augering will remove the soil material within the driven pile casing. The bottom of the empty casing is filled with concrete to create an impervious plug or tip so that potential water may be pumped out to provide a dry 30-inch-diameter hole, which will be filled with reinforced concrete.

Preliminary designs indicate that 30-inch-diameter piling will support each new footing.[7] Note that the final construction approach, materials, sizes, and quantities may vary depending on final design specifications.

The number and size of piles needed and the size of the pile caps will depend upon the size and layout of the bent[8] structure. The piles will be constructed to a depth 80 to 100 feet below the bottom of each footing. Typically, two footings support each bent, and the bents are longitudinally spaced 60 to 80 feet apart. In transition sections, there are typically three footings to each bent. The number of 30-inch support piles will increase proportionately with the bent size to adequately support the loading requirements.

Footings (Pile Caps)

It is anticipated that all reinforced concrete footings would be supported by driven piles as described above.

Typically, the excavation will be several feet larger in width and length than the concrete footing to allow for concrete forming and will extend to the depth required. These excavations are relatively shallow, and it is anticipated that the sides of the excavation will be sloped to provide stability. If local support of adjacent structures is needed, then a shoring system, additional ground improvements, or a combination may be installed outside the excavation limits.

Appendix W, Alternatives and Options Drawings, Exhibit R-11 shows the typical double-level viaduct structure and foundation (piles and pile caps/footings) for the Rebuild Alternative.

Rebuilding the Aboveground Viaduct

In addition to replacing the foundations, the bent structures, upper and lower supporting crossbeams, and roadway decking will be replaced or strengthened. Again, it is anticipated that most of the new viaduct components will be constructed of cast-in-place concrete while the components of the existing structure are temporarily supported.

Ramps at Columbia and Seneca Streets

Anticipated retrofitting activities for the Columbia and Seneca Street ramps are shown below. Foundation improvements include adding additional piling and enlarging the existing footings. In addition to enlarging the

[7] The size of the piles is based on preliminary design. Final pile sizes may vary based on final design.

[8] A bent is the transverse structure that supports the elevated roadway crossbeam and deck; it includes the piling, footing, columns, and crossbeam.

foundations, the existing columns will be retrofitted with new steel jackets. The concrete beams will be strengthened and widened, whereas the bridge decking and traffic railing will be replaced.

Retrofit Connection From Pike Street to the Battery Street Tunnel

There are several different structural configurations in the single-level structures composing the viaduct from Pike Street to the BST. Many of these structure types were described in Chapter 2. Most spans of these structures are made of cast-in-place reinforced concrete; however, there are several existing spans, either above or adjacent to the BNSF railroad tracks (from Stewart to Virginia), that are constructed with structural steel columns and girders.

With the Rebuild Alternative, the existing single-level structures (including the ramps) from Pike Street to the BST will be strengthened. That means that the existing structures will be supported by additional columns, steel jackets, strengthened girders, and improved foundations to meet current structural requirements. In addition, the existing decking will be removed and replaced as part of the retrofit.

Ramps at Western, Elliott, and Battery

Under the Rebuild Alternative, the existing ramps at Western Avenue, Elliott Avenue, and Battery Street will be rebuilt using the methods described above. The southbound on-ramp from Elliott Avenue and the northbound off-ramp to Western Avenue will be reopened to public traffic. Once rebuilt, the ramps to and from the BST will be closed to general traffic and open for use only by emergency vehicles. Appendix W, Alternatives and Options Drawings, Exhibit R-7 shows the ramp configuration at Western and Elliott Avenues.

Alaskan Way Surface Street

The Alaskan Way surface street between S. Holgate Street and Pike Street will be relocated to a temporary street (one lane in each direction) under the existing viaduct during the seawall construction. Once seawall construction is complete, a permanent Alaskan Way surface street will be constructed above the seawall (typically two lanes in each direction) using methods previously described. At the end of the project construction, the existing streetcar tracks will be replaced, and surface improvements (such as sidewalks, surface roadways, and related urban improvements) will be completed.

3.2.3 North Waterfront – Pike Street to Myrtle Edwards Park

In the north waterfront, the Rebuild Alternative proposes to rebuild the seawall and reconstruct the Alaskan Way surface street above the rebuilt seawall. Section 3.2.5 describes seawall construction. Alaskan Way surface street construction is described below.

Alaskan Way Surface Street

The Alaskan Way surface street will be temporarily relocated above the removed streetcar tracks, with one lane in each direction while the seawall is being rebuilt above the removed streetcar tracks. Surface street traffic will be shifted to the east to allow the seawall to be rebuilt. After the seawall is rebuilt, the permanent Alaskan Way surface street (two lanes in each direction) will be constructed above the rebuilt seawall, generally in its existing location. The existing streetcar tracks will be replaced and surface improvements will be completed.

Detours

There are no proposed SR 99 detour routes in this section of the project during construction. The Rebuild Alternative will maintain SR 99 traffic on the viaduct throughout construction, except as noted in Section 3.1.1, Construction Assumptions.

3.2.4 North – Battery Street Tunnel to Ward Street

For the Rebuild Alternative, there are no planned construction activities north of the BST.

3.2.5 Seawall – S. King Street to Myrtle Edwards Park

Replacing the seawall is a critical project element and it is incorporated into all of the proposed alternatives. Under the Rebuild Alternative, the seawall will be rebuilt as described below.

Rebuilt Seawall

The seawall will be replaced by strengthening existing weak soils through the jet grouting methods and potentially adding drilled shafts behind the existing seawall as needed. Potential risks associated with jet grouting are addressed in greater detail in Appendix T, Geology and Soils Technical Memorandum.

Jet Grouting

Jet grouting is one of the methods being considered to strengthen the soils behind the existing seawall[9]. This is a process by which cement grout is injected into weak soils and then mixed to strengthen and stabilize the soil. Jet grouting will create a solid block of improved soil behind the existing seawall that is imbedded into the competent soil layer of glacial till that underlies the waterfront area.

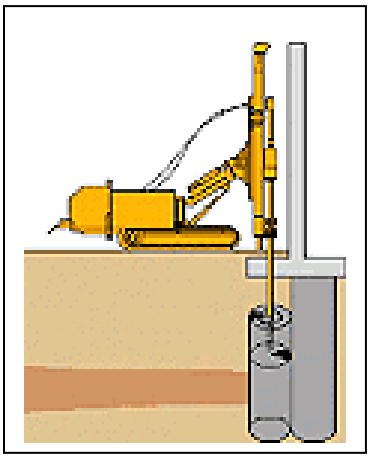

Jet Grouting

Like deep soil mixing (Section 3.2.1), jet grouting results in the creation of a spoil material composed of water, soil, and the grout material. Jet grout spoils are much more fluid than spoils from deep soil mixing. A method commonly used to manage the more fluid spoil material is to create a series of two or three impermeable membrane-lined settling ponds in the construction area. The fluid will flow through the ponds, where the solids will settle out. The solids will then be removed with an excavator, loaded into a truck (or rail car), tested for disposal, and hauled to an appropriate disposal site. The fluids will be kept in either the membrane-lined settling ponds or large tanks prior to reusing the fluids to create more jet grout. However, once the jet grouting is finished, the remaining fluid will be hauled off-site by truck, treated, and disposed at an appropriate facility.

As a result of the pressure and fluidity of the jet grouting material, the existing utilities may be affected through grout infiltration, perimeter disturbance, vibrations, and settlement.

Drilled Shafts

Drilled shafts, if needed, would be drilled through the area of soil improvement and intermittently spaced in a line parallel to the seawall face. Whether drilled shafts would be used and the necessary spacing will be determined through further soil investigations and through further engineering design study. Drilled shafts may also provide the support for the new seawall facade.

[9] Jet grouting is the anticipated soil improvement method; however, it is possible that other methods, such as deep soil mixing, would be used in some locations.

Construction Approach for Pier 48 Bulkhead From S. King Street to S. Washington Street

There is a small section of seawall in the area between S. King Street and S. Washington Street (Pier 48) that will be replaced. The seawall in this area consists of an existing steel sheet pile wall. Jet grouting will occur behind the sheet pile wall, and drilled shafts will be added, as necessary. Once completed, the existing sheet pile wall will be removed. It is anticipated that a silt curtain will be used as a Best Management Practice (BMP) to protect Elliott Bay water quality during this construction.

Construction Approach for Pile-Supported Gravity Seawall

The Pile-Supported Gravity Seawall extends from approximately S. Washington Street to Madison Street. In this area, most of the construction to rebuild the seawall will take place behind the existing seawall. After jet grouting is completed behind the existing seawall, top portions of the unreinforced concrete gravity wall will be removed and replaced with sloping riprap material to create additional water surface area. A silt curtain will be used as a BMP to protect Elliott Bay water quality during this construction.

Construction Approach for Type B Seawall

The rebuild of the Type B Seawall applies to the seawall portion between Madison Street and Union Street. The soils behind the seawall will be strengthened through jet grouting. If needed, drilled shafts will be constructed directly behind the existing seawall. The existing exposed sheet pile wall will be removed by cutting it off at the mudline and replacing it with a new reinforced concrete face. A silt curtain is the most likely BMP to be used to protect water quality during Type B Seawall construction.

Construction Approach for Type A Seawall

The Type A Seawall rebuild applies to the seawall portion between Union Street and Myrtle Edwards Park. The Type A Seawall replacement will be similar to the description for the Type B Seawall. However, the existing seawall components, including the existing facing, will not be removed and will be connected to the new seawall structure.

3.3 Aerial Alternative

Construction activities for the Aerial Alternative and its options are described below. The Aerial Alternative includes replacing the existing viaduct with a new aerial (viaduct) structure that is located generally along the same alignment as the existing viaduct.

3.3.1 South – S. Spokane Street to S. King Street

Stacked Aerial With SR 519 Full Access At-Grade

The permanent SR 99 will be a stacked (double-level) aerial structure that is in the general footprint of the existing viaduct, except for the area between S. Holgate Street and S. Royal Brougham Way, where the new stacked aerial structure lies completely west of the existing viaduct.

SR 99 Roadway – Stacked Aerial

The stacked aerial structure for SR 99 will consist of cast-in-place columns, crossbeams, and superstructure supported by either drilled shafts or concrete piles with footings (pile caps). Piles with footing foundations will be used to support structures south of S. Atlantic Street, where the depth to suitable load-bearing soils equals or exceeds 200 feet. The piles will be made of either steel or concrete and will extend into the suitable load-bearing soils.

The preliminary designs anticipate that the single column pile caps may be supported on 24 piles, whereas a total of 32 piles may be required to support one continuous footing that supports two columns. Some piers may require three or more columns, which would significantly increase the number of piles needed for those piers. Footings may vary in size depending upon the number of columns and piles required. Note that the following sizes of the piles and pile caps are preliminary, and final sizes may vary when determined during the final design.

- Single column footings – 44 feet by 30 feet by 8 feet thick with 24 piles.
- Two column footings – 78 to 120 feet by 30 feet by 8 feet thick with 32 piles.
- Three or more column footings – each column may have individual footings, or several columns may share a single footing. Generally, these occur in transition areas where the stacked aerial mainline structure is transitioning to the ground surface or to an on- or off-ramp.

Drilled shaft foundations are anticipated north of S. Atlantic Street to provide support for the stacked aerial structure and ramps where the suitable load-bearing soils are nearer the surface. The drilled shafts will be from 8 to 14 feet in diameter and will extend 100 to 125 feet below the ground surface. The drilled shaft procedure is described in Section 3.2.1 of the Rebuild Alternative.

Soil Improvements

Soil improvements may be required to strengthen the soils supporting the stacked aerial structure south of S. Washington Street. Deep soil mixing will likely be the soil improvement method used in this area. The footprint of the

soil improvements from S. Holgate Street to S. Atlantic Street ranges from 100 to 220 feet long by 70 to 120 feet wide and extends approximately 100 feet below the ground surface. From S. Atlantic Street to S. Washington Street, soil improvements range from 140 to 220 feet long by 60 to 100 feet wide and extend approximately 60 feet below ground surface. Spoils from the soil improvements will be collected at the surface and will be dewatered either on- or off-site and hauled away to an approved disposal facility. The deep soil mixing procedure is the same as that described in Section 3.2.1 for the Rebuild Alternative.

SR 519 Connection – At-Grade at S. Atlantic Street and S. Royal Brougham Way

On- and off-ramps from the SR 99 stacked aerial to the at-grade SR 519 roadway will be made via ramp structures that will provide the necessary grade transition. These ramps will be built of aerial sections, retained fill sections, and at-grade sections.

Changes to BNSF SIG Rail Yard, Whatcom Rail Yard, and BNSF Tail Track

The BNSF SIG Rail Yard will not require any reconfiguration in the Aerial Alternative. In addition, the tail track will stay in its planned location on Terminal 46.

The Whatcom Rail Yard will be removed during construction to provide space to temporarily relocate SR 99 west of its current alignment to allow for construction of the new aerial structure and roadway. It is expected that the Whatcom Rail Yard will be out of service for approximately 9 years. The Whatcom Rail Yard will be rebuilt once the temporary structure is no longer needed.

Option: SR 99 At-Grade with SR 519 Elevated Access Ramps

This option is essentially identical to the facilities constructed in the Rebuild Alternative, and the construction methods would be similar to those described for the Rebuild Alternative in Section 3.2.1.

SR 99 Roadway – At-Grade

This option and the construction methods would be similar to those described for the Rebuild Alternative in Section 3.2.1.

SR 519 Connection – Elevated Ramps at S. Atlantic Street and S. Royal Brougham Way

This option and the construction methods would be similar to those described for the Rebuild Alternative in Section 3.2.1.

Changes to BNSF SIG Rail Yard, Whatcom Rail Yard, and BNSF Tail Track

This option and the construction methods would be similar to those described for the Rebuild Alternative in Section 3.2.1.

3.3.2 Central – S. King Street to Battery Street Tunnel

The Aerial Alternative involves building an entirely new aerial (viaduct) structure in the location of the existing viaduct. This will be accomplished by constructing a temporary viaduct to the west of the existing viaduct structure and above the rebuilt seawall. The temporary viaduct will provide a detour for northbound and southbound SR 99 traffic so that the new viaduct can be built in the footprint of the existing viaduct.

Temporary Viaduct

The temporary viaduct will include both single-level and double-level transition viaduct structures with two lanes in each direction. The temporary viaduct uses a portion of the permanent double-level viaduct south of S. Royal Brougham Way. The temporary structure transitions to the double-level permanent structure north of S. Royal Brougham Way. The length of the temporary viaduct will depend upon which option (type of facility) is selected in the south, as follows:

1. Stacked aerial in the south: Temporary viaduct is constructed between S. Holgate Street and Pike Street.
2. SR 99 at-grade in the south: Temporary viaduct is constructed between S. King Street and Pike Street and transitions SR 99 to a temporary surface street south of S. King Street.

North of Pike Street, the length of the temporary viaduct will depend upon which detour option is selected:

1. If the Broad Street Detour is used, the southbound lanes of the temporary viaduct structure will end near Pike Street and transition down to Alaskan Way surface street near Stewart Street. Northbound traffic will remain behind the condominiums, switching between the existing and new permanent aerial structures as they are completed.
2. If the Battery Street Flyover Detour option is used, the temporary viaduct structure will extend north above the seawall as a side-by-side temporary viaduct and then turn east and elevate to fly over existing buildings and up to the south end of the BST.

The temporary viaduct structure may be a pre-cast/pre-stressed concrete roadway structure supported on cast-in-place concrete bents. It is anticipated that two drilled shafts will provide the foundation for each bent of the

temporary viaduct structure. The shafts will be 6 to 10 feet in diameter and extend up to 100 feet deep.

The temporary structure is expected to remain in place for 4 to 7 years, depending on the detour used. It would be costı and timeı effective to replace the existing seawall before the temporary structure is built. The permanent aerial structure cannot be constructed until SR 99 traffic is detoured onto the temporary viaduct.

Aerial Structure From S. King Street to Pike Street

Foundation Description for the New Aerial Structures

Drilled shafts will provide the foundation for new, permanent aerial structures. Two shafts will typically be provided for each bent (one under each column) and the shafts' size will range from 10 to 14 feet in diameter and 80 to 100 feet deep.

Description of Aboveground Construction for the New Aerial Structures

New aerial structures will utilize similar structural components as described for the stacked aerial construction in Section 3.3.1, South. Similar structural components will be used for constructing the following:

1. Doubleı level aerial structure from S. King Street to Pike Street.
2. Singleı level structures from Pike Street up to the BST.
3. Singleı level ramps at Columbia Street, Seneca Street, Elliott Avenue, and Western Avenue.

Structural components of the aerial structures are shown in Appendix W, Alternatives and Options Drawings, Exhibit Aı17.

Ramps to Columbia and Seneca Streets

The existing ramps at Columbia Street and Seneca Street will be replaced with new ramps about 3 feet wider than the existing ramps. The ramps will be supported by drilled shafts and constructed using methods and materials described previously for aerial structures.

Aerial Connection From Pike Street to the Battery Street Tunnel

The aerial structure between Pike Street and the BST transitions from a stacked (doubleı level) structure near Pike Street to a sideı by ı side singleı level aerial structure near Virginia Street. The description of the construction is similar to previous descriptions.

To remove the existing structure and replace it with the new aerial, two SR 99 traffic detours are being considered, and the construction sequencing of this

area is dependent upon which detour is selected. The Broad Street Detour and the Battery Street Flyover Detour options are described in further detail below in Section 3.3.3.

Ramps at Western, Elliott, and Battery Street

A northbound off-ramp to Western Avenue and a southbound on-ramp from Elliott Avenue will be constructed as single-level structures using either drilled shafts or piling as foundation supports. The ramp construction is similar to structures that have been previously described. No ramps will be constructed connecting to Battery Street.

Alaskan Way Surface Street

The Alaskan Way surface street will be temporarily relocated under the existing viaduct, with one lane in each direction while the seawall is being rebuilt. Once seawall construction and the temporary viaduct are complete, a temporary Alaskan Way surface street will be constructed above the seawall and under the temporary viaduct.

The permanent Alaskan Way surface street will be constructed after SR 99 traffic is permanently routed onto the new aerial structure and the temporary viaduct is removed. The permanent Alaskan Way surface street has two southbound lanes that are above the soil improvement area for the seawall and two northbound lanes that are under the new aerial structure, which creates a median between the north and southbound lanes.

The existing streetcar tracks will be replaced in the median between the permanent north and southbound lanes of Alaskan Way.

3.3.3 North Waterfront – Pike Street to Myrtle Edwards Park

Alaskan Way Surface Street

The Alaskan Way surface street will be temporarily relocated above the removed streetcar tracks, with one lane in each direction while the seawall is being rebuilt between Pike Street and Broad Street. This will shift the surface street traffic to the east to allow the seawall to be rebuilt. After the seawall is rebuilt, the new Alaskan Way surface street will be constructed near its current location. The existing streetcar tracks will be replaced and surface improvements will be completed.

Broad Street Detour

With the Broad Street Detour, northbound traffic would stay on existing SR 99 throughout the BST while the southbound traffic is diverted from SR 99/Aurora Avenue down Broad Street to the Alaskan Way surface street.

Southbound SR 99 traffic will continue to travel south on the Alaskan Way surface street until it connects to the temporary viaduct structure near Pike Street. This detour will allow SR 99 traffic to flow while the permanent aerial from Pike Street to the BST is being constructed one side at a time. The Broad Street Detour also allows for the Battery Street Tunnel Improvements to be constructed one side at a time, while SR 99 traffic is on the detour.

For Broad Street and Alaskan Way to accommodate two lanes of southbound SR 99 traffic, several temporary trestles or structures are proposed:

- Widen existing Aurora Avenue/SR 99 off-ramp to Broad Street from one lane to two lanes with adequate shoulders.
- Broad Street Overpass – this is a temporary trestle structure that carries southbound SR 99 traffic over Elliott Avenue and the BNSF mainline railroad tracks.
- Transition trestle from Alaskan Way surface street up to the temporary viaduct (Stewart Street to Pike Street).

The Broad Street Detour allows the removal of the existing southbound SR 99 between Pike Street and the BST so a new southbound aerial structure can be built in that location. Improvements to the southbound BST may also be made without traffic in the southbound tunnel. In addition, near Pike Street, a temporary connection can be constructed between the temporary viaduct and the permanent southbound aerial.

Once the southbound aerial and the southbound Battery Street Tunnel Improvements are complete, northbound SR 99 traffic will be diverted onto the temporary viaduct, temporary connection to new aerial, new southbound aerial (Pike Street to BST), and through the southbound section of the BST. This allows all of the remaining existing viaduct to be removed and all of the remaining new aerial structure to be completed.

Option: Battery Street Flyover Detour

The Battery Street Flyover Detour option would divert both northbound and southbound SR 99 traffic off of the existing viaduct at the south portal of the BST. The Battery Street Flyover Detour would require constructing a temporary side-by-side flyover aerial structure that elevates from street level to a sufficient height to span over existing buildings that are along the east side of the Alaskan Way surface street to connect into the existing BST. This detour would allow the existing viaduct between Pike Street and the BST to be removed in its entirety and replaced with the permanent side-by-side aerial structure. SR 99 traffic would not be diverted out of the BST, which would require the Battery Street Tunnel Improvements to be performed with temporary daily lane closures. The Battery Street Flyover Detour would allow Elliott Avenue and Western Avenue to operate as surface streets that would

pass underneath the flyover aerial structure (see Appendix W, Alternatives and Options Drawings, Exhibit A-43).

At the south portal of the BST, the temporary flyover aerial structure for the Battery Street Flyover Detour would extend west above Battery Street and turn south above the Alaskan Way surface street and the new seawall. For the Aerial Alternative, this flyover aerial detour structure would connect to the temporary viaduct located along the downtown waterfront (described in Section 3.3.2) near Pike Street.

Between Pike Street and Blanchard Street, the Battery Street Flyover Detour construction methods would be similar to the descriptions for the temporary viaduct (Section 3.3.2). Between Blanchard Street and the south portal of the BST, the flyover aerial would curve from a north-south direction to an east-west direction to rise enough to elevate above the existing buildings. As a result, the construction of the piers and/or drilled shaft foundations could be larger than those planned for other temporary aerial structures. If drilled shafts are used, shafts ranging from 10 to 14 feet in diameter are anticipated. The piles and/or shafts would use the same basic construction methods described for drilled shaft and/or pier construction. The superstructure (girders and roadway decking) would be constructed using a structural steel girder framework to curve over the buildings and span between the piers to support the cast-in-place concrete roadway deck.

The Battery Street Flyover Detour is also an option for both the Tunnel and Bypass Tunnel Alternatives.

3.3.4 North – Battery Street Tunnel to Ward Street

Battery Street Tunnel Improvements

Fire protection and life safety improvements will be made with all proposed alternatives except for the Rebuild Alternative. Proposed improvements to the BST include the following:

- Extend the tunnel portals. The northbound tunnel portal will be extended about 130 feet to the south, and the southbound tunnel portal will be extended about 120 feet to the north of the existing tunnel portals. The extension is required for jet fans needed to improve tunnel ventilation.
- Air intakes will be constructed on both the south and north ends of the existing tunnel.
- Tunnel vent support structures will be constructed near Western Avenue and Battery Street and John Street and Eighth Avenue. The

structure at John Street and Sixth Avenue will also serve as an incident response facility.

- Four emergency egress points will be added (two on each side of the tunnel). These emergency egress points are expected to be located adjacent to Battery Street within the existing alleys between Second and Third Avenues and between Fifth and Sixth Avenues.

Widened Mercer Underpass

This alternative widens Mercer Street from four lanes to seven lanes as it crosses under SR 99 from Dexter Avenue N. to Fifth Avenue N. Mercer Street will become a two-way street with three lanes in each direction and a left turn lane. SR 99 will remain two lanes in each direction from the BST to Thomas Street, where it will become three lanes in each direction. Thomas Street Overpass will cross over SR 99 with a new two-lane bridge providing one lane in each direction. Left turns off of SR 99 will be prohibited, but right turns from and to SR 99 will be allowed at Harrison, Republican, and Roy Streets. Broad Street will be closed and backfilled from approximately Fifth Avenue to Ninth Avenue.

Thomas Street Bridge

A new bridge with one lane in each direction will be constructed over the top of SR 99 to connect Thomas Street. This will require the construction of a bridge, necessary foundations, and retained fills approaching the bridge on both sides. The bridge will span over the existing SR 99 to pile-supported abutments at each side. The bridge structure and construction methods will be similar to the ramp and retained fills as described in Section 3.3.1.

Mercer Street Underpass Expansion and SR 99 Bridge Reconstruction

Excavation cuts for a 1,200-foot length of Mercer Street will be required to widen the existing Mercer Street. These cuts will be 0 to 30 feet deep and 50 feet wide. In addition, a 1,200-foot-long retaining wall will be constructed on the south side of Mercer Street. Several types of retaining walls are feasible. Currently, a continuous secant pile retaining wall with 3-foot-diameter drilled shafts is being considered. Where used, the depth of the secant pile wall will range from approximately 20 to 40 feet. An additional secant pile retaining wall will be constructed on the north side of the Mercer Street bridge abutment. This wall will be about 40 feet deep and about 200 feet long.

Under this alterative, the SR 99 bridge deck over Mercer Street will be rebuilt using typical bridge construction methods.

Broad Street Closure

Under this alternative, Broad Street will be permanently closed and backfilled from Fifth to Ninth Avenues.

Option: Lowered Aurora/SR 99

This option would lower Aurora/SR 99 from the north portal of the BST to approximately Ward Street. Mercer Street would cross over SR 99 as a one-way street with four lanes eastbound. Roy Street would cross over SR 99 as a one-way street with three lanes westbound. Thomas, Harrison, and Republican Streets would be connected by crossing over SR 99 as two-way streets with two lanes in each direction. Broad Street would be closed from approximately Fifth Avenue to Ninth Avenue.

Lowered Aurora/SR 99

With this north option, Aurora Avenue/SR 99 would be widened and lowered. Excavation for the lowering of Aurora would be from 0 to 30 feet deep, and the width would be expanded 80 to 100 feet. This excavation to lower Aurora Avenue would begin at Denny Way and end near Ward Street (nearly 3,600 linear feet). On- and off-ramps would be constructed to Denny Way, Mercer Street, and Roy Street. These ramps would require excavating up to 30 feet deep and 60 feet wide and constructing new roadway surfaces.

Bridge Construction at Thomas, Harrison, Republican, Mercer, and Roy Streets

New bridges would be constructed to connect local streets over the top of the newly lowered Aurora/SR 99. These bridges would span over the existing SR 99 to pile-supported abutments at each side. The bridge structures and construction methods would be similar to the ramps and retained fills described in Section 3.3.1.

Broad Street Closure

Under this option, Broad Street would be permanently closed and backfilled to raise Mercer Street over Aurora Avenue between Fifth and Ninth Avenues.

3.3.5 Seawall – S. King Street to Myrtle Edwards Park

Rebuilt Seawall

This alternative will use the same seawall structure and construction methods described for the Rebuild Alternative in Section 3.2.5.

Option: Seawall Frame

The Seawall Frame option would replace the existing seawall with a structural frame. A continuous secant pile wall would be constructed behind the existing seawall as described in the Tunnel Alternative. A row of drilled shafts (spaced 10 to 20 feet apart) would be installed 30 to 60 feet east of the secant pile wall.

The frame would consist of two continuous parallel cast-in-place concrete cap beams—one cap beam above the secant wall and another cap beam above the row of drilled shafts. These two parallel cap beams would be tied together as a frame with transverse cast-in-place beams.

This cast-in-place frame would have approximately 12 feet of fill placed above it and would be constructed in a similar manner to a pile cap.

Once seawall construction is completed, the utilities would be permanently relocated to the fill above the Seawall Frame and the Alaskan Way surface street would be constructed.

3.4 Tunnel Alternative

Construction activities for the Tunnel Alternative and its associated options are described below.

3.4.1 South – S. Spokane Street to S. King Street

SR 99 At-Grade With SR 519 Elevated Access Ramps

This alternative will replace the existing viaduct with SR 99 at-grade and SR 519 elevated ramps. This alternative and the construction methods are similar to those described for the Rebuild Alternative in Section 3.2.1.

SR 99 Roadway – At-Grade

This alternative and the construction methods are similar to those described for the Rebuild Alternative in Section 3.2.1.

SR 519 Connection – S. Atlantic Street and S. Royal Brougham Way

This alternative has slightly different ramp connections than those described for the Rebuild Alternative in Section 3.2.1; however, the construction methods will be the same.

Changes to BNSF SIG Rail Yard, Whatcom Rail Yard, and BNSF Tail Track

For this alternative, the construction methods are similar to those described for the Rebuild Alternative in Section 3.2.1.

Option: Side-by-Side Aerial

SR 99 Roadway – Side-by-Side Aerial

Typical atigrade roadway construction methods would be used as described in previous sections. The aerial structure would be constructed with concrete support columns and girders. Most of the concrete for the aerial structures would be castiiniplace. However, preicast components may be used whenever feasible. The SR 99 aerial structures would be supported by 10i to 14ifootidiameter drilled shafts that would extend 125 to 200 feet below the ground surface.

Soil Improvements

Soil improvements using deep soil mixing as described in Section 3.2.1 would be required to support the new sideibyiside aerial structure. Soil improvements are planned from just south of S. Atlantic Street to just north of S. Royal Brougham Way. The footprint of the soil improvements would range from 150 to 220 feet wide and extend approximately 70 feet below the ground surface.

The soil improvement activities would generate spoil material. As with the other alternatives and options described, spoil materials would be collected at the surface of the soil improvements and would be dewatered either onior offisite and hauled away to an approved facility.

SR 519 Connection – At-Grade S. Atlantic Street and S. Royal Brougham Way

Under this alternative, SR 519 would be atigrade. Retained fill sections would be constructed to transition between the SR 519 atigrade roadway and the SR 99 mainline sideibyiside aerial.

Changes to BNSF SIG Rail Yard, Whatcom Rail Yard, and BNSF Tail Track

Due to the increased width of the aerial structure over existing conditions, the Whatcom Rail Yard would need to be relocated. Under this option, the BNSF SIG Rail Yard would be reconfigured to include the relocated Whatcom Rail Yard tracks, which would result in expansion of the existing BNSF SIG Rail Yard to the south, near S. Hanford Street. The BNSF tail track could remain in its planned location on Terminal 46 or alternatively be relocated to the east of SR 99.

The construction approach and equipment that would be used for removing the Whatcom Rail Yard and expanding the BNSF SIG Rail Yard are similar to what has previously been described in Section 3.2.1.

3.4.2 Central – S. King Street to Battery Street Tunnel

Tunnel Without Ramps at Elliott and Western Avenues

With the Tunnel Alternative, the existing viaduct will be replaced with a tunnel from approximately S. King Street up to Pike Street. From Pike Street up to the BST, the viaduct will be replaced with a new aerial structure. This alternative includes on- and off-ramps between the tunnel and Alaskan Way surface street in the Pike Street vicinity. The northbound off-ramp tunnel diverges from the mainline tunnel and dives under the mainline tunnel to allow the exit to Alaskan Way surface street. The existing Elliott Avenue on-ramp and the Western Avenue off-ramp will be eliminated.

Tunnel From S. King Street to Pike Street and Ramps at Union Street

The proposed tunnel construction sequence is best shown in Exhibits 3-1 and 3-2. Specific components of this construction sequence are described in greater detail in the text below.

Excavation

Construction of the Tunnel Alternative requires excavation along the seawall through the central project area to depths up to 65 feet, totaling approximately 1,400,000 cubic yards of excavated soils.[10] The upper 15 to 35 feet of excavation consists of fill materials derived from a variety of sources, including piling and timbers from the existing seawall relieving platform and refuse and debris from a variety of sources. It is anticipated that portions of these fill materials will include low levels of contaminants, petroleum hydrocarbons, and treated and untreated timbers. Excavated materials will be tested for contamination and transported by truck, rail, and/or barge to an appropriate disposal facility.

Dewatering

Tunnel construction requires dewatering to keep construction areas dry and to control the stability of the excavation. In project areas where the drawdown (lowering) of the groundwater table beyond the tunnel excavation would result in excessive settlement at adjacent buildings or structures, the groundwater will be recharged using either trenches or recharge wells to limit this settlement. If determined necessary through water quality monitoring, the water will be treated prior to being discharged. It is anticipated that

[10] Please note, this is an estimate for tunnel excavation only; it does not include other excavated quantities for total project construction. Final quantities could vary +/- 30 percent.

Northbound Tunnel Construction Steps

This Sheet Applies only to Tunnel Alternative

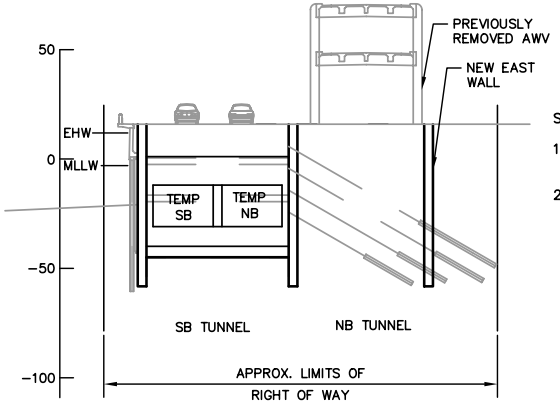

STEP 7 – EXCAVATE NB TUNNEL

1. RELOCATE UTILITIES AS REQUIRED FOR NB TUNNEL EXCAVATION.
2. CONSTRUCT NEW EAST WALL.

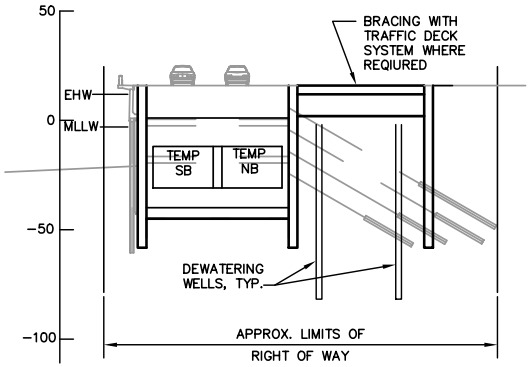

STEP 8 – EXCAVATE NB TUNNEL

1. INSTALL NB TUNNEL DEWATERING WELLS.
2. EXCAVATE FULL WIDTH OF NB TUNNEL TO DEPTH 2 FEET BELOW TOP BRACING LEVEL.
3. INSTALL TOP LEVEL BRACING.
4. INSTALL TRAFFIC DECK WHERE REQUIRED

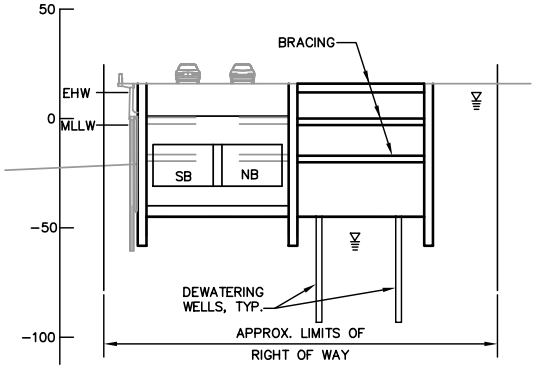

STEP 9 – EXCAVATE NB TUNNEL

1. MAINTAIN DEWATERING.
2. EXCAVATE IN STAGES BELOW EACH BRACING LEVEL.
3. INSTALL BRACING AT EACH LEVEL BEFORE COMMENCING NEXT STAGE OF EXCAVATION.
4. COMPLETE EXCAVATION IN STAGES TO THE BOTTOM OF EXCAVATION.

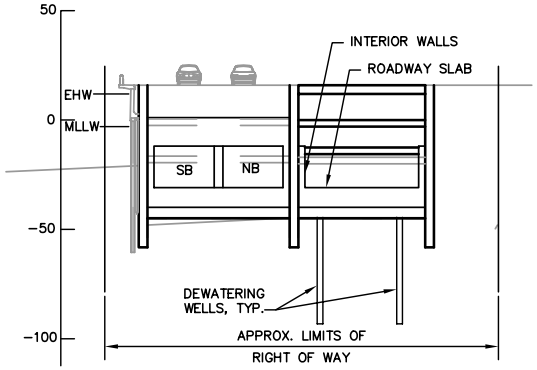

STEP 10 – CONSTRUCT NB TUNNEL

1. MAINTAIN DEWATERING.
2. CONSTRUCT CONCRETE SUB–SLAB AND WATERPROOFING.
3. CONSTRUCT NB ROADWAY SLAB.
4. REMOVE BOTTOM LEVEL BRACING.
5. INSTALL WATERPROOFING ON WALLS ABOVE TOP OF INTERIOR WALL.
6. CONSTRUCT INTERIOR WALLS.
7. INSTALL BRACING BETWEEN INTERIOR WALLS.

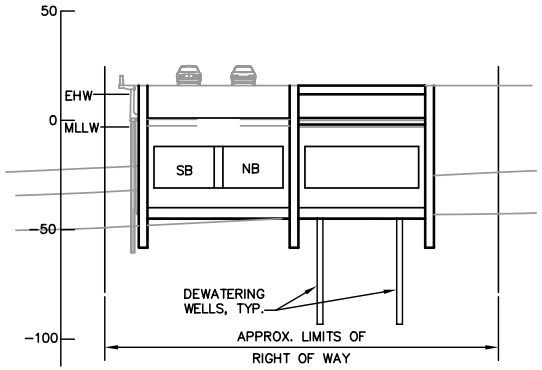

STEP 11– CONSTRUCT NB TUNNEL

1. MAINTAIN DEWATERING
2. CONSTRUCT ROOF STRUCTURE AND COMPLETE CLOSURE POURS.
3. INSTALL WATERPROOFING TO TOP OF NB ROOF STRUCTURE.
4. CONSTRUCT ROOF TOP SLAB.
5. REMOVE RESHORE BRACING.
6. DISCONTINUE NB TUNNEL DEWATERING.

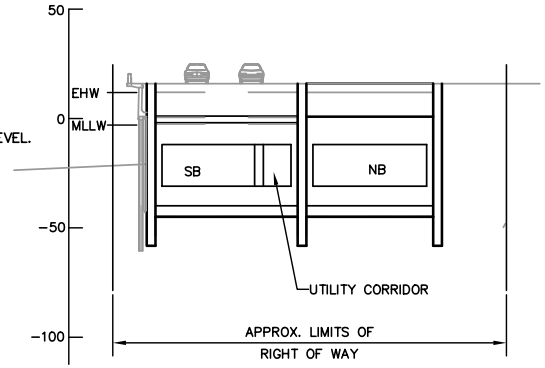

STEP 12 – CONSTRUCT NB TUNNEL

1. REMOVE TRAFFIC DECKING AND TOP LEVEL BRACING.
2. BACKFILL ABOVE TUNNEL. RELOCATE UTILITIES, WHERE REQUIRED, TO PERMANENT LOCATIONS.
3. COMPLETE NB TUNNEL VENTILATION, TUNNEL FINISHES AND SYSTEMS.
4. COMPLETE ALASKAN WAY AND SURFACE IMPROVEMENTS. RESTORE TROLLEY. SHIFT ALASKAN WAY TRAFFIC TO PERMANENT STREET LOCATION.
5. SHIFT NB TRAFFIC FROM THE SB TUNNEL TO THE PERMANENT NB TUNNEL.
6. MODIFY SB TUNNEL TO FINAL CONFIGURATION MAINTINING SB TRAFFIC IN SB TUNNEL.

All dimensions are in feet unless otherwise noted.

Exhibit 3-2

contaminated water requiring treatment will be limited to the shallow groundwater within the upper level fill. Most of the groundwater to be pumped will be from deep soil zones below the bottom of the tunnel and will be acceptable for discharge into Elliott Bay.

Secant Pile Wall Construction

The western wall of the Tunnel Alternative will most likely be a secant pile wall. The secant pile wall will serve a dual purpose. It will replace the existing seawall and it will form the outer wall of the tunnel.

The wall will be constructed of 4ı foot ı diameter interlocking drilled shafts. The shafts will extend up to 90 feet deep along the entire length of the proposed tunnel. For the most part, the secant pile wall will be constructed behind the existing Alaskan Way Seawall, except between Pier 48 and the Colman Dock Ferry Terminal, where the secant pile wall will extend into Elliott Bay and be constructed in front of the existing seawall. A steel sheet pile wall and/or silt curtain will likely be installed during construction to protect overall water quality.

Slurry Wall Construction

A slurry wall is the most likely type of tunnel wall to be constructed for the center and eastern walls of the Tunnel Alternative. The slurry wall will be about 3 feet wide and 90 feet deep along the entire length of the proposed tunnel. Typical slurry wall construction methods are described below.

- The initial excavation will be for two parallel trenches about 3 feet wide and 4 feet deep and 3 to 4 feet apart. The length of the excavation is dependent on the contractor's method, but it will extend as far as practical.
- Precast or cast ı in ı place guide walls will be inserted into the excavated trenches.
- The slurry wall excavation occurs between the two parallel guide walls and uses them to guide the excavation horizontally and vertically to the required depths.
- Excavation will continue and excavated material is replaced with slurry. The slurry material maintains hydrostatic pressure and keeps the walls of the hole from caving in as the excavation progresses. The excavation and slurry injection continues down to the desired depth of the wall (which ranges from 75 to 90 feet).
- Once the slurry wall is excavated, rebar (or steel beams) will be lowered into the hole.

- The hole will then be filled with concrete. The concrete will be placed either with a tremie or by a concrete pump. The slurry material will be pumped out of the hole and reused as the operation continues.
- Excavation and construction of the slurry wall will continue until the wall is the desired length.

Once seawall construction is completed, the utilities will be permanently relocated to the fill above the Seawall Frame, and the Alaskan Way surface street will be constructed.

Ramps to Columbia and Seneca Streets

Ramps will not be constructed at Columbia and Seneca Streets.

On- and Off-Ramps to Alaskan Way Surface Street Near Pike Street

The Tunnel Alternative includes a southbound on ramp from Alaskan Way to the southbound tunnel and a northbound off ramp from the northbound tunnel to Alaskan Way. The northbound off ramp exits on the right side of the mainline tunnel and crosses under the mainline tunnel before reaching the surface street.

These ramps will replace the existing ramps at Columbia and Seneca Streets and the existing ramps at Elliott and Western Avenues.

Aerial Connection From Pike Street to the Battery Street Tunnel

Near Pike Street, the tunnel will transition to an aerial structure to climb over the BNSF railroad tracks and up to the BST. This aerial structure will be constructed in a similar manner to that described under the Aerial Alternative from Pike Street up to the BST. The primary difference is that the aerial structure connecting the new tunnel up to the BST will not have on and off ramps connecting to Elliott and Western Avenues.

Ramps at Elliott and Western Avenues and Battery Street

Under the Tunnel Alternative, no ramps will be constructed to Elliott Avenue, Western Avenue, and Battery Street.

Alaskan Way Surface Street

The Alaskan Way surface street will be temporarily relocated under the existing viaduct, with one lane in each direction while the seawall is being rebuilt. Once seawall construction is complete, a permanent Alaskan Way surface street will be constructed above the tunnel (S. King Street to Pike Street) and above the seawall (Pike Street to Broad Street) using methods previously described. At the end of construction, the existing streetcar tracks

will be replaced and surface improvements will be completed (such as expanded sidewalks).

Option: Tunnel With Ramps at Elliott and Western Avenues

Under this option, the tunnel is the same as described in the central project area. The only difference is that aerial ramps are added to provide access at Elliott and Western Avenues in lieu of the tunnel on- and off-ramps to Alaskan Way. The aerial ramps are constructed in a similar manner as described for the Aerial Alternative in Section 3.3.2.

3.4.3 North Waterfront – Pike Street to Myrtle Edwards Park

Alaskan Way Surface Street

The Alaskan Way surface street will be temporarily relocated above the streetcar tracks, with one lane in each direction while the seawall is being rebuilt. This will shift the surface street traffic to the east to allow the seawall to be rebuilt. After the seawall is rebuilt, the new Alaskan Way surface street will be constructed in its current location. The existing streetcar tracks will be replaced and surface improvements will be completed.

Broad Street Detour

The Broad Street Detour under this alternative would be similar to its description under the Aerial Alternative in Section 3.3.3. However, a slightly different temporary transition structure would be built to accommodate southbound SR 99 traffic near the Alaskan Way surface street and Pike Street. The temporary structures needed for this detour vary depending on the construction stage, but would include either a temporary aerial connection to the existing viaduct from the Alaskan Way surface street or a temporary transitional tunnel/retained cut from the Alaskan Way surface street into the new tunnel.

Option: Battery Street Flyover Detour

This detour option is the same as that described under the Aerial Alternative in Section 3.3.3. The only difference is that the Battery Street Flyover aerial structure would connect either into the existing viaduct or into the new tunnel section instead of connecting to the temporary viaduct as described for the Aerial Alternative.

3.4.4 North – Battery Street Tunnel to Ward Street

Battery Street Tunnel Improvements

The proposed Battery Street Tunnel Improvements are the same as those described for the Aerial Alternative in Section 3.3.4.

Widened Mercer Underpass

The proposed Widened Mercer Underpass is the same as described under the Aerial Alternative in Section 3.3.4.

3.4.5 Seawall – S. King Street to Myrtle Edwards Park

Tunnel Wall and Rebuild

With the Tunnel Alternative, the western wall of the tunnel will serve as both the outer tunnel wall and the new seawall. The construction methods proposed for the western tunnel wall are described in Section 3.4.2 and include replacing the seawall with a secant pile wall. This seawall replacement structure will extend from approximately S. Washington Street (where the tunnel begins) to where the tunnel ends up to Pike Street. Remaining areas of the seawall north of Pike Street will be replaced with the rebuilt seawall alternative described in Section 3.2.5.

3.5 Bypass Tunnel Alternative

Construction activities for the Bypass Tunnel Alternative and its associated options are described below.

3.5.1 South – S. Spokane Street to S. King Street

SR 99 At-Grade With SR 519 Elevated Access Ramps

This alternative will replace the existing viaduct with SR 99 at-grade and SR 519 elevated ramps. This alternative and the construction methods will be similar to those described for the Rebuild Alternative in Section 3.2.1.

SR 99 Roadway – At-Grade

This alternative and the construction methods are similar to those described for the Rebuild Alternative in Section 3.2.1.

SR 519 Connection – S. Atlantic Street and S. Royal Brougham Way

This alternative has slightly different ramp connections than those described for the Rebuild Alternative in Section 3.2.1; however, the construction methods are the same.

Changes to BNSF SIG Rail Yard, Whatcom Rail Yard, and BNSF Tail Track

This alternative and the construction methods are similar to those described for the Rebuild Alternative in Section 3.2.1.

3.5.2 Central – S. King Street to Battery Street Tunnel

Bypass Tunnel Without Ramps at Elliott and Western Avenues

Bypass Tunnel From S. King Street to Pike Street

The construction methods and approach for the Bypass Tunnel Alternative are similar to those described for the Tunnel Alternative in Section 3.4.2. The primary difference is that the Bypass Tunnel is roughly half the width of the Tunnel Alternative, with just two lanes of traffic in each direction, and does not include on- or off-ramps to Alaskan Way near Pike Street. This results in less excavation for the Bypass Tunnel Alternative (approximately 600,000 cubic yards[11]) as compared with the Tunnel Alternative. The overall construction approach is best shown in Exhibit 3-1.

Ramps to Columbia and Seneca Streets

Ramps will not be constructed at Columbia and Seneca Streets.

Aerial Connection From Pike Street to the Battery Street Tunnel

Near Pike Street, the bypass tunnel will transition to an aerial structure to climb over the BNSF tracks and up the hillside to the BST portal. This aerial structure will be constructed in a manner similar to that described for the Aerial Alternative from Pike Street up to the BST. The primary difference is that the aerial structure connecting the bypass tunnel to the BST will not have ramps connecting to Elliott and Western Avenues.

Ramps at Elliott and Western Avenues and Battery Street

Under the Bypass Tunnel Alternative, no ramps will be constructed to Elliott Avenue, Western Avenue, and Battery Street.

[11] Please note, this is an estimate for the bypass tunnel excavation only; it does not include other excavated quantities for total project construction. Final quantities could vary +/- 30 percent.

Alaskan Way Surface Street

The Alaskan Way surface street will be temporarily relocated under the existing viaduct, with one lane in each direction while the seawall is being rebuilt. Once seawall construction is complete, a permanent Alaskan Way surface street will be constructed above the bypass tunnel using methods previously described. The Alaskan Way surface street will have three lanes in each direction. At the end of construction, the existing streetcar tracks will be replaced and surface improvements will be completed (such as expanded sidewalks).

Option: Bypass Tunnel With Roadway to Connect Alaskan Way with Elliott and Western Avenues

With this option, a new roadway would be built to connect the Alaskan Way surface street with Elliott and Western Avenues. This roadway would be built with two lanes (one lane each way) to provide more direct access for Ballard/Interbay traffic.

3.5.3 North Waterfront – Pike Street to Myrtle Edwards Park

Alaskan Way Surface Street

The Alaskan Way surface street will be temporarily relocated above the removed streetcar tracks, with one lane in each direction while the seawall is being rebuilt. This will shift the surface street traffic to the east to allow the seawall to be rebuilt. After the seawall is rebuilt, the new Alaskan Way surface street will be constructed in its current location. The existing streetcar tracks will be replaced and surface improvements completed.

Broad Street Detour

The Broad Street Detour is similar to that described under the Aerial Alternative in Section 3.3.3. However, a slightly different temporary transition structure will be built to accommodate southbound traffic near the Alaskan Way surface street and Pike Street. The temporary structures needed for this detour vary depending on the construction stage, but include both a temporary aerial connection to the existing viaduct from the Alaskan Way surface street and a temporary retained cut/tunnel transitional ramp from the Alaskan Way surface street into the new bypass tunnel.

Option: Battery Street Flyover Detour

The Battery Street Flyover Detour is similar to the description under the Aerial Alternative in Section 3.3.3. The only difference is that the Battery Street Flyover aerial structure would connect into the existing viaduct instead of the temporary viaduct as described in the Aerial Alternative.

3.5.4 North – Battery Street Tunnel to Ward Street

Battery Street Tunnel Improvements

The proposed Battery Street Tunnel Improvements are the same as those described for the Aerial Alternative in Section 3.3.4.

Widened Mercer Underpass

The proposed Widened Mercer Underpass is the same as that described for the Aerial Alternative in Section 3.3.4.

3.5.5 Seawall – S. King Street to Myrtle Edwards Park

Bypass Tunnel Wall and Rebuilt Seawall

The western wall of the bypass tunnel will serve as both the outer tunnel wall and the new seawall. The construction methods proposed for the western tunnel wall are described in Section 3.4.2 and include replacing the seawall with a secant pile wall. This seawall replacement structure will extend from approximately S. King Street (where the tunnel begins) to where the tunnel ends near Pike Street. Remaining areas of the seawall north of Pike Street will be replaced with the rebuilt seawall alternative described in Section 3.2.5.

3.6 Surface Alternative

Construction activities for the Surface Alternative and its associated options are described below.

3.6.1 South – S. Spokane Street to S. King Street

SR 99 At-Grade With SR 519 Elevated Access Ramps

This alternative replaces the existing viaduct with SR 99 at-grade and SR 519 elevated ramps. This alternative and the construction methods will be similar to those described for the Rebuild Alternative in Section 3.2.1.

<u>SR 99 Roadway – At-Grade</u>

This alternative and the construction methods will be similar to those described for the Rebuild Alternative in Section 3.2.1.

<u>SR 519 Connection – S. Atlantic Street and S. Royal Brougham Way</u>

This alternative will have slightly different ramp connections than those described for the Rebuild Alternative in Section 3.2.1; however, the construction methods will be the same.

Changes to BNSF SIG Rail Yard, Whatcom Rail Yard, and BNSF Tail Track

This alternative and the construction methods will be similar to those described for the Rebuild Alternative in Section 3.2.1.

Option: SR 99 At-Grade With SR 519 At-Grade

With this option, both SR 99 and SR 519 access would be atıgrade and would be controlled by signalized intersections. SR 99 would become an atıgrade roadway from S. Spokane Street to Pike Street.

SR 99 Roadway – At-Grade

Typical atıgrade construction methods previously described would be used for this option.

SR 519 Connection – S. Atlantic Street and S. Royal Brougham Way

With this option, the SR 519 connections would be all atıgrade with signalized intersections and would use construction methods previously described.

Changes to BNSF SIG Rail Yard, Whatcom Rail Yard, and BNSF Tail Track

This option would result in the greatest change to the BNSF SIG Rail Yard, Whatcom Rail Yard, and BNSF tail track. If this option were constructed, the BNSF SIG Rail Yard would be reconfigured to include relocated Whatcom Rail Yard tracks.

In addition, the tail track would be shifted from its planned location on Terminal 46 to the east side of SR 99. The tail track would cross S. Atlantic Street atıgrade and would continue north up to S. Royal Brougham Way.

The combination of shifting the tail track south and incorporating the Whatcom Rail Yard into the SIG Rail Yard would result in the need to shift the entire SIG Rail Yard to south of Spokane Street. The relocated SIG Rail Yard would extend to approximately S. Dakota Street south of S. Spokane Street.

As discussed in previous text, the reconfiguration of the SIG Rail Yard would be constructed by removing most of the existing railroad ballast material, creosote rail ties, and steel rails. These materials would be reused to the extent practicable; however, it is assumed that most of this material would be removed and replaced.

3.6.2 Central – S. King Street to Battery Street Tunnel

Alaskan Way Surface Street

The Alaskan Way surface street will be temporarily relocated under the existing viaduct, with one lane in each direction while the seawall is being

rebuilt. Once seawall construction is complete, a temporary Alaskan Way surface street will be constructed above the seawall to allow demolition of the existing viaduct. After removal of the existing viaduct, the permanent Alaskan Way surface street will be constructed using methods previously described. At the end of construction, the existing streetcar tracks will be replaced and surface improvements will be completed.

With this alternative, the viaduct is replaced with an expanded surface (at-grade) roadway from S. King Street to Pine Street. This at-grade roadway has three lanes in each direction and signalized intersections at every cross street except for Union and Pike Streets. A new eastbound aerial structure will connect the Colman Dock Ferry Terminal to the intersection of Columbia Street and First Avenue. A new westbound aerial structure will connect the intersection of Seneca Street and First Avenue to the Alaskan Way surface street. A new aerial structure will connect the permanent SR 99 surface street between Pike Street and the BST.

Methods for constructing the at-grade roadway and building the aerial connection up to the BST have previously been described in other sections of this memorandum. The overpasses to the Colman Dock Ferry Terminal will be supported underground by drilled shafts 10 to 14 feet in diameter and 80 to 120 feet deep.

Ramps at Columbia and Seneca Streets

Ramps at Columbia and Seneca Streets will provide at-grade connections to the downtown surface streets.

Aerial Connection from Pike Street to the Battery Street Tunnel

The aerial connection from Pike Street to the BST will be similar to the description under the Aerial Alternative in Section 3.3.2.

Ramps at Western Avenue, Elliott Avenue, and Battery Street

The ramps at Western and Elliott Avenues are similar to those described for the Aerial Alternative in Section 3.3.2. No ramps are provided at Battery Street.

3.6.3 North Waterfront – Pike Street to Myrtle Edwards Park

Alaskan Way Surface Street

The Alaskan Way surface street will be temporarily relocated above the removed streetcar tracks, with one lane in each direction while the seawall is being rebuilt. This will shift the surface street traffic to the east to allow the

seawall to be rebuilt. After the seawall is rebuilt, the new Alaskan Way surface street will be constructed in its current location. The existing streetcar tracks will be replaced and surface improvements completed.

Broad Street Detour

The Broad Street Detour is similar to the description under the Aerial Alternative in Section 3.3.3. However, a slightly different temporary transition structure will be built to accommodate southbound traffic near the Alaskan Way surface street and Pike Street. The temporary structures needed in this area will vary depending on the construction stage, but will include either a temporary aerial connection to the existing viaduct from the Alaskan Way surface street or a direct connection to the proposed Alaskan Way surface street.

3.6.4 North – Battery Street Tunnel to Ward Street

Battery Street Tunnel Improvements

The proposed Battery Street Tunnel Improvements will be the same as the description for the Aerial Alternative in Section 3.3.4.

Widened Mercer Underpass

The proposed Widened Mercer Underpass will be the same as described for the Aerial Alternative in Section 3.3.4.

Option: Existing SR 99 With Signals at Roy, Republican, and Harrison Streets

Construction activities for this option include adding signals and completing roadway improvements needed to create intersections on SR 99/Aurora Avenue at Harrison, Republican, and Roy Streets. Minor roadway improvements would be necessary on Harrison, Republican, and Roy Streets to provide adequate traffic channelization for the signalized intersections. Finally, Broad Street would be closed and backfilled from Fifth Avenue to Ninth Avenue.

3.6.5 Seawall – S. King Street to Myrtle Edwards Park

Rebuilt Seawall

This alternative will use the same seawall structures and methods described for the Rebuild Alternative in Section 3.2.5.

This Page Intentionally Left Blank

Chapter 4 CONSTRUCTION SEQUENCING

4.1 Construction Sequencing Overview

The following text describes possible construction sequencing for each of the alternatives. Note, these durations are estimates and have been developed only for the proposed alternatives represented in Exhibit 1-3, the Alternatives and Options Chart. These estimates are based on possible ranges of construction durations based on overall risk. The process used to estimate project costs and durations for this project is called the Cost Estimate Validation Process (CEVP). The construction durations used in this technical memorandum represent the 90th percentile of durations calculated through the CEVP. This means that 90 percent of the time, a construction activity would take the same or less time as what is estimated. These estimates will be refined once a preferred alternative is selected and additional information is known regarding project design and funding.

Due to the densely developed, congested urban character of the project area, maintaining the traffic flow and routing during the construction period is a determining factor in construction staging and durations. Because traffic flow is being maintained in the AWV Corridor, certain construction stages must precede others in order to preserve traffic movements in some form. That is why the construction activities and durations tables in this chapter are categorized by traffic stage by alternative.

Exhibit 4-1 indicates the estimated project duration. The project duration for these discussion purposes includes the major improvements and traffic stages and excludes those preliminary construction activities that occur in Traffic Stage 1. These durations also are based on the Construction Assumptions described in Section 3.1.1 under Construction Elements Common to All Alternatives.

Exhibit 4-1. Construction Duration Overview (Stage 2 through Completion)

Alternative	Construction Duration
Rebuild Alternative	7.5 years
Aerial Alternative	11 years
Tunnel Alternative	9 years
Bypass Tunnel Alternative	8.5 years
Surface Alternative	8 years

Traffic Stage 1 maintains traffic in its existing configuration for both SR 99 (the viaduct) and the surface streets, including Alaskan Way. Preliminary site work that is to be performed in Traffic Stage 1 can be performed using surface street lane closures or localized rerouting of the surface street in the immediate vicinity of the preliminary site work.

4.1.1 Traffic Stage 1

The preliminary site work activities that will occur during Traffic Stage 1 will be basically the same for all Build Alternatives. Most of these activities must be performed prior to the major improvements, such as seawall construction.

Exhibit 4-2 provides a listing of the major activities to occur during Traffic Stage 1 that apply to all the alternatives, except as noted. Since these activities are common to all of the Build Alternatives, Traffic Stage 1 is only discussed here (for the Rebuild Alternative) and not repeated under each alternative below.

Exhibit 4-2. Traffic Stage 1 – Construction Activities and Durations

Significant Construction Activity	Duration
Construct alternate ferry holding area on Terminal 46 or east of SR 99	12 months
Construct access road between Pier 48 uplands and Colman Dock Ferry Terminal (between S. Washington and Main Streets)	12 months
Relocate Seattle Fire Station No. 5	15 months
Remove the Waterfront Streetcar and track	6 months
Widen the Alaskan Way surface street over the streetcar tracks from Pike Street to Broad Street	6 months
Remove parking underneath the viaduct and construct a temporary roadway	6 months
Relocate utilities and setup temporary services	18 months
Remove the Whatcom Rail Yard	6 months
Establish construction staging areas	12 months

4.1.2 Utility Relocations in Stage 1

Stage 1 generally addresses utility relocations for the initial movement of utilities and other preliminary site work, as shown in Exhibit 4-2. Utility relocations for the initial utility move are those relocations that would be required for construction of the Seawall Rebuild, the widening of Mercer Street, the construction of the Thomas Street Bridge over Aurora Avenue, and the Broad Street Detour temporary structures to occur in Traffic Stage 2. This

move is primarily a temporary relocation of existing utilities, although wherever possible (such as with the Thomas Street Bridge or Widening of Mercer Street), these utilities will be moved to a permanent location.

South of Pike Street, the utilities will be temporarily relocated under the existing AWV to allow for seawall construction in all the alternatives, as well as the tunnel construction for the Tunnel and Bypass Tunnel Alternatives.

North of Pike Street to Myrtle Edwards Park along Alaskan Way, the utilities would likely be temporarily relocated under the existing (west side) sidewalk and/or the northbound lanes of the existing street to allow for the seawall construction.

Prior to the temporary utility relocations along the waterfront (S. King Street to Myrtle Edwards Park), the existing parking under the AWV as well as the on-street parking north of Pike Street will need to be removed to allow for the temporary utility relocation. Removal of parking under the AWV would occur prior to any of the temporary utility relocations in Traffic Stage 1. Although the project assumes an 18-month duration for the utility relocations, it is acknowledged that some of the relocations may occur earlier, or as soon as the receiving area is available and any necessary permits are received.

These utility relocations must be completed prior to seawall and/or tunnel construction, and as a result, some segments of the relocations may be completed after the seawall construction has started in other segments.

Colman Dock Ferry Terminal traffic will be relocated with a holding area at either Terminal 46 or a location east of SR 99. An access road between Pier 48 and the existing Colman Dock Ferry Terminal will be constructed to provide access from Pier 48 to Colman Dock allowing this ferry queuing to be separate from Alaskan Way surface street general traffic.

Fire Station No. 5 operations will be relocated prior to the seawall construction and to provide adequate access during the construction period.

The Waterfront Streetcar tracks must also be removed prior to Stage 2 construction activities.

Modifications to the BNSF SIG Rail Yard will be made during Stage 1, but could be made later depending on rail operations requirements.

The Whatcom Rail Yard must be removed prior to Traffic Stage 3; however, it is currently scheduled during Traffic Stage 1 to make the Whatcom Rail Yard area available as a potential construction staging site.

The Aerial Alternative incorporates a different SR 519 interchange configuration where SR 99 traffic is carried by a flyover bridge structure,

rather than being at grade. As a result, the Whatcom Rail Yard must be removed during Traffic Stage 1.

4.2 Rebuild Alternative Construction Sequencing

Construction sequencing, staging, and detour routes for the Rebuild Alternative are described in the text below.

4.2.1 Traffic Stage 1 – Site Preparation - 18 Months

During the first 18 months of construction for the Rebuild Alternative, SR 99 traffic will remain on the viaduct in its existing configuration and Alaskan Way surface street traffic will remain as is, with temporary lane closures as needed for preliminary site construction activities.

Colman Dock Ferry Terminal traffic will be relocated with a holding location at either Terminal 46 or a location east of SR 99. An access road between Pier 48 and the existing Colman Dock Ferry Terminal will be constructed.

The Waterfront Streetcar will be removed to allow the construction activities to rebuild the existing viaduct.

Significant construction activities planned for Traffic Stage 1 are shown in Exhibit 4-12.

4.2.2 Traffic Stage 2 – Construction of Seawall - 24 Months

During Traffic Stage 2, SR 99 traffic will remain on the Alaskan Way Viaduct with two lanes moving in each direction. Alaskan Way surface street traffic will maintain one lane of traffic for each direction. The temporary Alaskan Way will be located under the existing viaduct (Massachusetts Street to Pike Street) and on the widened Alaskan Way surface street (Pike Street to Broad Street). Construction activities for this traffic stage are outlined in Exhibit 4-13.

Traffic Locations (Traffic Stage 2):

- SR 99 northbound – on viaduct
- SR 99 southbound – on viaduct
- Alaskan Way (south of Pike Street) – under existing viaduct
- Alaskan Way (north of Pike Street) – streetcar rail bed

4.2.3 Traffic Stage 3 – S. King Street to Battery Street Tunnel - 54 Months

Alaskan Way surface street traffic will be routed to the west above the seawall. This allows for the double-level viaduct to be rebuilt and the single-level viaduct to be retrofitted. SR 99 traffic will travel on the viaduct with two lanes in each direction. Construction activities are outlined in Exhibit 4-14.

Traffic Locations (Traffic Stage 3), S. King Street to BST:

- SR 99 northbound – on viaduct
- SR 99 southbound – on viaduct
- Alaskan Way (south of Pike Street) – above seawall
- Alaskan Way (north of Pike Street) – streetcar rail bed

Exhibit 4-3. Traffic Stage 2 – Rebuild Alternative Construction Activities and Durations

Construction Activity	Duration
Rebuild the seawall from S. King Street to Virginia Street	25 months*
Rebuild the seawall from Virginia Street to Battery Street	16 months
Rebuild the seawall from Battery Street to Myrtle Edwards Park	22 months
Construct the west half of the SR 519 ramp configuration	31 months*
Construct a temporary transition ramp	6 months
Relocate the tail track	12 months
Construct SR 99 at-grade section from S. Hanford Street to S. King Street	3 months
Start rebuilding double-level viaduct from S. Holgate Street to Pike Street	24 months
Start retrofitting single-level viaduct from Pike Street to the Battery Street Tunnel (BST)*	24 months

*These construction activities may overlap into Traffic Stage 3.

Exhibit 4-4. Traffic Stage 3 (S. King Street to BST) – Rebuild Alternative Construction Activities and Durations

Construction Activities	Durations
Complete Rebuild double-level viaduct – S. Holgate Street to Pike Street	54 months
Complete Retrofit single-level viaduct – Pike Street to BST	36 months
Relocate utilities to permanent locations	6 months

4.2.4 Traffic Stage 3 – S. Hanford Street to S. King Street - 30 Months (Concurrent with Traffic Stage 3 – S. King Street to BST)

The work described below between S. Hanford Street and S. King Street will be completed within the 54-month timeframe described above for Stage 3.

In Traffic Stage 3, Alaskan Way surface street traffic traveling from S. Hanford Street to S. King Street will be routed to the west of the existing alignment. One lane will be provided in each direction. The viaduct will be demolished early in this construction stage. Viaduct/SR 99 traffic will be detoured to a

temporary surface roadway from S. Hanford Street to S. King Street. At S. King Street, traffic will be routed onto a temporary transition ramp to the elevated viaduct. Construction activities are outlined in Exhibit 4-5.

Traffic Locations (Traffic Stage 3), S. Hanford Street to S. King Street:

- SR 99 northbound – at-grade
- SR 99 southbound – at-grade
- Alaskan Way (south of Pike Street) – above seawall
- Alaskan Way (south of S. King Street) – west of existing alignment
- Alaskan Way (north of Pike Street) – streetcar rail bed

Exhibit 4-5. Traffic Stage 3 (S. Hanford Street to S. King Street) – Rebuild Alternative Construction Activities and Durations (Concurrent with Exhibit 4-4)

Construction Activities	Duration
Remove viaduct (S. Holgate Street to S. King Street)	6 months
Construct east half of SR 519 ramp configuration	19 months
Construct permanent transition ramp near S. King Street	12 months
Relocate utilities to permanent locations	7 months

4.2.5 Traffic Stage Four – Rebuild Street Restoration and Project Closeout - 8 Months

During the final stage of construction for the Rebuild Alternative, all traffic will be routed to its final configurations. The last stage of construction is expected to take about 8 months.

4.3 Aerial Alternative Construction Sequencing

4.3.1 Traffic Stage 1 – Site Preparation - 18 Months

During the first 18 months of construction for the Aerial Alternative, SR 99 will remain on the viaduct in its existing configuration and Alaskan Way surface street traffic will remain as it is, with temporary lane closures as required for preliminary site construction activities.

Colman Dock Ferry Terminal traffic will be relocated with a holding location at either Terminal 46 or a location east of SR 99. An access road between Pier 48 and the existing Colman Dock Ferry Terminal will be constructed.

The Waterfront Streetcar will be removed to allow the construction activities to rebuild the existing viaduct.

Significant construction activities planned for Traffic Stage 1 are shown in Exhibit 4-16.

Exhibit 4-6. Traffic Stage 1 – Aerial Alternative Construction Activities and Durations

Significant Construction Activities	Duration
Relocate ferry holding area	12 months
Construct access road between Pier 48 and Colman Dock Ferry Terminal (between S. Washington Street and Main Street)	12 months
Relocate Fire Station No. 5	15 months
Remove Waterfront Streetcar and track	6 months
Widen Alaskan Way surface street over removed streetcar tracks (Pike Street to Broad Street)	6 months
Remove parking and build temporary roadway under the viaduct	6 months
Relocate utilities to temporary locations and set up temporary services	18 months
Remove Whatcom Rail Yard	6 months
Establish construction staging areas	12 months

4.3.2 Traffic Stage 2 – Construction of Seawall - 36 Months

During Traffic Stage 2, seawall construction will begin. SR 99 traffic will remain on the Alaskan Way Viaduct with two lanes moving in each direction. Alaskan Way surface street traffic will contain one lane of traffic in each direction that will be located under the existing viaduct (Massachusetts Street to Pike Street) and on the widened Alaskan Way surface street (Pike Street to Broad Street). Construction activities are outlined in Exhibit 4-17.

Exhibit 4-7. Traffic Stage 2 – Aerial Alternative Construction Activities and Durations

Construction Activity	Duration
Rebuild the seawall from S. King Street to Virginia Street	31 months
Rebuild the seawall from Virginia Street to Battery Street	28 months
Rebuild the seawall from Battery Street to Myrtle Edwards Park	30 months
Construct the temporary viaduct structure above seawall	22 months
Complete soil improvements (S. Stacy Street to King Street)	22 months
Construct aerial structure and temporary transition structure (S. Stacy Street to S. Royal Brougham Way)	30 months
Widen existing northbound aerial structure (Pike Street to BST)	19 months
Widen Mercer Underpass	19 months
Establish Broad Street Detour and construct temporary trestles	18 months

Traffic Locations (Traffic Stage 2):

- SR 99 northbound – on viaduct
- SR 99 southbound – on viaduct
- Alaskan Way (south of Pike Street) – under existing viaduct
- Alaskan Way (north of Pike Street) – streetcar rail bed

4.3.3 Traffic Stage 3 –Construct Southbound Aerial (Pike Street to BST) - 30 Months

During the 30 months of Traffic Stage 3 construction, SR 99 northbound traffic will remain on the viaduct using two lanes. Southbound traffic will use the Broad Street Detour and temporary viaduct. The Alaskan Way surface street traffic will be diverted to a temporary roadway above the seawall and under the temporary viaduct with one lane in each direction. Construction activities are outlined in Exhibit 4-8.

Traffic Locations (Traffic Stage 3):

- SR 99 northbound – on viaduct
- SR 99 southbound – on Broad Street Detour
- Alaskan Way (south of Pike Street) – under existing viaduct
- Alaskan Way (north of Pike Street) – streetcar rail bed

Exhibit 4-8. Traffic Stage 3 – Aerial Alternative Construction Activities and Durations

Construction Activities	Duration
Remove southbound viaduct (Pike Street to BST)	6 months
Construct new southbound aerial structure (Pike Street to BST)	20 months
Improve southbound BST	17 months
Prepare for traffic detour (Broad Street Detour)	3 months

4.3.4 Traffic Stage 4 – Construct Aerial Structure and Perform Northbound Battery Street Tunnel Upgrade - 48 Months

During Traffic Stage 4's 48 months of construction activities, northbound SR 99 traffic will be diverted from the existing viaduct to the new southbound Aerial structure (Pike Street to BST), the southbound side of the BST, and the northbound side of the temporary viaduct (S. King Street to Pike Street). Southbound SR 99 traffic will continue to use the Broad Street Detour. Alaskan Way surface street traffic will be diverted to a temporary roadway under the temporary viaduct along the waterfront. Traffic Stage 4's activities and durations are outlined in Exhibit 4-9.

Traffic Locations (Traffic Stage 4):

- SR 99 northbound – on southbound aerial (Pike Street to BST), southbound BST, and northbound temporary viaduct
- SR 99 southbound – on Broad Street Detour
- Alaskan Way (south of Pike Street) – under temporary viaduct/above seawall
- Alaskan Way (north of Pike Street) – streetcar rail bed

Exhibit 4-9. Traffic Stage 4 – Aerial Alternative Construction Activities and Durations

Construction Activities	Duration
Remove remaining portions of the viaduct (S. Holgate Street to BST)	13 months
Construct new northbound aerial structure (Pike Street to BST) Construct aerial structure (S. Royal Brougham Way to Pike Street)	43 months
Improve northbound BST	16 months
Preparation for traffic detour	13 months

4.3.5 Traffic Stage 5 – Surface Restoration - 15 Months

During Traffic Stage 5's 15 months of construction activities, all SR 99 traffic will be diverted to the permanent configuration.

Exhibit 4-10. Traffic Stage 5 – Aerial Alternative Construction Activities and Durations

Construction Activities	Duration
Relocate utilities to permanent location	7 months
Remove temporary viaduct structure	7 months
Restore Alaskan Way surface street	8 months

4.4 Tunnel Alternative Construction Sequencing

4.4.1 Traffic Stage 1 – Site Preparation - 18 Months

During the first 18 months of construction for the Tunnel Alternative, SR 99 will remain on the viaduct in its existing configuration and Alaskan Way surface street traffic will remain as it is, with temporary lane closures as required for preliminary site construction activities. Colman Dock Ferry Terminal traffic will be relocated with a holding area at either Terminal 46 or a location east of SR 99. An access road between Pier 48 and the existing

Colman Dock Ferry Terminal will be constructed. The Waterfront Streetcar will be removed to allow the construction activities to rebuild the existing viaduct. Significant construction activities planned for Traffic Stage 1 are shown in Exhibit 4-11.

Exhibit 4-11. Traffic Stage 1 – Tunnel Alternative Construction Activities and Durations

Construction Activities	Duration
Construct alternate ferry holding area (Terminal 46 or east of SR 99)	13 months
Construct access road between Pier 48 and Colman Dock Ferry Terminal (between S. Washington Street and Main Street)	12 months
Relocate Fire Station No. 5	15 months
Remove Waterfront Streetcar and track	6 months
Widen Alaskan Way surface street over removed streetcar area (Pike Street to Broad Street)	6 months
Remove parking and build temporary roadway under the viaduct	6 months
Relocate utilities to temporary locations and set up temporary services	18 months
Remove Whatcom Rail Yard	6 months
Establish construction staging areas	12 months

4.4.2 Traffic Stage 2 – Construction of Seawall and Southbound Tunnel Construction - 24 Months

During Traffic Stage 2, the SR 99 traffic will remain on the Alaskan Way Viaduct (two lanes each way), while the Alaskan Way surface traffic will be restricted to one lane each direction operating under the existing viaduct from Main Street to Pike Street, and then on the widened Alaskan Way surface street from Pike Street to Broad Street.

Southbound tunnel and seawall construction will begin in this stage. Construction activities are outlined in Exhibit 4-12.

Traffic Locations (Traffic Stage 2):

- SR 99 northbound – on viaduct
- SR 99 southbound – on viaduct
- Alaskan Way (south of Pike Street) – under existing viaduct
- Alaskan Way (north of Pike Street) – streetcar rail bed

Exhibit 4-12. Traffic Stage 2 – Tunnel Alternative Construction Activities and Durations

Construction Activity	Duration
Start construction on southbound tunnel from S. Washington Street to Pike Street and construct seawall from Union Street to Virginia Street	23 months
Rebuild the seawall from Virginia Street to Battery Street	15 months
Rebuild the seawall from Battery Street to Myrtle Edwards Park	23 months
Widen northbound aerial structure from Pike Street to BST	12 months
Widen Mercer Underpass	19 months
Establish Broad Street Detour and construct temporary trestles (includes trestle from Broad Street to Alaskan Way surface street and trestle on Alaskan Way to existing viaduct)	13 months

4.4.3 Traffic Stage 3 – Southbound Aerial Construction (Pike Street to BST) and Southbound Battery Street Tunnel Upgrade - 36 Months

During the 36 months of Traffic Stage 3 construction, SR 99 northbound traffic will remain on the viaduct with two lanes. Southbound traffic will use the Broad Street Detour. The traffic cannot be diverted from the Broad Street Detour until the southbound tunnel is completed as described in Section 4.4.4. The Alaskan Way surface street traffic will be diverted under the existing Alaskan Way Viaduct with one lane each way. Construction activities are outlined in Exhibit 4-13.

Traffic Locations (Traffic Stage 3):

- SR 99 northbound – on viaduct
- SR 99 southbound – on Broad Street Detour
- Alaskan Way (south of Pike Street) – under existing viaduct
- Alaskan Way (north of Pike Street) – streetcar rail bed

Exhibit 4-13. Traffic Stage 3 – Tunnel Alternative Construction Activities and Durations

Construction Activities	Duration
Construct new southbound aerial structure (Pike Street to BST)	23 months
Improve southbound BST	16 months
Relocate utilities to permanent locations from S. King Street to BST	28 months

4.4.4 Traffic Stage 2 or 3 – SR 99 Traffic Either on Viaduct or Using the Broad Street Detour

The construction activities listed below will occur concurrently with work being completed in Traffic Stage 2 or 3. While this work is being completed, northbound SR 99 traffic will be traveling on the viaduct. Southbound SR 99 traffic will be using either the viaduct or the Broad Street Detour. Alaskan Way surface street traffic will be routed under the viaduct. Construction activities are outlined in Exhibit 4-14.

Traffic Locations (Traffic Stage 2 or 3):

- SR 99 northbound – on viaduct
- SR 99 southbound – on either viaduct or Broad Street Detour
- Alaskan Way (south of Pike Street) – under existing viaduct
- Alaskan Way (north of Pike Street) – streetcar rail bed

Exhibit 4-14. Traffic Stage 2 or 3 – Tunnel Alternative Construction Activities and Durations

Construction Activities	Duration
Construct southbound tunnel and seawall from S. Washington Street to Pike Street	31 months
Complete south end soil improvements (S. Holgate Street to King Street)	22 months
Construct west half of the SR 519 ramp configuration	29 months

4.4.5 Traffic Stage 4 – Removal of Viaduct and Construction of Northbound Aerial Structure From Pike Street to BST, Northbound BST Upgrades, and East Half of SR 519 Ramp Configuration - 36 Months

During Traffic Stage 4's 36 months of Tunnel Alternative construction activities, northbound SR 99 traffic will be diverted to the southbound BST, the new southbound aerial (Pike Street to BST), and into the completed southbound tunnel. Southbound SR 99 traffic will be maintained on the Broad Street Detour. The Alaskan Way surface street traffic will be diverted to the temporary roadway above the new southbound tunnel. Traffic Stage 4's construction activities and durations are outlined in Exhibit 4.15.

Traffic Locations (Traffic Stage 4):

- SR 99 northbound – on southbound aerial (Pike Street to BST), southbound BST into the completed southbound tunnel
- SR 99 southbound – on Broad Street Detour into new southbound tunnel

- Alaskan Way (south of Pike Street) – above new southbound tunnel
- Alaskan Way (north of Pike Street) – streetcar rail bed

Exhibit 4-15. Traffic Stage 4 – Tunnel Alternative Construction Activities and Durations

Construction Activities	Duration
Remove remaining existing viaduct (S. Holgate Street to BST)	13 months
Construct northbound tunnel (S. King Street to Pike Street)	30 months
Construct new northbound aerial structure (Pike Street to BST)	23 months
Improve northbound BST	17 months
Construct eastside of SR 519 ramp configuration and south end ramps	25 months
Relocate tail track	12 months

4.4.6 Traffic Stage 5 – Surface Restoration and Project Closeout - 13 Months

During Traffic Stage 5's 13 months of construction activities, all SR 99 and Alaskan Way surface traffic will be diverted to their permanent configurations.

4.5 Bypass Tunnel Alternative Construction Sequencing

4.5.1 Traffic Stage 1 – Site Preparation - 18 Months

During the first 18 months of construction for the Bypass Tunnel Alternative, SR 99 will remain on the viaduct in its existing configuration and Alaskan Way surface street traffic will remain as it is, with temporary lane closures as required for the preliminary site construction activities.

Colman Dock Ferry Terminal traffic will be relocated with a holding location at either Terminal 46 or a location east of SR 99. An access road between Pier 48 and the existing Colman Dock Ferry Terminal will be constructed.

The Waterfront Streetcar will be removed to allow the construction activities to rebuild the existing viaduct.

Significant construction activities planned for Traffic Stage 1 are shown in Exhibit 4-16.

Exhibit 4-16. Traffic Stage 1 – Bypass Tunnel Alternative Construction Activities and Durations

Construction Activity	Duration
Construct alternate ferry holding area (Terminal 46 or east of SR 99)	12 months
Construct access road between Pier 48 and Colman Dock Ferry Terminal (between S. Washington Street and Main Street)	12 months
Relocate Fire Station No. 5	15 months
Remove Waterfront Streetcar and track	6 months
Widen Alaskan Way surface street over removed streetcar track (Pike Street to Broad Street)	6 months
Remove parking and build temporary roadway under viaduct	6 months
Relocate utilities to temporary locations and set up temporary services	18 months
Remove Whatcom Rail Yard	6 months
Establish construction staging areas	12 months

4.5.2 Traffic Stage 2 – Construction of Seawall and Southbound Tunnel - 24 Months

During Traffic Stage 2, the SR 99 traffic will remain on the Alaskan Way Viaduct (two lanes each way), while the Alaskan Way surface street traffic will be restricted to one lane each direction operating under the existing viaduct from Main Street to Pike Street, and on the widened Alaskan Way surface street from Pike Street to Broad Street. Construction activities are outlined in Exhibit 4-17.

Traffic Locations (Traffic Stage 2):

- SR 99 northbound – on viaduct
- SR 99 southbound – on viaduct
- Alaskan Way (south of Pike Street) – under existing viaduct
- Alaskan Way (north of Pike Street) – streetcar rail bed

Exhibit 4-17. Traffic Stage 2 – Bypass Tunnel Alternative Construction Activities and Duration

Construction Activity	Duration
Rebuild seawall from Pike Street to Battery Street	15 months
Rebuild seawall from Battery Street to Myrtle Edwards Park	22 months
Widen existing northbound aerial structure (Pike Street to BST)	13 months
Construct temporary trestles for Broad Street Detour (Broad Street trestle and trestle from Pike Street to viaduct); establish Broad Street Detour	16 months

4.5.3 Traffic Stage 3 – Southbound Aerial Construction (Pike Street to BST) and Southbound Battery Street Tunnel Upgrade - 30 Months

During Traffic Stage 3, SR 99 will have two lanes provided in each direction. Northbound traffic will travel on the viaduct, and southbound traffic will be routed to the Broad Street Detour. Alaskan Way surface street traffic will continue to have one lane provided in each direction and be routed under the existing viaduct. Construction activities are outlined in Exhibit 4-18.

Traffic Locations (Traffic Stage 3):

- SR 99 northbound – on viaduct
- SR 99 southbound – on Broad Street Detour
- Alaskan Way (south of Pike Street) – under existing viaduct
- Alaskan Way (north of Pike Street) – streetcar rail bed

Exhibit 4-18. Traffic Stage 3 – Bypass Tunnel Alternative Construction Activities and Duration

Construction Activities	Duration
Remove southbound viaduct from Pike Street to BST	12 months
Construct new southbound aerial structure (Pike Street to BST)	18 months
Construct southbound Battery Street Tunnel Improvements	17 months

4.5.4 Traffic Stage 2 or 3 – Southbound Aerial Construction (Pike Street to BST) and Southbound Battery Street Tunnel Upgrade - 30 Months

The construction activities listed below in Exhibit 4-19 will occur concurrently with work being completed in either Stage 2 or 3. While this work is being completed, northbound SR 99 traffic will travel on the viaduct. Southbound SR 99 traffic will be using either the viaduct or the Broad Street Detour. Alaskan Way surface street traffic will be routed under the viaduct.

Traffic Locations (Traffic Stage 2 or 3):

- SR 99 northbound – on viaduct
- SR 99 southbound – on either viaduct or Broad Street Detour
- Alaskan Way (south of Pike Street) – under existing viaduct
- Alaskan Way (north of Pike Street) – streetcar rail bed

Exhibit 4-19. Traffic Stage 2 or 3 – Bypass Tunnel Alternative Construction Activities and Duration

Construction Activities	Duration
Construct tunnel and seawall from S. Washington Street to Pike Street	53 months
Build the west half the SR 519 ramp configuration	28 months
Widen the Mercer Street Underpass	25 months
Relocate the tail track	12 months

4.5.5 Traffic Stage 4 – Removal of Viaduct and Construction of Northbound Aerial Structure From Pike Street to BST, Northbound BST Upgrades, and East Half of SR 519 Ramp Configuration - 30 Months

During Stage 4's 30 months of Bypass Tunnel Alternative construction activities, northbound SR 99 traffic will be diverted to the bypass tunnel, the southbound aerial structure up to the BST, and the southbound section of the BST. Southbound SR 99 traffic will be maintained on the Broad Street Detour. The Alaskan Way surface street traffic will be diverted to the temporary roadway above the bypass tunnel. Stage 4's activities and durations are outlined in Exhibit 4-20.

Traffic Locations (Traffic Stage 4):

- SR 99 northbound – on southbound aerial (Pike Street to BST), southbound BST, and into the completed bypass tunnel
- SR 99 southbound – on Broad Street Detour
- Alaskan Way (south of Pike Street) – temporary roadway above bypass tunnel
- Alaskan Way (north of Pike Street) – streetcar rail bed

Exhibit 4-20. Traffic Stage 4 – Bypass Tunnel Alternative Construction Activities and Duration

Construction Activities	Duration
Remove existing viaduct	13 months
Construct new northbound aerial structure (Pike Street to BST)	20 months
Construct northbound Battery Street Tunnel Improvements	17 months
Construct eastside of SR 519 ramp configuration and south end ramps	19 months

4.5.6 Traffic Stage 5 – Surface Restoration and Project Closeout - 18 Months

During Traffic Stage 5's 18 months of construction activities, all SR 99 and Alaskan Way surface street traffic will be diverted to their permanent configurations. In addition, those utilities not previously relocated to their permanent location will be relocated to their permanent location (12 months).

4.6 Surface Alternative Construction Sequencing

4.6.1 Traffic Stage 1 – Site Preparation - 18 Months

During the first 18 months of construction for the Surface Alternative, SR 99 traffic will remain on the viaduct in its existing configuration and Alaskan Way surface street traffic will remain as is, with temporary lane closures as needed for preliminary site construction activities.

Colman Dock Ferry Terminal traffic will be relocated with a holding location at either Terminal 46 or a location east of SR 99. An access road between Pier 48 and the existing Colman Dock Ferry Terminal will be constructed.

The Waterfront Streetcar will be removed to allow the construction activities to rebuild the existing viaduct.

Significant construction activities planned for Traffic Stage 1 are shown in the Exhibit 4-21 below.

Exhibit 4-21. Traffic Stage 1 – Surface Alternative Construction Activities and Durations

Construction Activity	Duration
Construct ferry holding area on Terminal 46	13 months
Construct access road between Pier 48 and Colman Dock Ferry Terminal (between S. Washington Street and Main Street)	12 months
Remove the Waterfront Streetcar and track	6 months
Relocate Seattle Fire Station No. 5	15 months
Widen the Alaskan Way surface street over the streetcar tracks from Pike Street to Broad Street	6 months
Remove parking underneath the Alaskan Way Viaduct and construct a temporary roadway	6 months
Relocate utilities and setup temporary services	18 months
Remove the Whatcom Rail Yard	6 months
Establish construction staging areas	12 months

4.6.2 Traffic Stage 2 – Construction of Seawall - 30 Months

During Traffic Stage 2, seawall construction will begin. SR 99 traffic will remain on the Alaskan Way Viaduct with two lanes moving in each direction. Alaskan Way surface street traffic will contain one lane of traffic for each direction, located under the existing viaduct (Massachusetts Street to Pike Street) and on the widened Alaskan Way surface street (Pike Street to Broad Street). Construction activities are outlined in Exhibit 4-22 below.

Traffic Locations (Traffic Stage 2):

- SR 99 northbound – on viaduct
- SR 99 southbound – on viaduct
- Alaskan Way (south of Pike Street) – under existing viaduct
- Alaskan Way (north of Pike Street) – streetcar rail bed

Exhibit 4-22. Traffic Stage 2 – Surface Alternative Construction Activities and Durations

Construction Activity	Duration
Rebuild seawall from S. King Street to Virginia Street	26 months
Rebuild seawall from Virginia Street to Battery Street	16 months
Rebuild seawall from Battery Street to Myrtle Edwards Park	24 months
Widen the existing northbound aerial structure from Pike Street to BST	13 months
Construct Broad Street Detour and temporary trestle	13 months
Relocate tail track	13 months

4.6.3 Traffic Stage 3 - Southbound Aerial (Pike Street to BST) and Southbound Battery Street Tunnel Upgrade - 30 Months

During the 30 months of Traffic Stage 3 construction, SR 99 northbound traffic will remain on the viaduct. Southbound SR 99 traffic will use the Broad Street Detour. The Alaskan Way surface street traffic will be diverted under the existing Alaskan Way Viaduct with one lane each in each direction. Construction activities are outlined in Exhibit 4-23.

Traffic Locations (Traffic Stage 3):

- SR 99 northbound – on viaduct
- SR 99 southbound – on Broad Street Detour
- Alaskan Way (south of Pike Street) – under existing viaduct
- Alaskan Way (north of Pike Street) – streetcar rail bed

Exhibit 4-23. Traffic Stage 3 – Surface Alternative Construction Activities and Durations

Construction Activities	Duration
Construct new southbound aerial structure (Pike Street to BST)	24 months
Construct southbound Battery Street Tunnel Improvements	17 months
Construct temporary SR 99 and Alaskan Way surface street above the seawall	6 months

4.6.4 Traffic Stage 2 or 3 – Route Alaskan Way Surface Traffic Under Existing Viaduct

The construction activities listed below will occur concurrently with work being completed in either Traffic Stage 2 or 3. While this work is being completed, northbound SR 99 traffic will travel on the viaduct. Southbound SR 99 traffic will be using either the viaduct or the Broad Street Detour. Alaskan Way surface street traffic will be routed under the viaduct. Activities that could take place either in Traffic Stage 2 or 3 are listed below in Exhibit 4-24.

Traffic Locations (Traffic Stage 2 or 3):

- SR 99 northbound – on viaduct
- SR 99 southbound – on Broad Street Detour
- Alaskan Way (south of Pike Street) – under existing viaduct
- Alaskan Way (north of Pike Street) – streetcar rail bed

Exhibit 4-24. Traffic Stage 2 or 3 – Route Alaskan Way Surface Traffic Under Existing Viaduct

Construction Activity	Duration
Complete seawall from S. King Street to Pike Street	14 months
Relocate utilities to permanent location above seawall	15 months
Soil improvements from S. Stacy Street to S. King Street	18 months
Construct west half of SR 519 ramp configuration	27 months
Widen Mercer Street Underpass	22 months

4.6.5 Traffic Stage 4 – Removal of Viaduct and Completion of Structure - 30 Months

During Traffic Stage 4's 30 months of Surface Alternative construction activities, northbound SR 99 traffic will be diverted to the southbound BST, the new southbound aerial structure (Pike Street to BST), and temporary at grade SR 99 (S. Holgate Street to Pike Street). Southbound traffic will use the

Broad Street Detour. The Alaskan Way surface street traffic will be diverted to the temporary roadway above the seawall. Traffic Stage 4's activities are shown below in Exhibit 4-25.

Traffic Locations (Traffic Stage 4):

- SR 99 northbound – on southbound aerial (Pike Street to BST), southbound BST, and northbound temporary at-grade roadway (S. Holgate Street to Pike Street)
- SR 99 southbound – on Broad Street Detour
- Alaskan Way (south of Pike Street) – temporary roadway above seawall
- Alaskan Way (north of Pike Street) – streetcar rail bed

Exhibit 4-25. Traffic Stage 4 – Surface Alternative Construction Activities and Durations

Construction Activities	Duration
Remove remaining existing viaduct	13 months
Construct northbound aerial structure (Pike Street to BST)	23 months
Construct northbound BST upgrades	17 months
Construct east side of SR 519 ramp configuration and south end at-grade	22 months
Construct permanent SR 99 at-grade roadway (S. Holgate Street to Pike Street) and complete permanent utility relocation	12 months

4.6.6 Traffic Stage 5 – Surface Restoration and Project Closeout - 8 Months

During Traffic Stage 5's 8 months of construction activities, all SR 99 and Alaskan Way surface traffic will be moved to their permanent configurations.

Chapter 5 CUMULATIVE IMPACTS

The Alaskan Way Viaduct and Seawall Replacement Project must consider the long-term cumulative effects, or those impacts that are additive effects of the project, when combined with other reasonably foreseeable developments or actions in the future. The cumulative effects must be identified in an effort to try to avoid or minimize their possible effects and incorporate mitigation and project planning where needed.

All of the alternatives are comparable in terms of likely cumulative effects. The description below is generalized to assume the proposed action of Replacement of the Alaskan Way Viaduct and Seawall as a whole.

During AWV's construction phase, several other projects are expected to be under construction in the downtown Seattle area, including Sound Transit's Central Link Light Rail, Mercer Street Corridor improvements, the Seattle Monorail Project, and the Colman Dock Ferry Terminal Expansion.

If construction detours and material haul routes are not well coordinated, the projects could have adverse cumulative effects on traffic congestion and associated air pollutant emissions. If other construction projects take place within the immediate vicinity (less than approximately 1,000 feet) of the Alaskan Way Viaduct and Seawall Replacement Project construction areas, the cumulative effects of noise and dust and other potential construction impacts could increase in the vicinity of those activities.

The Link Light Rail Project – The Link Light Rail line is planned to run from Westlake Station in the Downtown Seattle Transit Tunnel to S. 154th Street near the SeaTac International Airport. Initial construction work began in 2003 and will continue through 2009. As part of the project, the Downtown Seattle Transit Tunnel will be closed for a two-year period to equip the tunnel for joint bus and light rail operations. While the Transit Tunnel work is underway, buses that currently run in the Transit Tunnel would need to operate on downtown surface streets. The closure period could occur between 2005 and 2009.

Seattle Monorail Project – A Monorail line will be built through downtown between West Seattle and Ballard. Construction will begin in 2005 and the initial segment of the Monorail Green Line (currently proposed as Fifth/Stewart to Dravus/Elliott) is scheduled for opening in December 2007. The remainder of the Green Line is currently scheduled for opening by late 2009. The proposed alignment through downtown Seattle would primarily be located within existing roadways. Beginning in the south end, the route will cross SR 99 at approximately S. Horton Street and continue on First Avenue S.

up to Safeco Field. It will transition over to Fourth Avenue S. and connect with Second Avenue. Through most of downtown, it will run on Second Avenue. In Belltown, it will shift to Fifth Avenue and continue north to Seattle Center. Monorail stations are proposed at about eight locations through this segment.

It is likely that construction of sections of Link Light Rail and/or Monorail will overlap with some of the viaduct and seawall construction. If construction schedules overlap, they could have a cumulative effect in the downtown area. Together, these projects could:

- Intensify traffic congestion through downtown. This would cause problems for drivers, particularly transit and emergency service providers. Excessive congestion in downtown could negatively affect businesses if people chose to avoid downtown due to congested areas.
- Cumulatively increase noise and air quality impacts.
- Cause problems for utility providers. All three projects require utilities to be relocated. Funding, having enough skilled workers, and ensuring minimal utilities disruptions will be challenging.

The AWV project's lead agencies could work together with Sound Transit (responsible for Link) and the Monorail Authority (Seattle Monorail Project) to minimize these potential effects through effective up-front planning and coordination. As project design and construction planning continues, the lead agencies will continue to work with these other agencies to minimize these possible cumulative effects.

Colman Dock Ferry Terminal Expansion – The Washington State Ferries (part of WSDOT) is planning to expand their operations at the Colman Dock Ferry Terminal. Environmental review of this project is expected to begin in 2004. Several alternatives will be considered, most of them would require expanding the existing over-water pier, and doing some maintenance on the pier. Construction is anticipated to be completed right before major viaduct and seawall construction would begin in 2008.

Because Washington State Ferries is part of WSDOT, the planning of the proposed expansion of Colman Dock is being closely coordinated with the planning for the Alaskan Way Viaduct and Seawall Replacement Project. This coordination is recognized as critical since these projects interact directly due to their geographic proximity and their importance in the regional transportation network. This coordination should help minimize the potential for negative cumulative effects in the corridor. Possible effects are likely to include traffic congestion and effects to aquatic life, and several other smaller or less well-defined projects.

It is very difficult to predict what construction projects might occur in the downtown Seattle area over the next 20 years. However, there are several possible projects that are likely to occur, including:

SR 519 – This is a joint City of Seattle and WSDOT project that involves reconstructing connections between Seattle and I-90 and elevating S. Atlantic Street above the railroad tracks to avoid conflicts. The first phase of this project at S. Royal Brougham Way and S. Atlantic Street is mostly complete. As a result, a new on-ramp to I-90 has been built at Fourth Avenue S. and S. Royal Brougham Way. The second phase of this project has not yet been designed and funding has not been identified, so construction would not likely begin until at least 2010. As such, it is difficult to predict potential cumulative effects from these projects. However, since these projects have the same lead agencies, coordination of any impacts will be facilitated, which could result in benefits to both projects.

Terminal 46 – The Port of Seattle owns Terminal 46, an 80+-acre parcel of land south of S. King Street. The site is now a large container handling terminal. The land is leased through 2010, with the potential to extend the lease to 2015. Ultimately, the Port of Seattle may redevelop the terminal into a more dense urban activity center. Specific plans and construction dates have not been identified. If redevelopment were to move forward, it could overlap with part of viaduct and seawall construction. At this time, there are no cumulative effects expected, but development plans at Terminal 46 will be monitored to ensure that cumulative effects are not an issue.

Seattle Aquarium and Waterfront Park – The Seattle Parks and Recreation Department and the Seattle Aquarium Society have proposed expanding the Aquarium and developing a new waterfront park on Piers 62/63. Plans are currently being developed. The lead agencies will continue to coordinate with the Aquarium. At this time, cumulative effects are not anticipated.

Elliott to Alaskan Way Underpass – The City of Seattle would construct an underpass at Broad Street connecting Alaskan Way to Elliott Avenue. This project is in the planning stages. The underpass would separate conflicts between the railroad and vehicles. If it is built, it would be constructed before the Alaskan Way Viaduct and Seawall Replacement Project; therefore, cumulative impacts are not expected.

Seattle Downtown Proposed Development – A total of 19 private development projects are in various stages of obtaining permits from the City of Seattle. Together, these projects will add about 600 residential units, 1.3 million square feet of office space, and about 91,000 square feet of retail space. These projects would likely be built between 2006 and 2010. Since the City is a lead agency, they will keep the project team informed of any potential

construction projects that might cause cumulative effects. At this time, potential concerns have not been identified.

Mercer Street Corridor – The City of Seattle is planning improvements in the South Lake Union area. Mercer Street and Valley Street may be reconstructed and reconfigured between Dexter Avenue N. and I-5. Environmental review is anticipated to start in 2004. Final design would occur in approximately 2005, with construction occurring between approximately 2006 and 2009. As such, construction on this project that crosses Aurora Avenue N. could overlap with the start of construction on the AWV project.

South Lake Union Redevelopment – Many of the light industrial properties located in the South Lake Union neighborhood have been purchased over the past years for redevelopment. Plans are to construct a biotechnology center for private industries centered around the existing Fred Hutchinson Cancer Research Center. Other research and development projects are proposed that would be associated with the University of Washington. The overall development plans also include mixed retail and residential development projects. In total, this development is anticipated to provide office space for an estimated 20,000 workers and an estimated 10,000 dwelling units. Assuming an average of approximately 387 square feet per employee, total office space would total approximately 7.7 million square feet (see Appendix P, Economic Technical Memorandum). The anticipated build-out of these projects would occur over the coming 20 years. Development projects in this Seattle neighborhood would be ongoing concurrent with proposed construction related to the proposed Alaskan Way Viaduct and Seawall Replacement Project.

Belltown/Queen Anne Proposed Development – A total of 17 private projects in the Seattle Center/Queen Anne/Belltown area are in various stages of obtaining their Master Use Permits from the Seattle Department of Design, Construction and Land Use. Most are buildings with a mix of residential, retail, and office uses. This proposed construction activity totals approximately 606 dwelling units (estimated population of 957 persons), 1.3 million square feet of office space, and approximately 91,000 square feet of retail space. The build-out of this proposed development would likely occur between 2006 and 2010. A portion of this proposed development would likely still be under construction at the start of proposed construction of the Alaskan Way Viaduct and Seawall Replacement Project.

I-5 Improvements

WSDOT is developing a plan to rebuild portions of northbound and southbound I-5, including operational improvements. These improvements would extend from Tukwila to Northgate pending funding, engineering, and

scheduling approvals. Improvements may include the removal and replacement of existing pavement with thicker concrete, joint reinforcements, and traffic flow improvements by providing greater lane continuity at bottleneck locations. The project is scheduled to start construction in 2007 if full funding becomes available.

Other Projects

There are three other major transportation projects that are planned over the next 15 years, but funding is still uncertain. These include SR 509 Improvements, SR 405, and SR 520 Bridge. None of these are likely to have any significant cumulative effects on the AWV project.

This Page Intentionally Left Blank

Chapter 6 REFERENCES

BERGER/ABAM Engineers. 2002. Analysis of Existing Alaskan Way Seawall. January 2003.

KJS Assoc., Inc. 1999. Washington State Ferries Systems Plan for 1999-2018, Final. June 1999.

Parsons Brinckerhoff. 2002. SR 99: Alaskan Way Viaduct Project: No Action Alternative (Existing Conditions) Report. Seattle, Washington. August 2002.

Parsons Brinckerhoff. 2003a. SR 99: Alaskan Way Viaduct & Seawall Replacement Project Draft Rebuild/Retrofit 500 Report (500-Year Design Earthquake). Seattle, Washington. April 2003.

Parsons Brinckerhoff. 2003b. SR 99: Alaskan Way Viaduct & Seawall Replacement Project Technical Memorandum: Tunnel Plan – Depth of Tunnel Study. Seattle, Washington. February 2003.

WSDOT (Washington State Department of Transportation). 2002a. Draft Flexible Transportation Package, An Integrated Program of Demand & System Management Strategies (report) December 2002. Seattle, Washington.

WSDOT (Washington State Department of Transportation). 2002b. Bridge Preservation Office, Interim In-Depth Inspection and Recommendations, July 23, 2002.

Website http://www.bigdig.com - Boston Central Artery Project Website.

Website http://www.haywardbaker.com - Hayward Baker Soil Improvements Website (includes information regarding deep soil mixing and jet grouting).

This Page Intentionally Left Blank