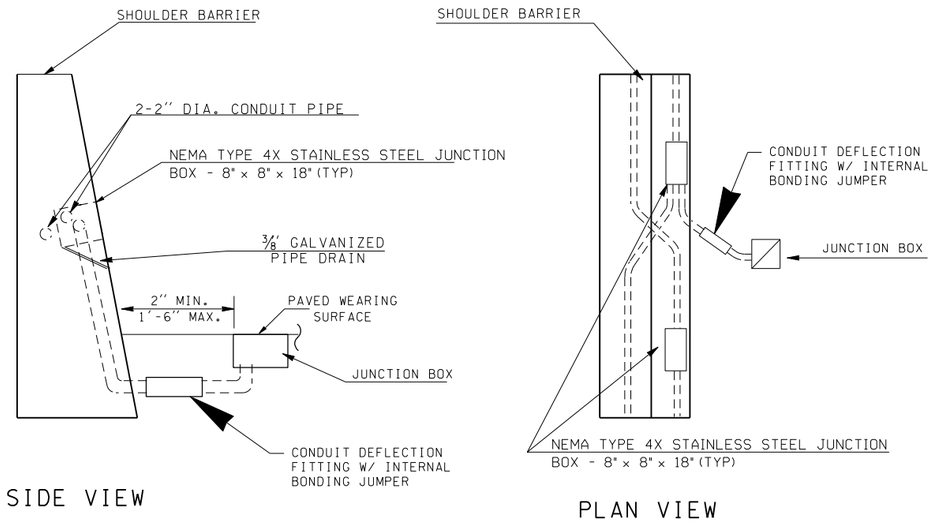

DETAIL C

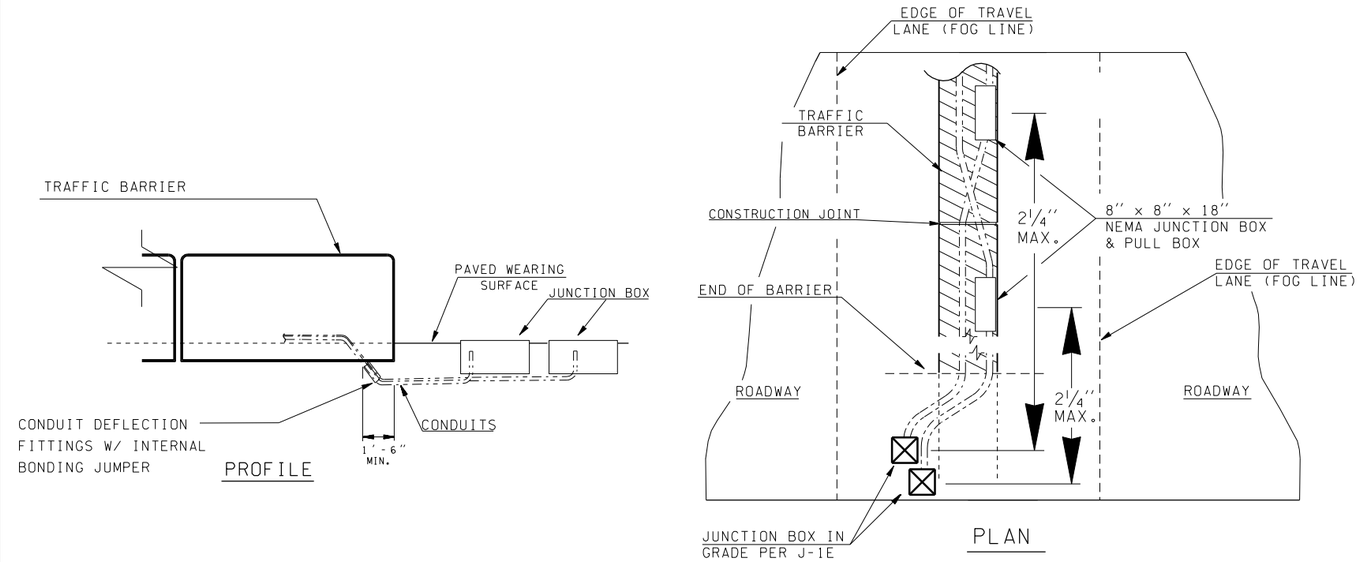

CONDUIT TRANSITION FROM BARRIER TO GRADE

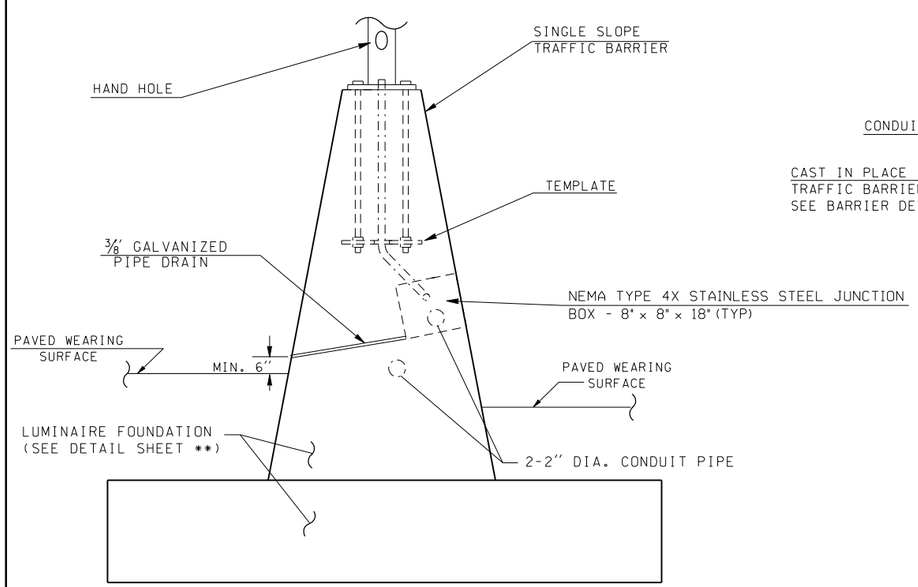

CAST IN PLACE CONC. BARRIER LIGHT STANDARD SECTION ANCHORAGE (TYPICAL)

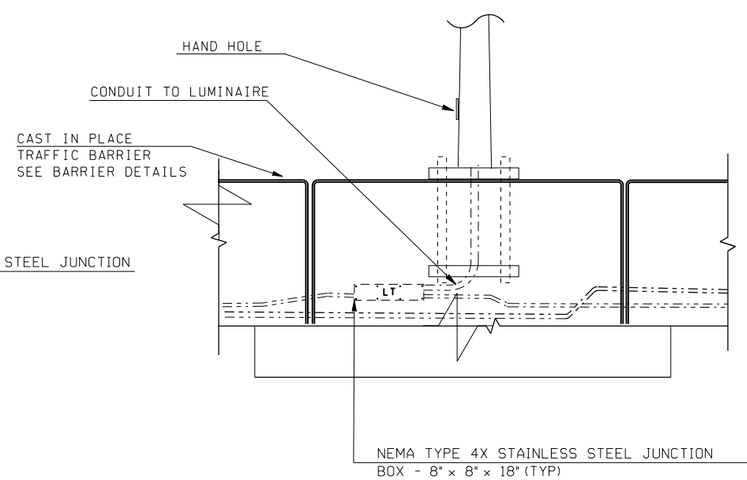

ELEVATION
TRAFFIC BARRIER WITH
CONDUIT AND JUNCTION BOX

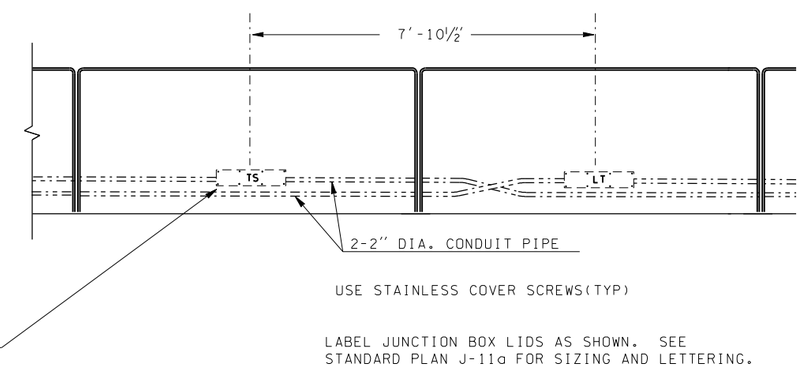

ELEVATION CONDUIT AND
JUNCTION BOX IN TRAFFIC BARRIER

FILE NAME	S:\414126\Electrical\MASTER_FILES\DETAILS Homepage\bar_tex.dgn			REGION NO.	STATE	FED.AID PROJ.NO.
TIME	02:04:19 PM			10	WASH	
DATE	04/07/2005			JOB NUMBER		
DESIGNED BY						
ENTERED BY	NEW SHEET PLACEMENT	4-15-03	JH	CONTRACT NO.		LOCATION NO.
CHECKED BY	TEXT EDITS	10-6-99	JH			
PROJ. ENGR.	NEW ENGLISH SHEET	2-9-99	JH			
REGIONAL ADM.	REVISION	DATE	BY			

DATE
P.E. STAMP BOX

DATE
P.E. STAMP BOX

Washington State Department of Transportation

BARRIER W /LT. STD.

ENGLISH

PLOT3

1.12E

SHEET **2** OF **2** SHEETS