DETAIL D

TRANSITIONAL SECTION CONCRETE BARRIER LIGHT STANDARD DETAIL

LUMINAIRE NO#	STATION
33A,33B	L 38+535

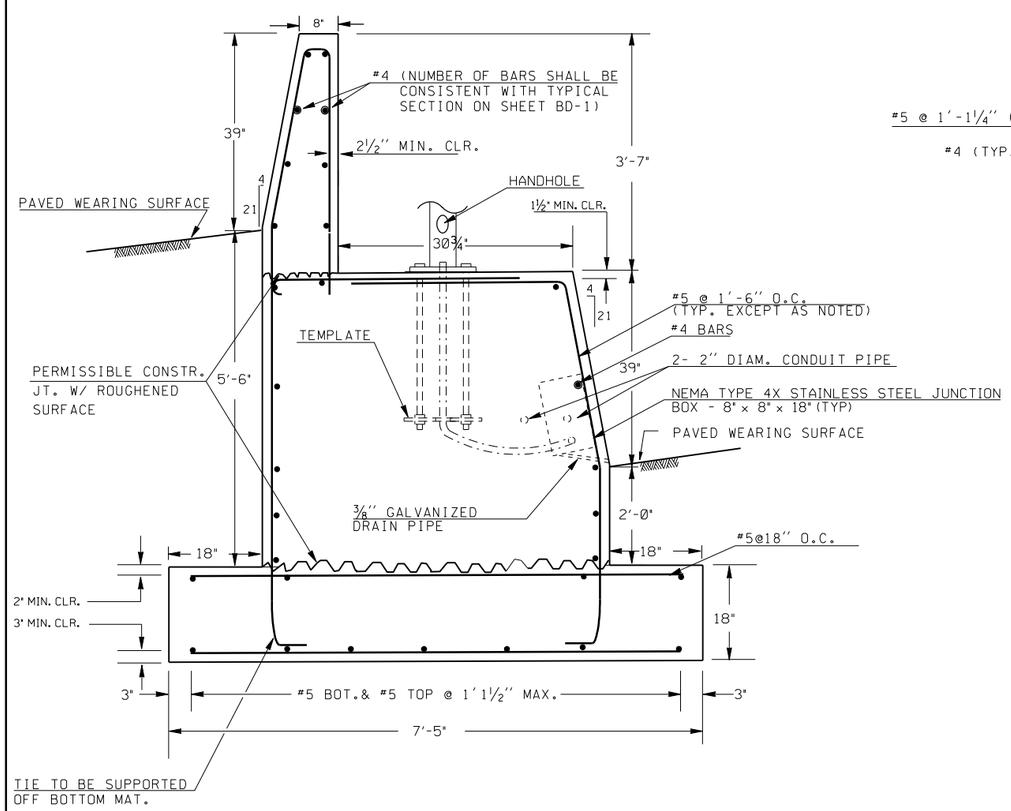

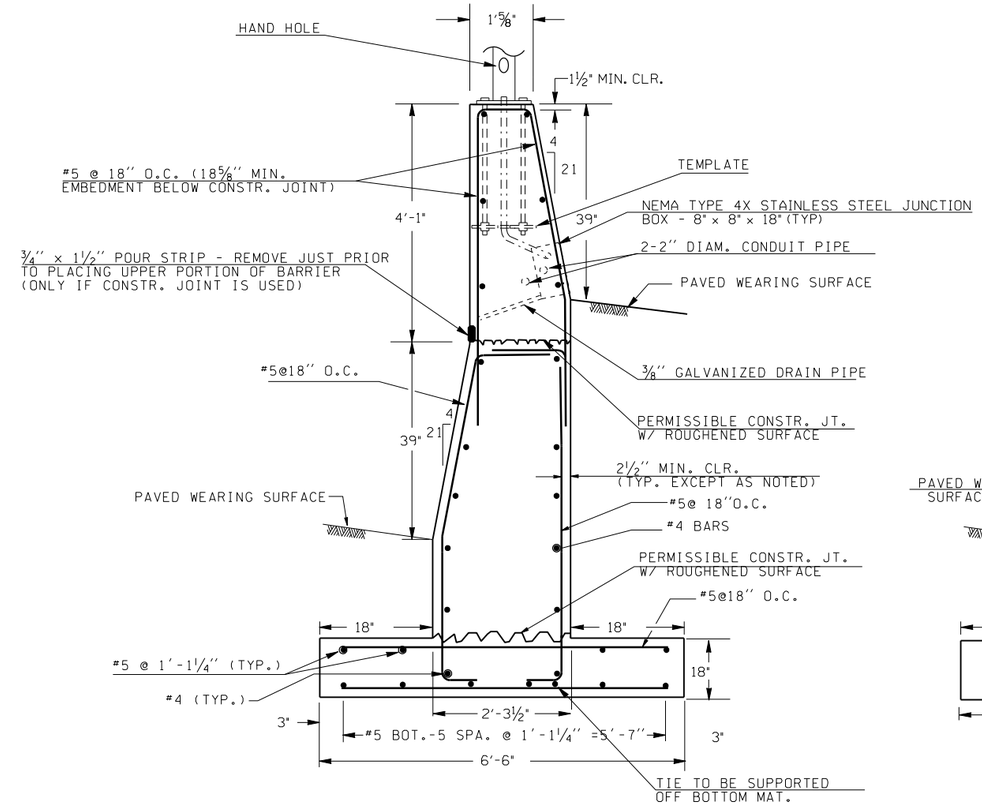

LUMINAIRE NO#	STATION
44A,44B	L 39+244

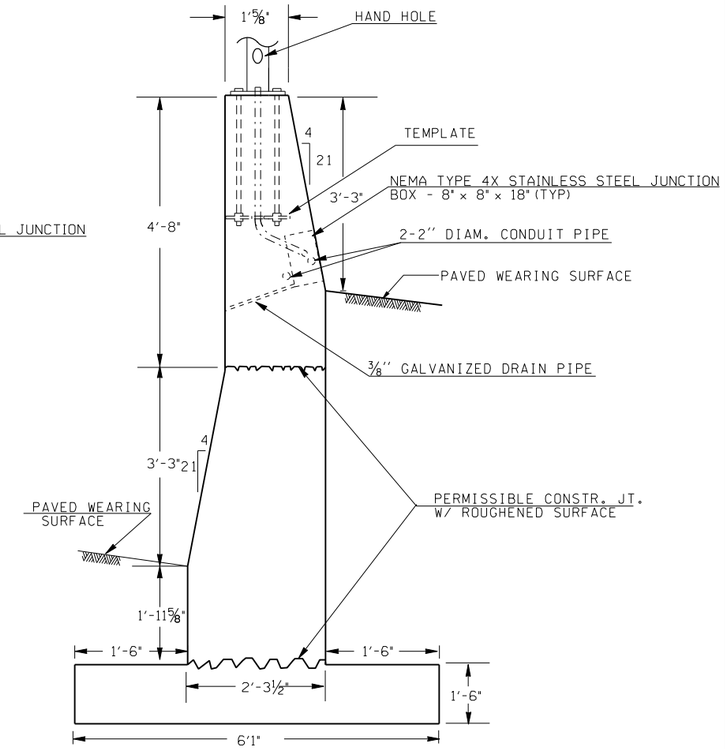

LUMINAIRE NO#	STATION
45A,45B	L 39+310

DETAIL E

ELEVATED SECTION CONCRETE BARRIER LIGHT STANDARD DETAIL

FILE NAME	S:\414126\Electrical\MASTER_FILES\DETAILS Homepage\bar_tex.dgn						
TIME	02:03:01 PM				REGION NO.	STATE	FED.AID PROJ.NO.
DATE	04/07/2005				10	WASH	
DESIGNED BY					JOB NUMBER		
ENTERED BY							
CHECKED BY		TEXT EDITS	10-6-99	JH	CONTRACT NO.		LOCATION NO.
PROJ. ENGR.		NEW ENGLISH SHEET	2-9-99	JH			
REGIONAL ADM.		REVISION	DATE	BY			

P.E. STAMP BOX DATE

P.E. STAMP BOX DATE

Washington State Department of Transportation

ILLUMINATION DETAILS

ENGLISH

PLOT1

1.10E

SHEET OF SHEETS