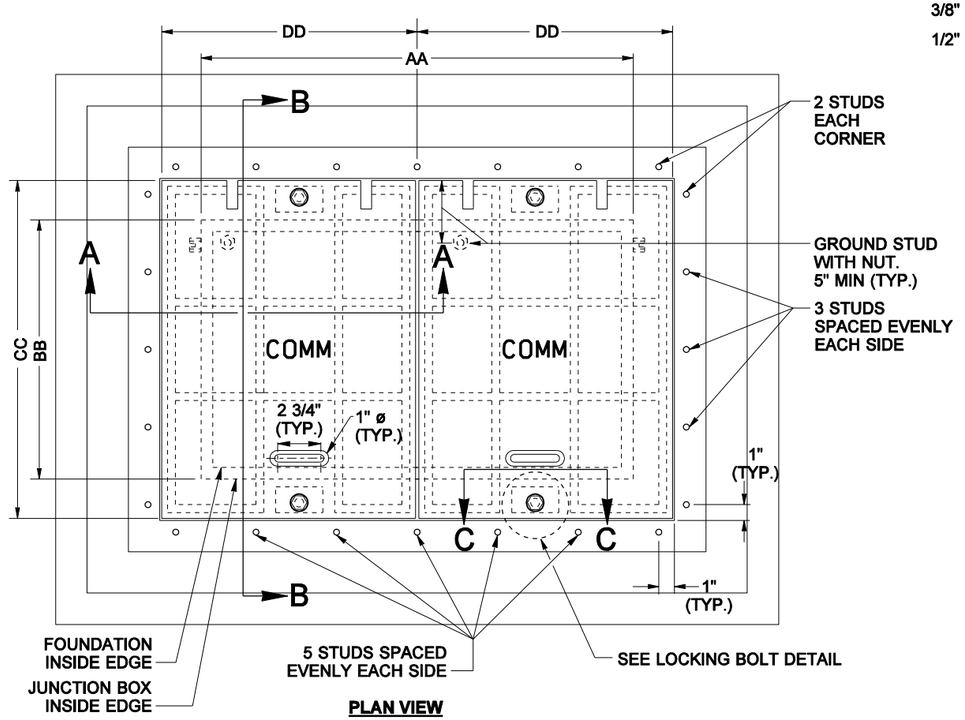

PLAN VIEW

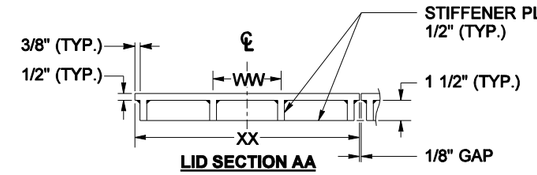

LID SECTION AA

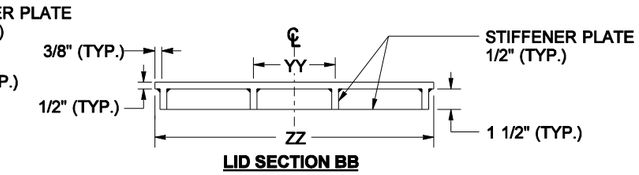

LID SECTION BB

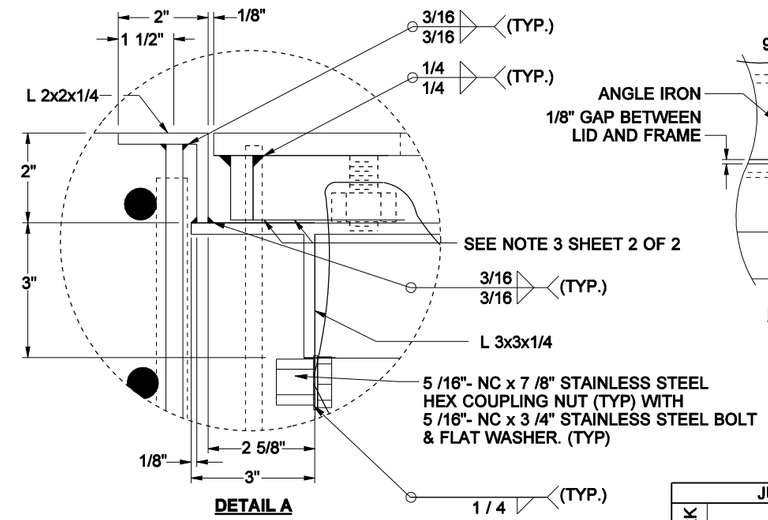

DETAIL A

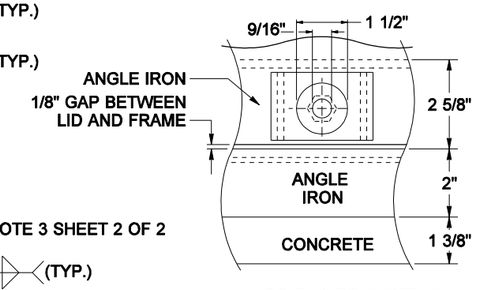

LOCKING BOLT DETAIL

JUNCTION BOX DIMENSION TABLE				
MARK	ITEM	BOX TYPE		
		4	5	6
AA	J. BOX INSIDE LENGTH	19"	28"	36"
BB	J. BOX INSIDE WIDTH	14"	17"	24"
CC	LID LENGTH (EACH SIDE)	19"	22"	29"
DD	LID WIDTH (EACH SIDE)	11 15/16"	16 7/16"	20 7/16"
WW	STIFFENER SPACING	4"	5 1/2"	6 3/4"
XX	STIFFENER LENGTH	11 15/16"	16 7/16"	20 7/16"
YY	STIFFENER SPACING	6"	7"	9 1/2"
ZZ	STIFFENER LENGTH	19"	22"	29"
CAPACITY - CONDUIT DIAMETER		6"	12"	24"

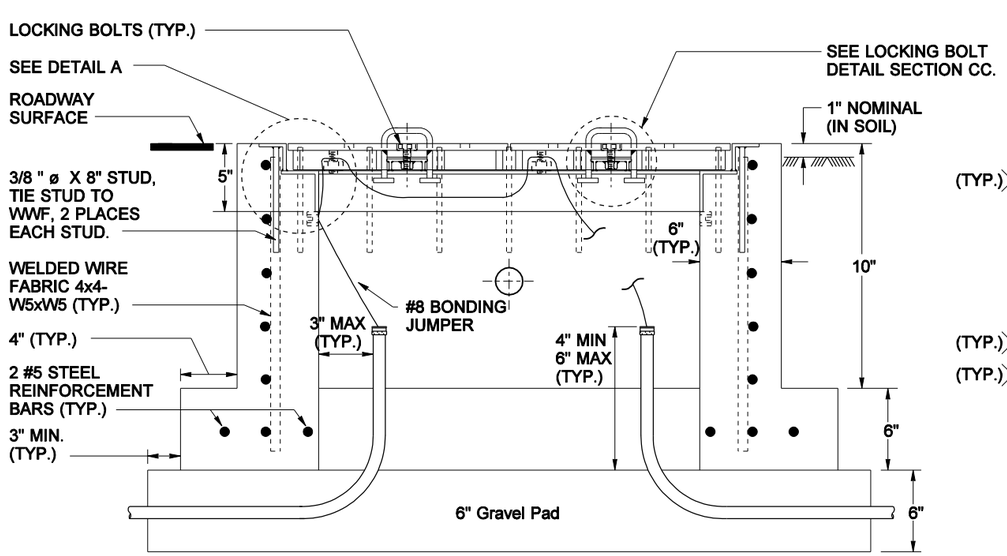

ELEVATION VIEW

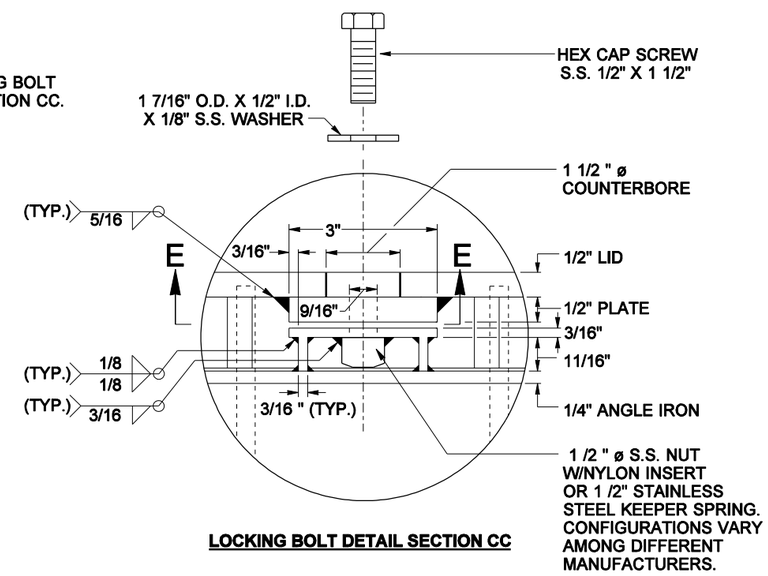

LOCKING BOLT DETAIL SECTION CC

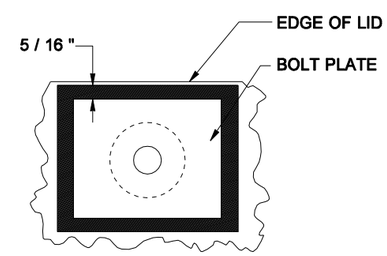

SECTION EE

HEAVY DUTY TYPE 4, 5 AND 6 JUNCTION BOX (DUAL LID)
NOT TO SCALE

FILE NAME	S:\414126\Electrical\MASTER_FILES\DETAILS Homepage\Heavydutyjb_e.dgn						
TIME	02:28:41 PM				REGION NO.	STATE	FED.AID PROJ.NO.
DATE	04/07/2005				10	WASH	
DESIGNED BY					JOB NUMBER		
ENTERED BY		RENAME JUNCTION BOX	1-11-2005	KN			
CHECKED BY		HEX COUPLING NUT, BASE CHANGE 1"	7-9-2004	JH	CONTRACT NO.		LOCATION NO.
PROJ. ENGR.		REVISIONS TO MEET LOAD REQUIREMENTS	9-20-2001	JH			
REGIONAL ADM.		REVISION	DATE	BY			

DATE
P.E. STAMP BOX

DATE
P.E. STAMP BOX

Washington State Department of Transportation

ENGLISH
HEAVY DUTY JUNCTION BOX

TYPE 4, 5 & 6 JBOX

PLOT11

6.40E

SHEET 1 OF 2 SHEETS