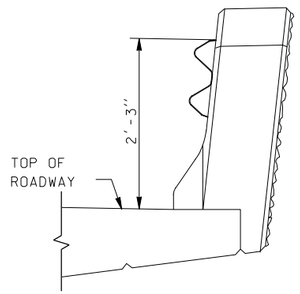

END VIEW

WBEAM SHOWN
WITH "D" CONNECTION

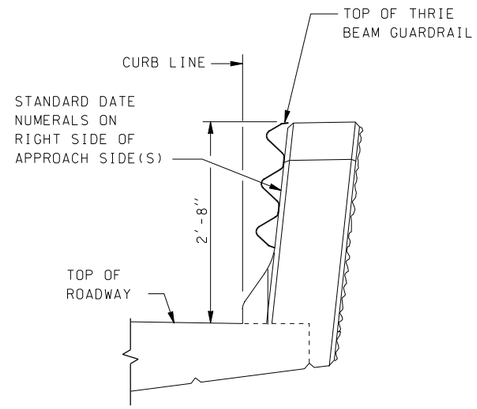

END VIEW

THRIE BEAM SHOWN
WITH "D" CONNECTION

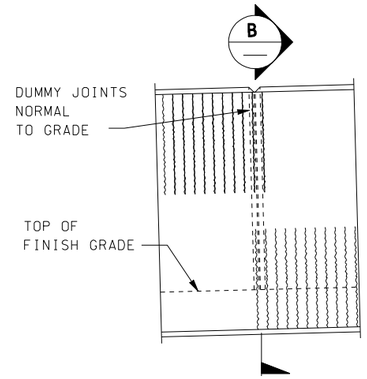

VIEW A/1

ALL CHAMFERS ¾"

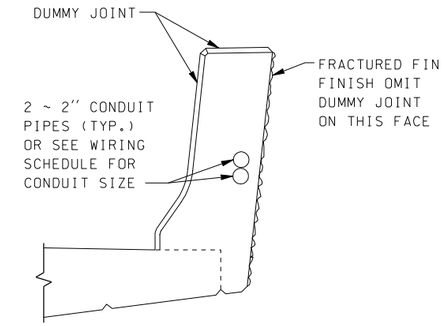

SECTION B/—

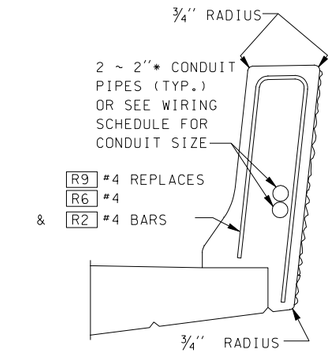

SLIPFORM ALTERNATE

SEE "TYPICAL SECTION - TRAFFIC BARRIER"
FOR ADDITIONAL DETAILS

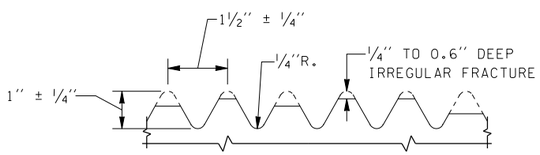

FRACTURED FIN FINISH

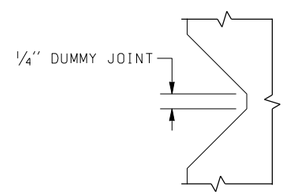

DUMMY JOINT DETAIL

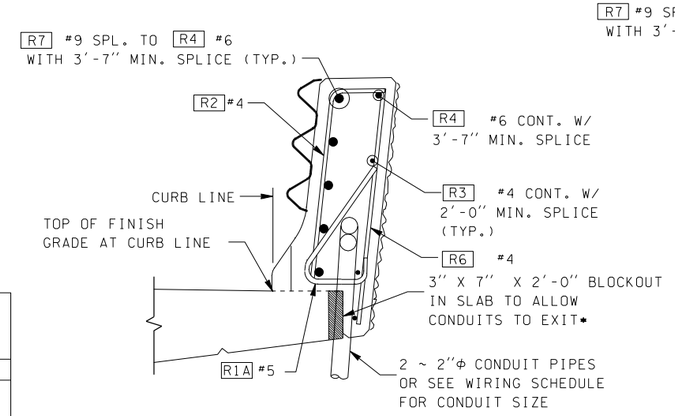

SECTION C/2 BRIDGE

FOR DETAILS NOT SHOWN SEE "OUTSIDE ELEVATION"
AND "TYPICAL SECTION - TRAFFIC BARRIER"

* BLOCKOUT WIDTH MAY BE INCREASED TO 6" TO ALLOW CONDUITS OF A LARGER DIAMETER THAN 2" TO EXIT BARRIER OR WALL WITHOUT REBAR STEEL CONFLICT

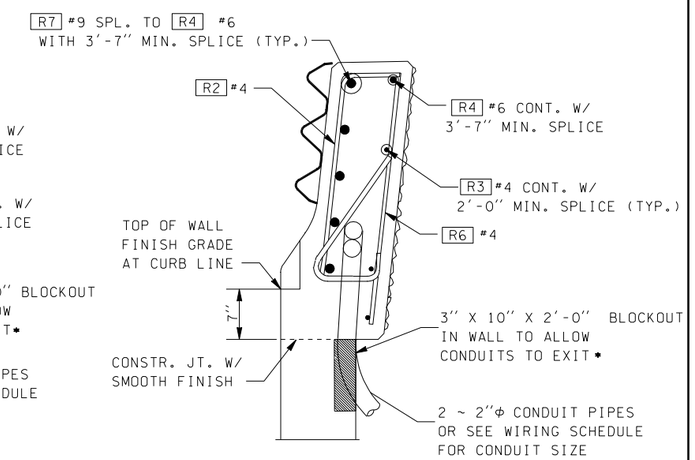

SECTION C/2 WALL

DETAIL FOR RETAINING WALL OR
WINGWALL. FOR REINFORCING NOT
SHOWN SEE STD. PLAN D-1a & D-1b
OR WINGWALL PLAN. FOR DETAILS
NOT SHOWN SEE SECTION C/— BRIDGE

JUNCTION BOX LOCATIONS

STATION	OFFSET

TRAFFIC BARRIER BAR LIST

ALL REINFORCING SHALL BE AASHTO M31, GR. 60.

MARK	SIZE	LENGTH	BENDING DIAGRAM (ALL DIMENSIONS ARE OUT TO OUT)
R1	5	3'-8"	
R1A	5	(A)	
R2	4	2'-11"	
R2A	4	3'-5"	
R3	4	(A)	STR.
R4	6	(A)	STR.
R6	4	3'-0"	STR.
R7	9	14'-0"	STR.
R9	4	5'-11"	

(A) DETERMINE FROM PLANS

FOR W1 & W2 BARS SEE WINGWALL
OR RETAINING WALL PLANS.
FOR S1 & S2 BARS SEE BARLIST

≠ DIMENSIONS TO POINTS OF INTERSECTION

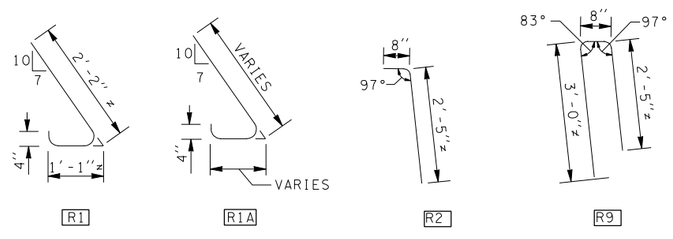

FILE NAME	S:\414126\Electrical\MASTER_FILES\DETAILS Homepage\barcondjb.dgn				
TIME	02:07:39 PM			REGION NO. 10	STATE WASH
DATE	04/07/2005				FED.AID PROJ.NO.
DESIGNED BY				JOB NUMBER	
ENTERED BY					
CHECKED BY		NEW SHEET PLACEMENT	4-15-03	JH	CONTRACT NO. / LOCATION NO.
PROJ. ENGR.		NEW BARRIER SHEET	4-4-01	JH	
REGIONAL ADM.		REVISION	DATE	BY	

DATE
P.E. STAMP BOX

DATE
P.E. STAMP BOX

Washington State
Department of Transportation

STANDARD
TRAFFIC BARRIERS
ENGLISH

TYPE F – TRAFFIC BARRIER

PLOT2

1.02E

SHEET 2 OF 3 SHEETS