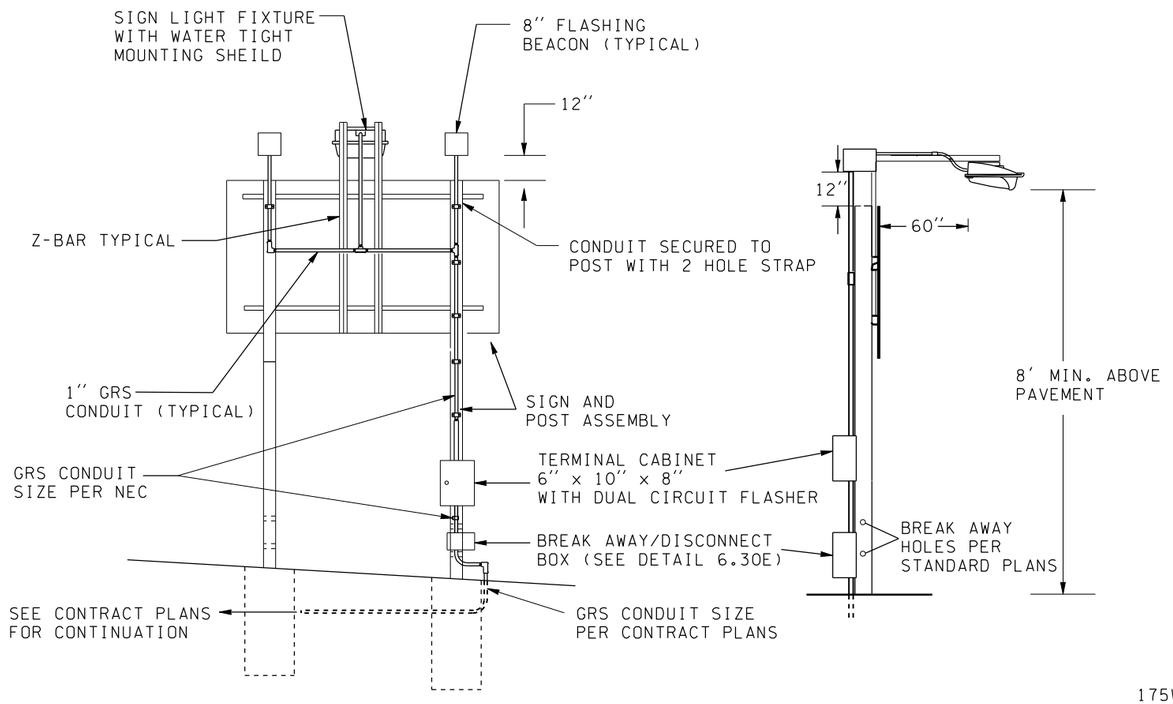

FLASHING BEACON/SIGN LIGHT DETAIL

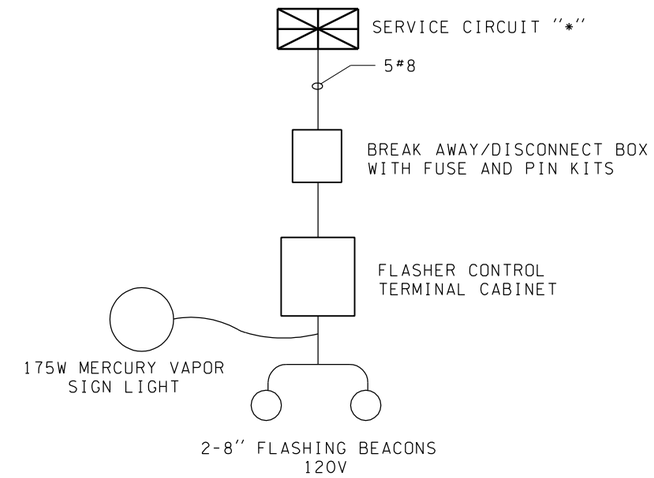

WIRING/SCHEMATIC DIAGRAM

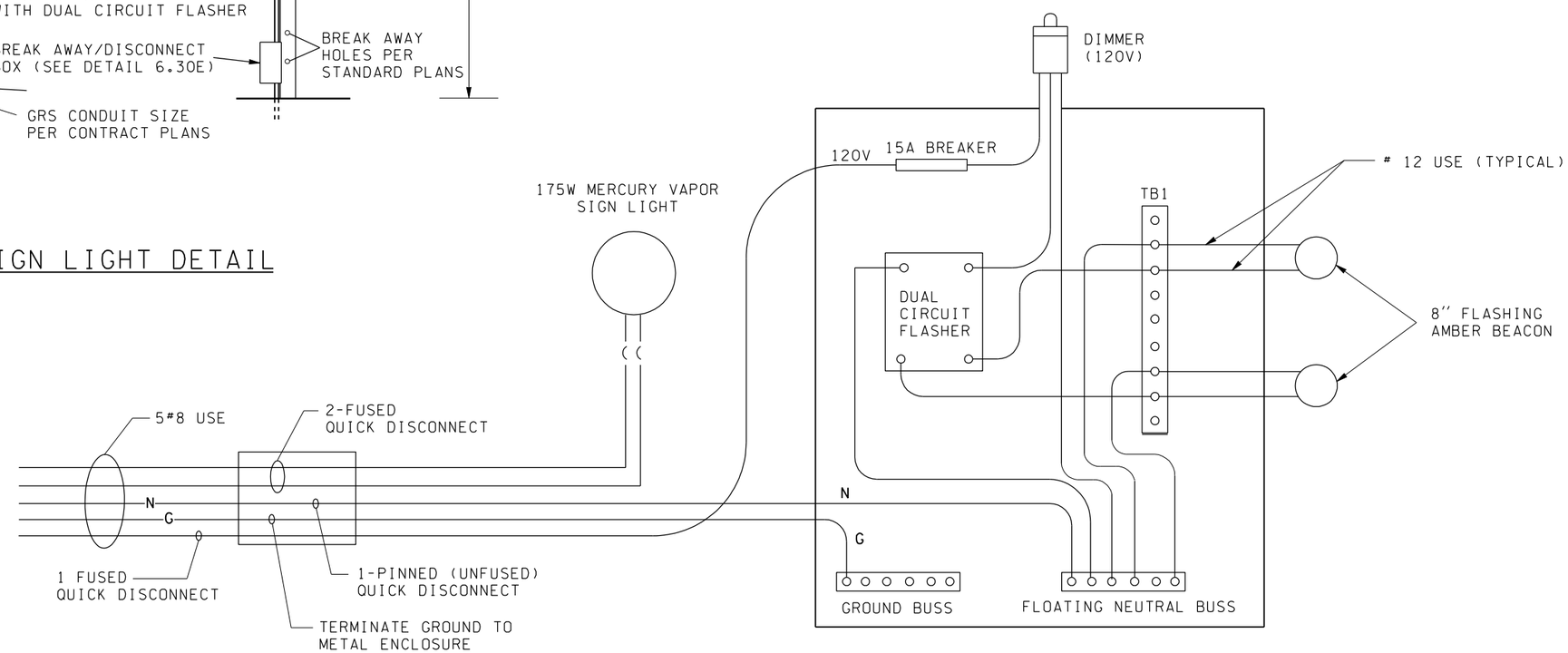

NOTE:

SEE PLANS FOR SIGN LIGHT VOLTAGE.

FILE NAME	S:\414126\Electrical\MASTER_FILES\DETAILS Homepage\flashing_beacon.dgn						
TIME	02:26:06 PM				REGION NO. 10	STATE WASH	FED.AID PROJ.NO.
DATE	04/07/2005				JOB NUMBER		
DESIGNED BY							
ENTERED BY							
CHECKED BY					CONTRACT NO.		LOCATION NO.
PROJ. ENGR.		SIGN LIGHTER VOLT TO 240V/480V	10-06-03	KN			
REGIONAL ADM.		REVISION	DATE	BY			

P.E. STAMP BOX DATE

P.E. STAMP BOX DATE

Washington State Department of Transportation

ENGLISH

FLASHING BEACON DETAIL

PLOT1

2.08E

SHEET 1 OF 1 SHEETS