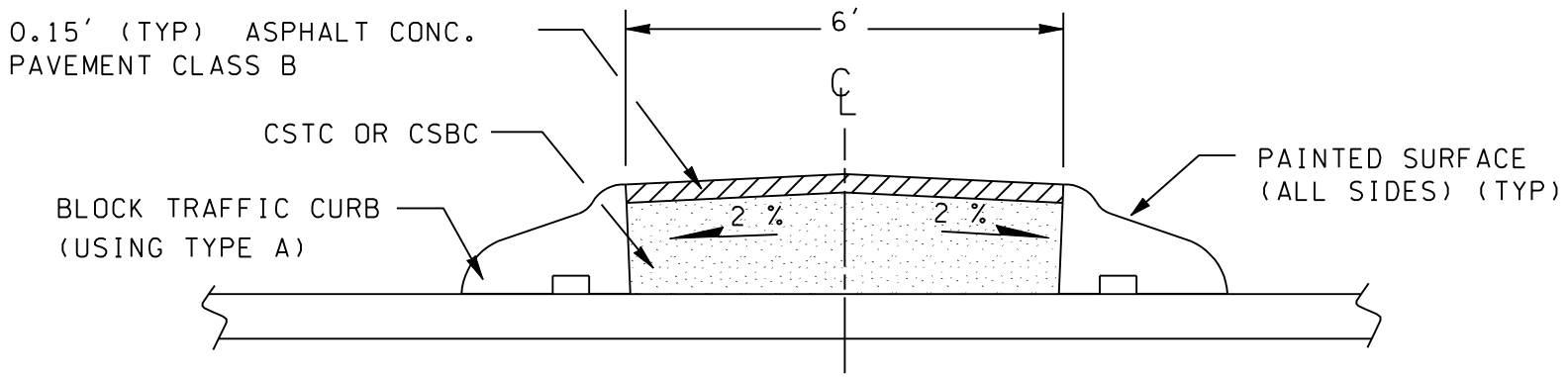

MOUNTABLE K-CURB DETAIL

FOR ROADWAY MEDIANS NOT TO SCALE