PLOT1 S:\041401\2\KDDelectrical\MASTER_FILES\DETAILS Homepage\signpost.dgn

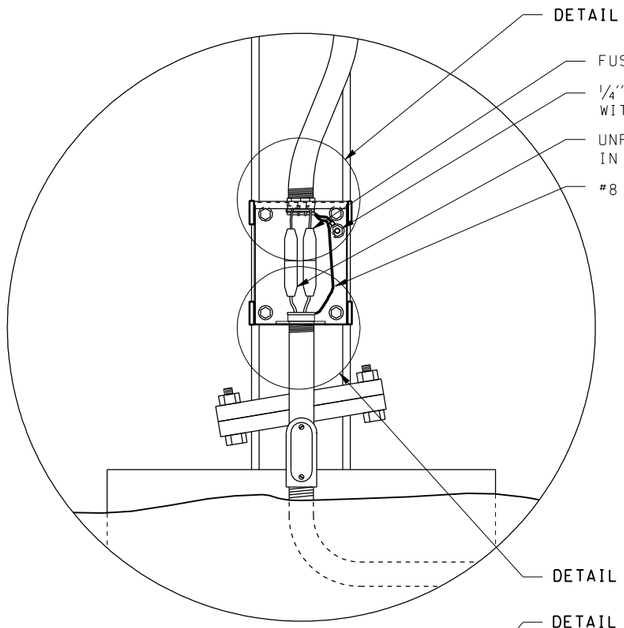

METAL POST
A-A

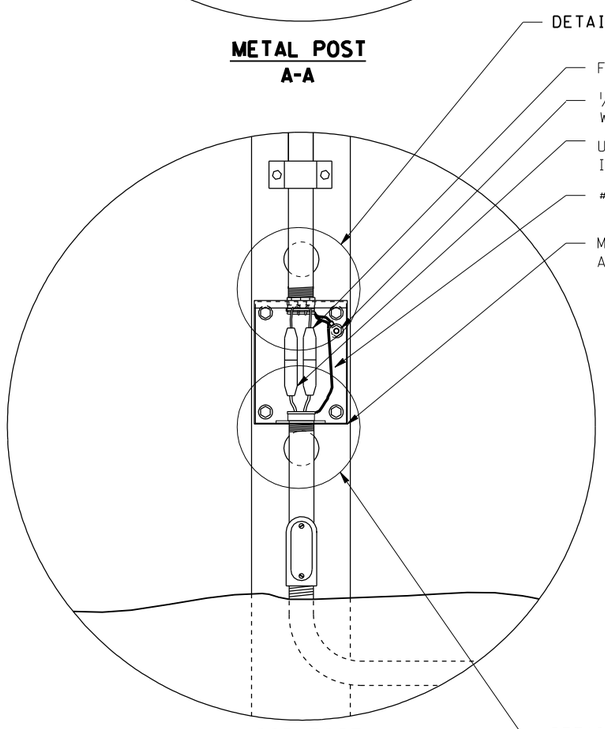

WOOD POST
A-A

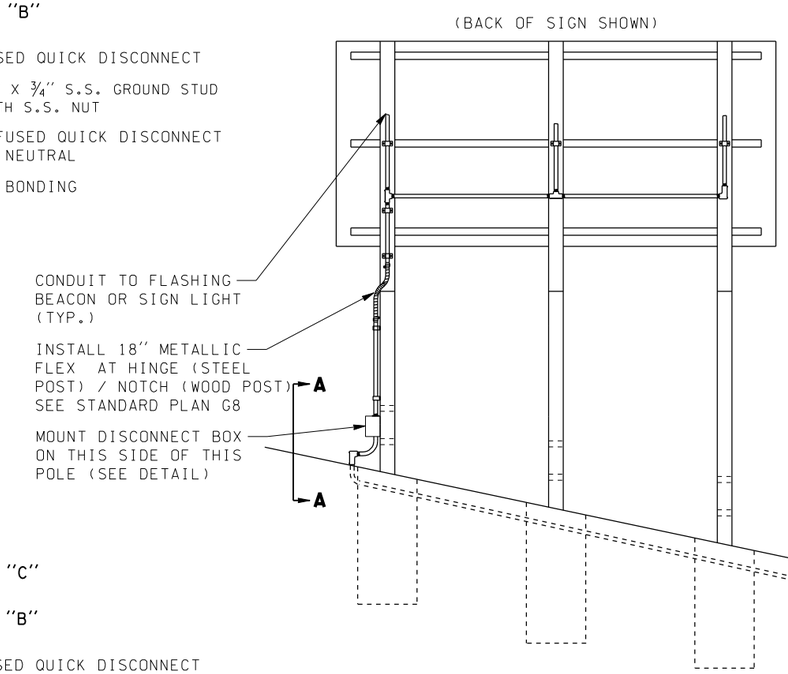

NOTES:

1. SEE SIGNING PLAN SHEETS FOR NUMBER OF POSTS.
2. MOUNT DISCONNECT BOX ON POST FARTHEST FROM ROADWAY.

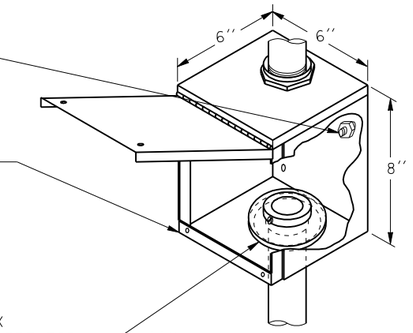

JUNCTION BOX

DETAIL "B"

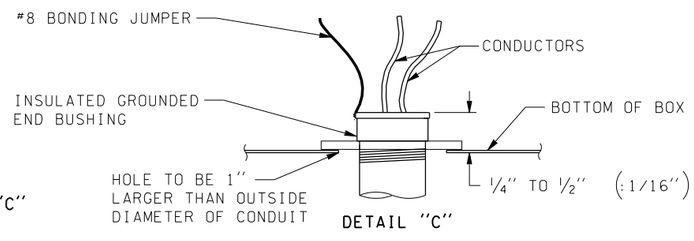

DETAIL "C"

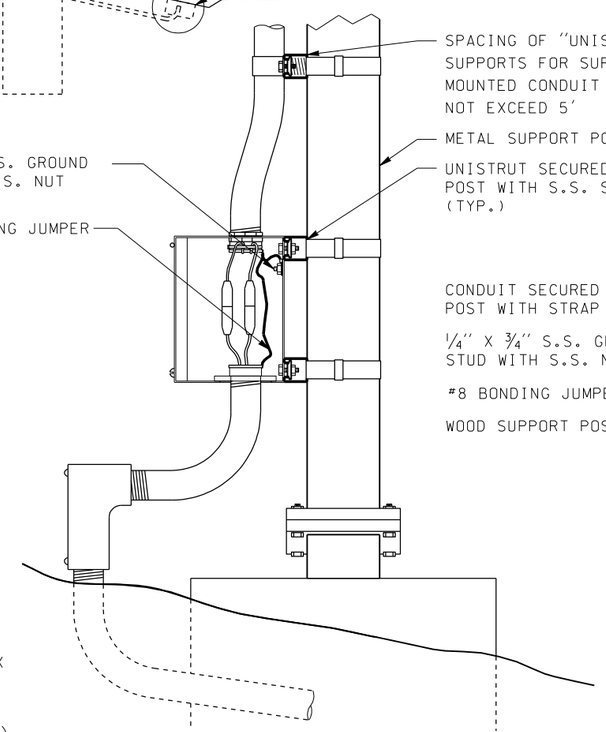

METAL POST

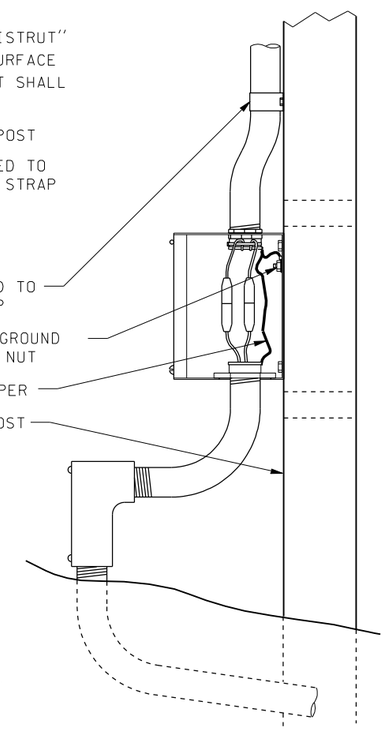

WOOD POST

SIGN POST MOUNTED JUNCTION BOX DETAILS

NOT TO SCALE

					REGION NO.	STATE	FED.AID PROJ.NO.
DESIGNED BY WSDOT					10	WASH	
ENTERED BY WSDOT		11-15-00	CONDULET TO 18" METALLIC FLEX	JH			
CHECKED BY WSDOT		7-9-99	QUICK FUSE/ BOND JUMPER/WTIGHT FIT	JH	JOB NUMBER		
PROJ. ENGR.		7-7-97	ADDED GASKET	BK			
REGIONAL ADM.	4-12-95	3-6-97	UPDATED JUNCTION BOX	BK	CONTRACT NO.		
	DATE	DATE	REVISION	BY			

ENVIRONMENTAL AND ENGINEERING SERVICE CENTER

Washington State Department of Transportation

ENGLISH

SIGN POST MOUNTED JUNCTION BOX

6.30E

SHEET OF SHEETS