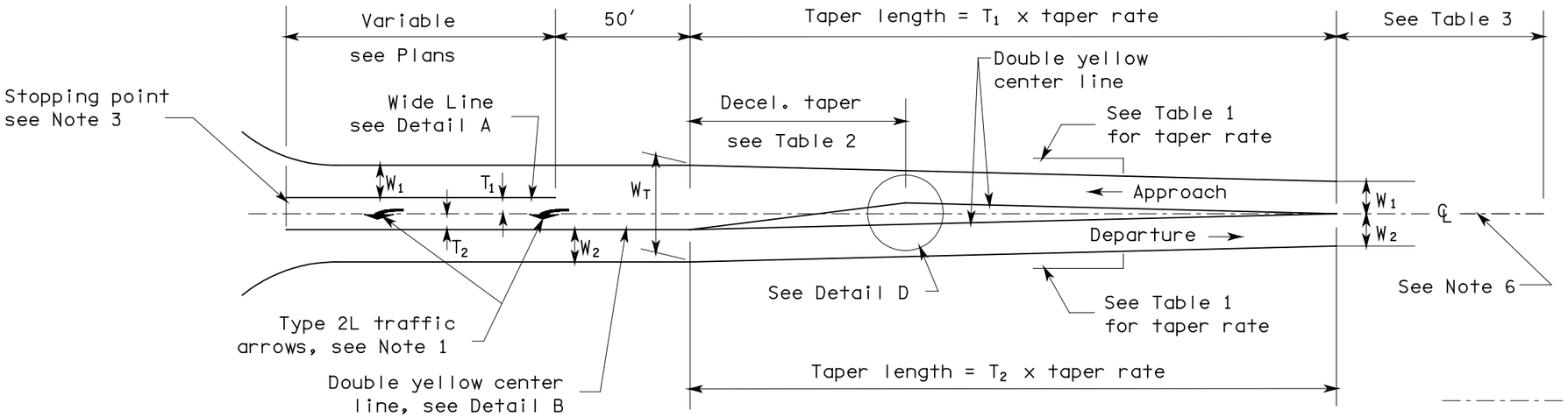

LEFT TURN LANE

NOTES:

1. First Type 2L arrow is installed 50′ back of stop bar or crosswalk. Second arrow is located 100′ back, or at left turn pocket.
2. "S" = 140′ for posted speed < 50 MPH.
   "S" = 170′ for posted speed ≥ 50 MPH.
3. Stopping point shall be marked with stop bar only when mainline movement is controlled by a stop sign or traffic signal.
4. Raised pavement markers shall be installed only when specified in the Contract Plans.
5. See Standard Plan H-3 for marker designation.
6. No Pass Line on approach side with skip center line on departure side unless Double Yellow Center Line is required in the contract.

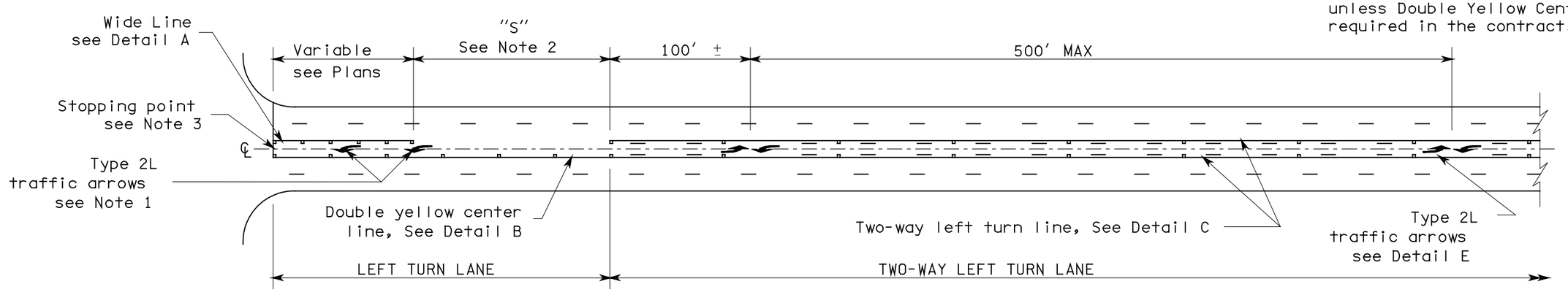

TWO-WAY LEFT TURN LANE

TABLE 1	
Posted Speed	Taper Rate
60 mph	60:1
55 mph	55:1
50 mph	50:1
45 mph	45:1
40 mph	40:1
35 mph	35:1
30 mph	30:1
25 mph	25:1

TABLE 2	
Posted Speed	Decel. Taper Length
60 mph	180′
55 mph	165′
50 mph	150′
45 mph	135′
40 mph	120′
35 mph	105′
30 mph	90′
25 mph	75′

TABLE 3	
Posted Speed	No pass length (Minimum)
60 mph	790′
55 mph	725′
50 mph	660′
45 mph	590′
40 mph	360′
35 mph	260′
30 mph	200′
25 mph	150′

W_1 = Approaching through lane

W_2 = Departing lane

T_1 = Width of left turn lane on approach side of ℄

T_2 = Width of left turn lane on departure side of ℄

W_T = Total width of channelization ($W_1 + W_2 + T_1 + T_2$)

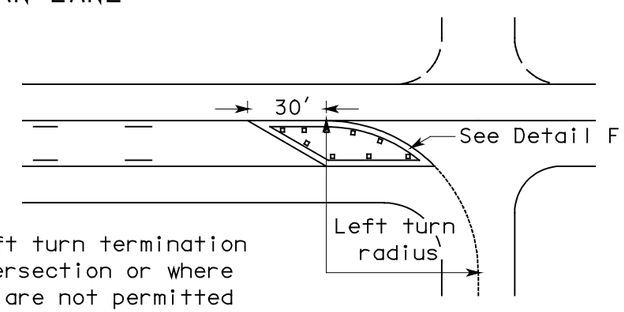

Two way left turn termination at tee intersection or where left turns are not permitted and two way left turn is not continued beyond intersection.

END TWO-WAY LEFT TURN LANE

TOBY D. RICKMAN
STATE OF WASHINGTON
24655
REGISTERED
PROFESSIONAL ENGINEER

EXPIRES OCTOBER 26, 2000

PAVEMENT MARKING DETAILS

STANDARD PLAN H-3a

SHEET 1 OF 2 SHEETS

NOTE: THIS PLAN IS NOT A LEGAL ENGINEERING DOCUMENT BUT AN ELECTRONIC DUPLICATE. THE ORIGINAL, SIGNED BY THE ENGINEER AND APPROVED FOR PUBLICATION, IS KEPT ON FILE AT THE WASHINGTON STATE DEPARTMENT OF TRANSPORTATION. A COPY MAY BE OBTAINED UPON REQUEST.

DATE	REVISION	BY
5/00	CHANGE "GORE STRIPE" TO "WIDE LINE". CHANGE WIDE TRAFFIC ARROWS TO NARROW TRAFFIC ARROWS. ADDED 60 mph TO TABLE 1, 2, AND 3. NOTE 6 ADDED.	TWS

APPROVED FOR PUBLICATION

Clifford E. Mansfield 6/23/00

DEPUTY STATE DESIGN ENGINEER — DATE

WASHINGTON STATE DEPARTMENT OF TRANSPORTATION
OLYMPIA, WASHINGTON

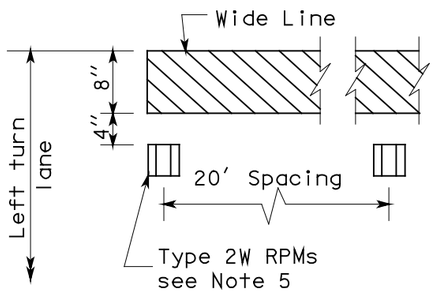

DETAIL A

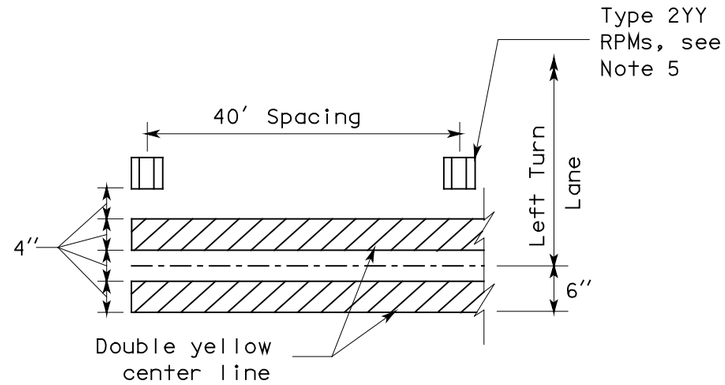

DETAIL B

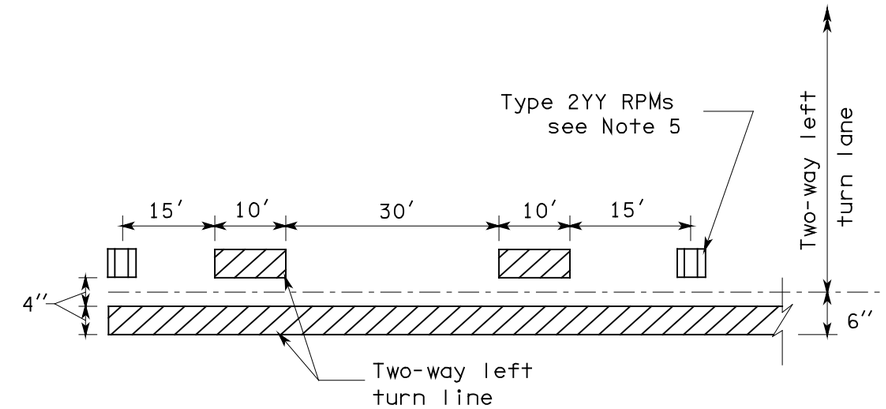

DETAIL C

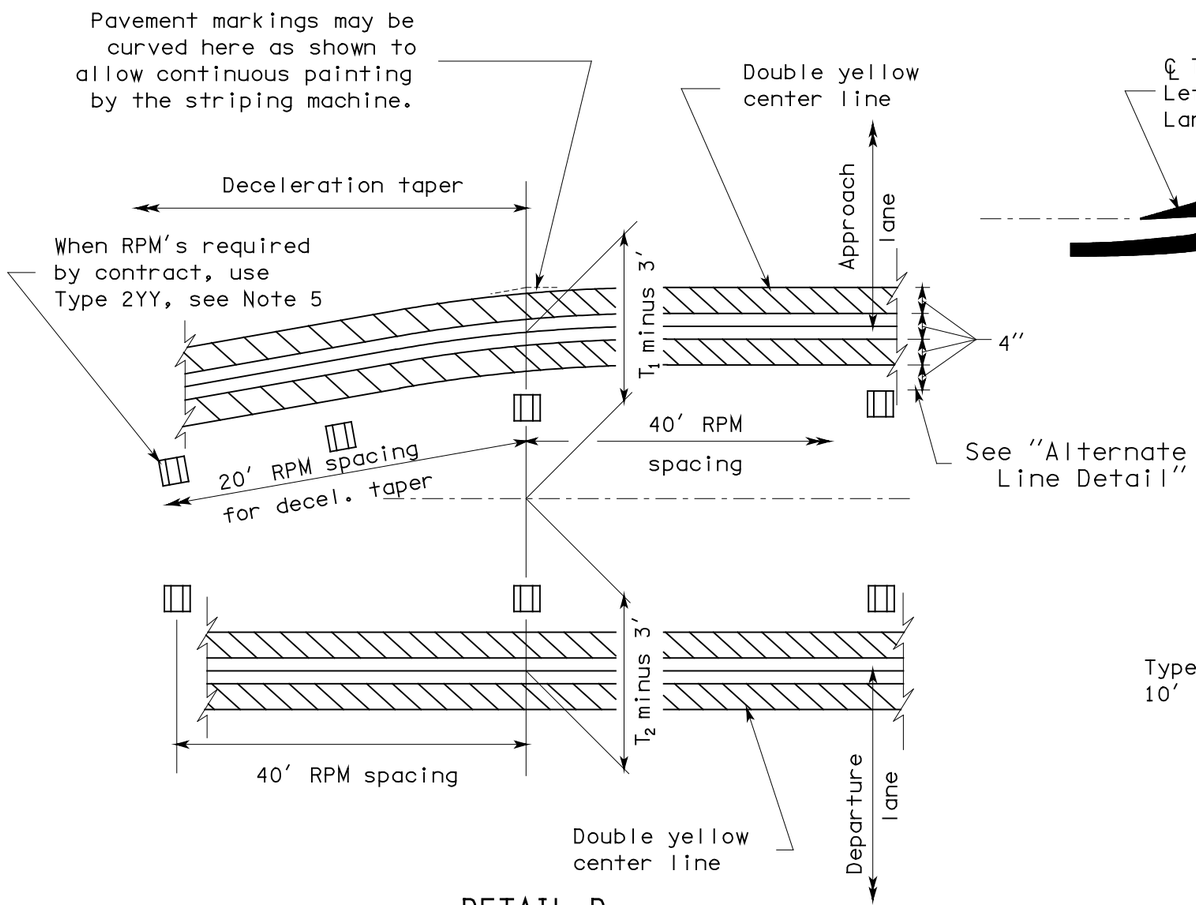

DETAIL D

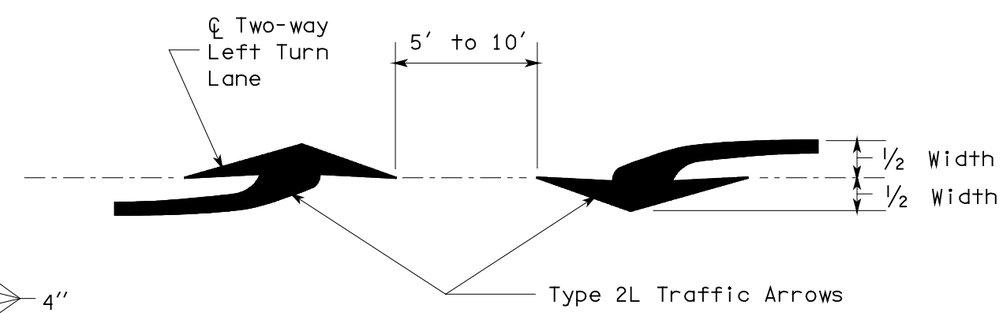

DETAIL E

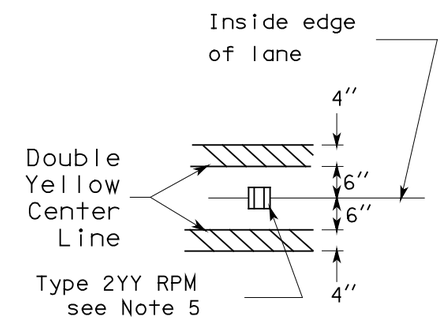

ALTERNATE
LINE DETAIL

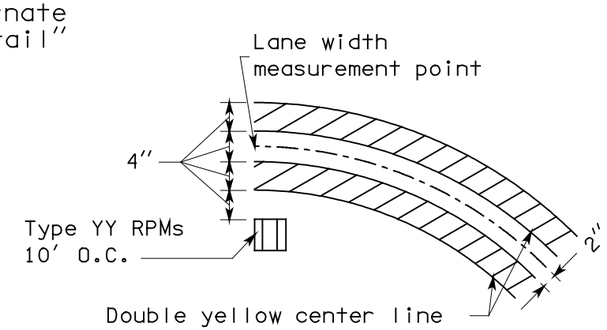

DETAIL F

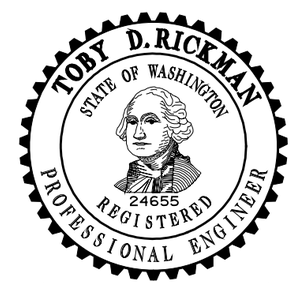

EXPIRES OCTOBER 26, 2000

PAVEMENT MARKING DETAILS

STANDARD PLAN H-3a

SHEET 2 OF 2 SHEETS

NOTE: THIS PLAN IS NOT A LEGAL ENGINEERING DOCUMENT BUT AN ELECTRONIC DUPLICATE. THE ORIGINAL, SIGNED BY THE ENGINEER AND APPROVED FOR PUBLICATION, IS KEPT ON FILE AT THE WASHINGTON STATE DEPARTMENT OF TRANSPORTATION. A COPY MAY BE OBTAINED UPON REQUEST.

DATE	REVISION	BY
5/00	CHANGED "GORE STRIPE" TO "WIDE LINE". CHANGED WIDE TRAFFIC ARROWS TO NARROW TRAFFIC ARROWS.	TWS

APPROVED FOR PUBLICATION

Clifford E. Mansfield 6/23/00

DEPUTY STATE DESIGN ENGINEER — DATE

WASHINGTON STATE DEPARTMENT OF TRANSPORTATION
OLYMPIA, WASHINGTON