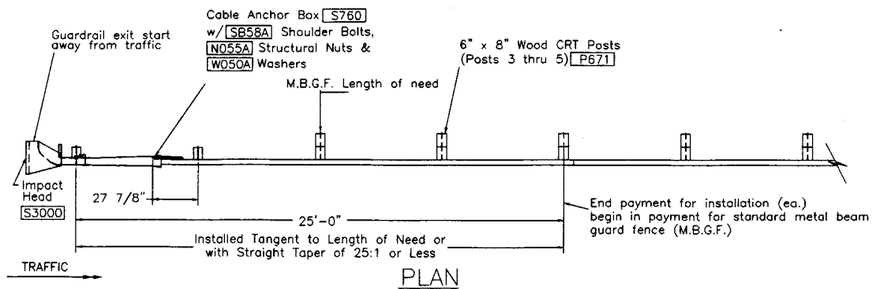

PLAN

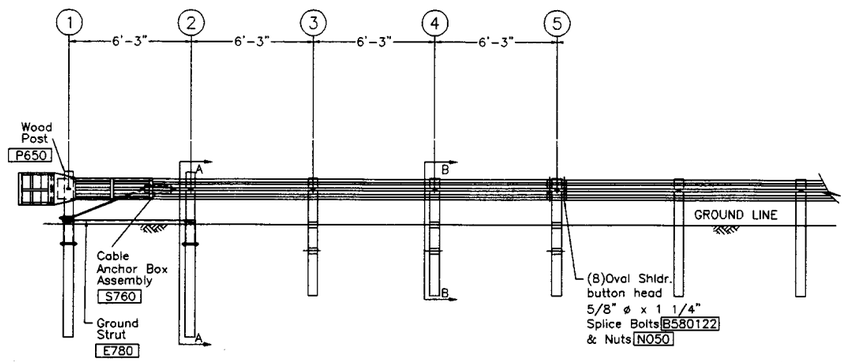

ELEVATION

GENERAL NOTES

1. Breakaway posts are required with the Sequential Kinking Terminal
2. All bolts, nuts, cable assemblies, cable anchors and bearing plates shall be galvanized.
3. When the Sequential Kinking Terminal is selected as the end treatment for MBGF installation, the SKT can be flared at a rate of 25:1 to prevent the impact head from encroaching on the shoulder. The flare is not required and may be decreased or eliminated for specific installations.
4. The soil tube shall not protrude more than 4" above ground (measured along a 5' cord). Site grading may be necessary to meet this requirement.
5. The soil tubes may be driven with an approved driving head. They shall not be driven with the post in the tube. If the soil tubes are placed in drilled holes, the backfill material must be satisfactorily compacted to prevent settlement.
6. When rock is encountered during excavation, a 12"ø post hole, 20" deep may be used if approved by the engineer. Granular material will be placed in the bottom of the hole approx. 2 1/2" deep to provide drainage. The soil tubes will be field cut to length, placed in the hole and backfilled with adequately compacted material excavated from the hole.
7. The breakaway cable assembly must be taut. A locking device, (vice grips or channel lock pliers) should be used to prevent the cable from twisting when tightening nuts.
8. A special site evaluation should be considered prior to using the Sequential Kinking Terminal where there is less than 25' between the outlet side of the Sequential Kinking Terminal and any adjacent driving lane.
9. The wood blockouts should be "toe nailed" to the rectangular wood posts to prevent them from turning when the wood shrinks.

ITEM NO.	QTY	BILL OF MATERIALS
S3000	1	IMPACT HEAD
S1303/S1305	1	W-BEAM GUARDRAIL END SECTION, 12 ga., 12.5' or 25'
G1203	1/0	W-BEAM GUARDRAIL, 12 GA., 12.5' or 25'
S730	2	*FOUNDATION SOIL TUBE, 6" x 8" x 6'-0"
E740	1	PIPE SLEEVE
E750	1	BEARING PLATE, 8" x 8" x 5/8"
S760	1	CABLE ANCHOR BOX
E770	1	BCT CABLE ANCHOR ASSEMBLY
E780	1	GROUND STRUT
P650	2	5.5" x 7.5" x 45" WOOD POST
P671	3	6" x 8" x 6'-0" WOOD CRT POST
P675	3	6" x 8" x 14" TIMBER BLOCKOUT
		HARDWARE
B580122	8/16	5/8"ø x 1 1/4" SPLICE BOLT
B580754	2	5/8"ø x 7 1/2" HEX BOLT
B581004	2	5/8"ø x 10" HEX BOLT
B581002	1	5/8"ø x 10" H.G.R. BOLT (POST 2 ONLY)
B581802	3	5/8"ø x 18" H.G.R. BOLT (POSTS 3 THRU 5)
N050	16/24	5/8"ø H.G.R. NUT (SPLICE 8/16, SOIL TUBE 2, STRUT 2, POST 2, 1; POSTS 3 THRU 5, 3.)
W050	8	H.G.R. WASHER
N100	2	1" ANCHOR CABLE HEX NUT
W100	2	1" ANCHOR CABLE WASHER
E350	2	3/8" x 3" LAG SCREW
SB58A	8	CABLE ANCHOR BOX SHOULDER BOLT
N055A	8	1/2" A325 STRUCTURAL NUT
W050A	16	1 1/16" OD X 9/16" ID A325 STR. WASHER

Foundation Tube Options For Posts 1 & 2

*6'-0" Split Foundation Tube S730
*6'-0" Solid Foundation Tube E731
*5'-0" Foundation Tube S735 W/Soil Plate SP600
*4'-6" Foundation Tube E735 W/Soil Plate SP600

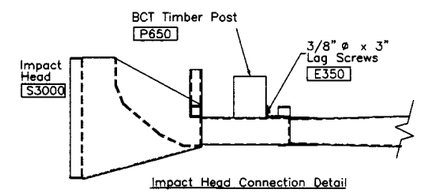

Impact Head Connection Detail

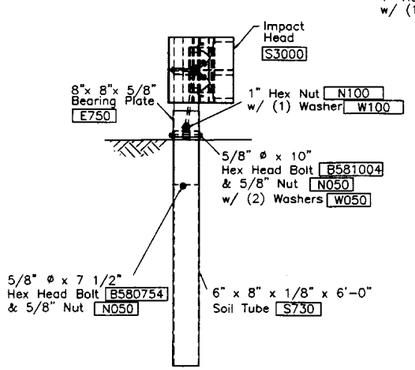

FRONT VIEW OF POST 1

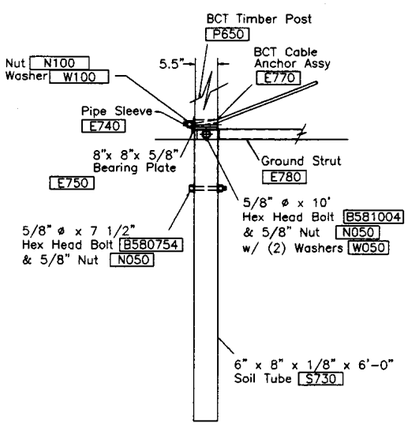

PARTIAL VIEW OF POST 1

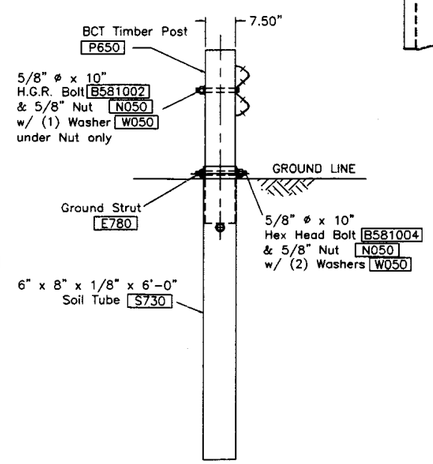

SECTION A-A
at Post #2

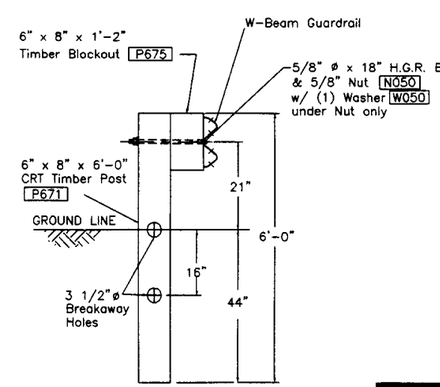

SECTION B-B
typical @ Post 3 thru 5

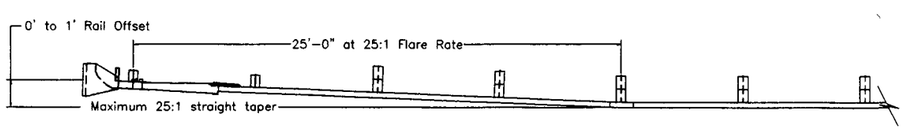

DETAIL A
optional flared installation, 25:1 maximum flare rate.

WASHINGTON STATE DEPARTMENT OF TRANSPORTATION

☒ Approved
☐ Approved with revision
☐ Rejected

BY: [signature]
DATE: 5/1/00

TL-2 SEQUENTIAL KINKING TERMINAL
(SKT-350) ASSEMBLY
2 FOUNDATION TUBE OPTION

DRAWN/REVISED BY	DATE REVISED	DWG NO.	PG	OF
LS/SML	01/03/00	SKT-W-TL2-2US	1	1

ROAD SYSTEMS INC.
BIG SPRING, TX.
(915)-263-2435 or (815)-464-5917