Investigation of Premature Strip Seal Joint Failures and Recommendations for Assuring Proper Strip Seal Joint Installation: Bridge 5/104W

WA-RD 858.1

Craig Boone

August 2015

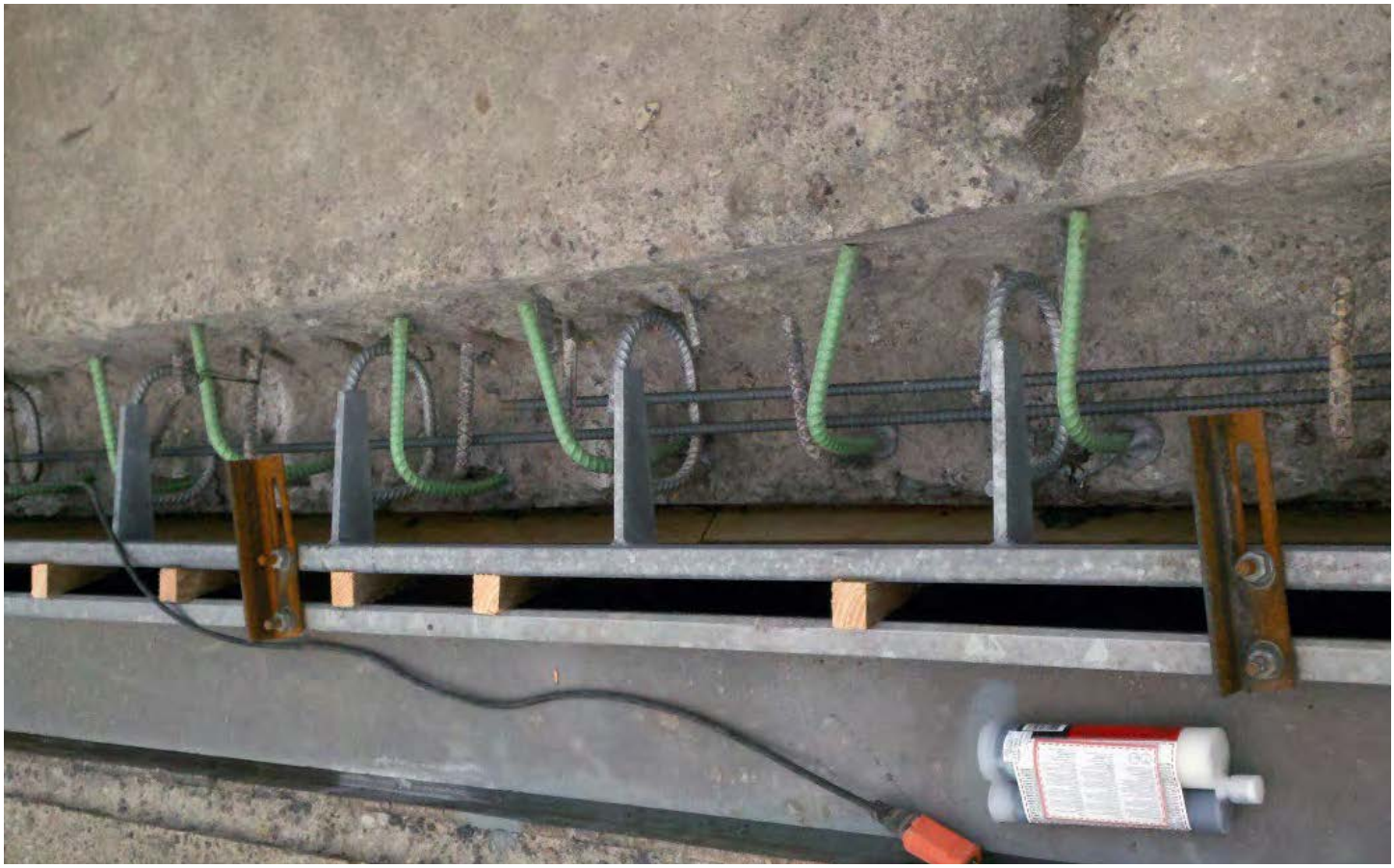

Washington State Department of Transportation

Office of Research & Library Services

WSDOT Research Report

16-08-0321

Special Project Investigation

1. REPORT NO.	2. GOVERNMENT ACCESSION NO.	3. RECIPIENT'S CATALOG NO.
WA-RD 858.1		

4. TITLE AND SUBTITLE	5. REPORT DATE
Investigation of Premature Strip Seal Joint Failures and Recommendations for Assuring Proper Strip Seal Joint Installation: Bridge 5/104W	August 2015
	6. PERFORMING ORGANIZATION CODE WA 0
7. AUTHOR(S) Craig Boone, P.E., S.E.	8. PERFORMING ORGANIZATION REPORT NO.
9. PERFORMING ORGANIZATION NAME AND ADDRESS Washington State Department of Transportation Bridge & Structures Office 7345 Linderson Way SW Tumwater, WA 98501	10. WORK UNIT NO. 11. CONTRACT OR GRANT NO.
12. SPONSORING AGENCY NAME AND ADDRESS Washington State Department of Transportation Bridge & Structures Office, MS 47340 Olympia, Washington 98504-7340 Project Manager:	13. TYPE OF REPORT AND PERIOD COVERED Final 14. SPONSORING AGENCY CODE

15. SUPPLEMENTARY NOTES

16. ABSTRACT

This document summarizes an investigation that was performed to identify the cause(s) of premature failures of strip seal expansion joints that were installed on WSDOT Bridge No. 5/104W. The document also includes recommendations for assuring proper installation of strip seal expansion joints. The investigation found that these strip seal joints failed in two ways, (1) the rubber gland fell out of the steel extrusions, and (2) the anchorage of the steel extrusions to the header concrete had failed. The investigation concluded that the rubber glands had fallen out of the steel extrusions because the glands were never completely seated in the steel extrusions during installation. The investigation identified three possible causes of the steel extrusion anchorage failures. Of the three possible causes, the investigation concludes the most likely cause of the steel extrusion anchorage failures was due to movement of the anchorages in the fresh header concrete before it gained strength. The movements were due to the steel extrusion on one side of the joint being constrained to the steel extrusion on the opposite side of the joint when the header concrete was placed. When the bridge expanded/contracted due to temperature changes, the extrusions in the fresh concrete moved, creating a "sloppy" connection between the anchorage steel and header concrete. The recommendations for assuring proper installation of strip seal expansion joints include educating bridge engineers and construction inspection staff, as well as making improvements to contract plans and provisions.

17. KEY WORDS	18. DISTRIBUTION STATEMENT
Bridges, Expansion Joints, Strip Seal Joints	No restrictions.

19. SECURITY CLASSIF. (of this report)	20. SECURITY CLASSIF. (of this page)	21. NO. OF PAGES	22. PRICE
None	None		

DISCLAIMER

The contents of this report reflect the views of the authors, who are responsible for the facts and the accuracy of the data presented herein. The contents do not necessarily reflect the official views or policies of the Washington State Department of Transportation. This report does not constitute a standard, specification, or regulation.

Special Project Investigation

Investigation of Premature Strip Seal Joint Failures and Recommendations for Assuring Proper Strip Seal Joint Installation

Bridge 5/104W

Washington State Department of Transportation

Engineering and Regional Operations
Development Division
Bridge & Structures Office

Table of Contents

Investigation of Premature Strip Seal Joint Failures At Bridge 5/104W And Recommendations For Assuring Proper Strip Seal Joint Installation

INTRODUCTION

Strip seal expansion joints generally perform well, providing dependable long term protection against water and debris intrusion while allowing a bridge to expand and contract. WSDOT has approximately 350 bridges that have strip seal expansion joints, equaling nearly 44,000 lineal feet of strip seal joint. Of these, 80% of the joints are in good condition (condition state 1). The average length of service is 20 years with some providing over 35 years of service. Because of their good performance, strip seals are WSDOT's preferred expansion joint system for moderate movement joints (1 ¾ inches to 5 inches).

On a few recent WSDOT projects there have been a number of strip seal joints that have failed prematurely. The purpose of this document is to present the findings of an investigation into the cause of one of the recent premature joint failures, as well as to provide recommendations for preventing premature failures in the future. Part A of this document focusses on an investigation of the strip seal joints that were installed on WSDOT Bridge 5/104W under Contract 8150. These strip seals began failing only months after being placed in service. Part B consists of recommendations for assuring that strip seal joints perform properly on future projects.

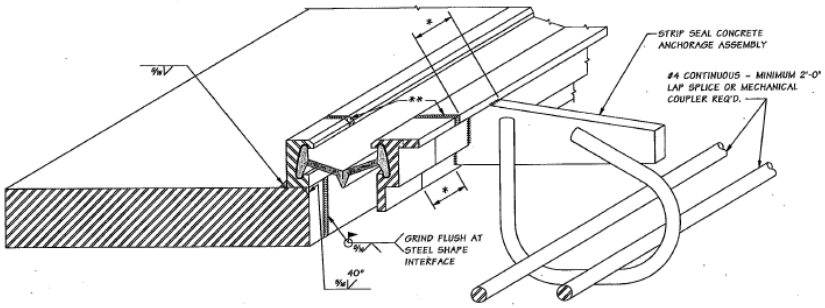

PART A – INVESTIGATION OF PREMATURE STRIP SEAL JOINT FAILURE AT BRIDGE 5/104W

JOINT HISTORY

Bridge 5/104W is a three span, 675-foot long, steel girder bridge that was constructed in 1972. The bridge was originally constructed with steel sliding plate expansion joint assemblies that were located at each abutment. The original expansion joints provided forty years of service until they were replaced with strip seal expansion joints in June 2012 under Contract 8150. After being in service for a matter of months, the new strip seal expansion joints at both the North and South abutments began to fail. In May 2014 the strip seal steel extrusions had become loose in the right lane and had to be removed by WSDOT Maintenance.

INVESTIGATION

In an effort to determine the cause of the premature failure of these joints, an investigation was performed. The investigation included the following:

Site Visit

On July 29, 2015 Craig Boone (WSDOT Bridge Asset Management Specialist) and Ralph Dornsife (WSDOT Bridge Expansion Joint Specialist) visited Bridge 5/104W and observed the following:

- At both the North and South expansion joints, the strip seal steel extrusions had been removed from the abutment side of the joint in the right lane and right shoulder (West side). The resulting void had been filled with concrete. (See Photos 1, 3, and 4 in Appendix H)
- The gland was completely out of the South joint and partially out of the remaining North joint. (See Photos 2, 5, and 6 in Appendix H)
- The South joint strip seal steel extrusion, on the abutment side, was loose and visibly vibrating when impacted by traffic in the fast lane (East side). (See Photo 4 in Appendix H)
- The North joint strip seal steel extrusion, on the abutment side, was audibly banging when impacted by traffic in the fast lane (East side).
- The bridge side of the joint, at both the North and South joints, were in good condition.
- Based on visual observation at a distance, the top of the strip seal steel extrusions seemed to be at the same elevation as the top of the adjacent header concrete. The bridge was open to traffic, so it was not possible to get out in the lanes to ascertain the condition with more certainty.
- The concrete that was placed when the strip seal steel extrusions were removed has broken up in the wheel lines of the North joint right lane, creating pot holes. (See Photo 3 in Appendix H)
- Small spalls and cracks have formed over the anchorage plates that were welded to the strip seal steel extrusions. This is typical at both the North and South joints. (See Photos 1 and 4 in Appendix H)
- Yellow paint, from lane striping, was observed on both upper ears of the South joint gland, which was lying down on the abutment. (See Photo 6 in Appendix H)
- Small pieces of concrete were adhered to the bottom side of the strip seal gland near the South joint West end. (See Photos 7 and 8 in Appendix H)
- On July 31, 2015 Craig Boone traveled across the bridge and noticed a bump at the North and South joints. It felt as though the joint headers were slightly higher than the adjacent bridge deck and approach surfaces.

Independent Design Calculations

Independent design calculations were prepared to check/validate the design presented on the contract plans. The joint requirements resulting from the independent design calculations matched exactly with the requirements presented on the Contract Plans. (See Appendix A)

Review of Contract Documents

The relevant portions of the contract plans and provisions for Contract 8150 were reviewed. (See Appendices B and C)

Review of Construction Submittals

The relevant construction submittals were reviewed. These submittals included the strip seal shop drawings and the manufacturer's installation procedure. (See Appendices D and E)

Review of Expansion Joint Photos

Available construction photos, joint repair photos, and site visit photos were reviewed. (See Appendices F, G, and H)

Inspector's Dailey Reports (IDR's)

The IDR's were reviewed. See Appendix I for a summary of the information taken from the IDR's.

Telephone Conversation With SW Region Maintenance

During a telephone conversation that took place on July 18, 2015, Mike London of Southwest Region Maintenance shared what he knew about the strip seal failures at Bridge 5/104W, as well as his experience/thoughts about strip seal expansion joints in general.

Strip Seal Failure At Bridge 5/104W

- Mike said the joint started failing about a month after the joint was installed.
- Mike said he thinks the steel extrusions may have been installed such that they were sticking up above the adjacent concrete, so tires began pounding on them right away.
- Mike said the anchorage plates (1/2" plates) remained intact, but the rebar hoops that attached to the plates broke just beyond where they attached to the plates.

Mike's Thoughts On Strip Seal Joints In General

- Mike feels strip seal joints don't work well on high volume roadways because once ruts form in the roadway surface, the tires begin banging on the steel extrusions and the joint breaks.
- Setting the top of the steel extrusion down below the top of the concrete would help.
- Mike said that once strip seal joints go downhill, there isn't much that can be done to repair them, short of a major rehabilitation/replacement.
- Mike said they typically don't attempt to reinstall glands that have fallen out of the steel extrusions.
- Mike said their typical repair for a steel extrusion that has come loose is to remove it and pour a concrete header.
- Mike feels compression seal joints are better because they don't have a steel element that gets banged on when ruts form in the roadway surface, and Maintenance can easily repair or replace compression seals.

Review of WSDOT Bridge Design Manual

The expansion joint section (Section 9.1) of the WSDOT Bridge Design Manual was reviewed. (See Appendix J)

Review of WSDOT Construction Manual

The WSDOT Construction Manual was reviewed. Construction of bridge expansion joints is not addressed in the current manual.

FAILURE MODES

Failure Mode 1 - Gland Fallen Out of Steel Extrusions

The first failure mode observed was the rubber gland had fallen out of the steel extrusions. At the South joint the gland was completely out of the joint and lying on the abutment. The gland at the North joint was still hanging in the steel extrusions in places and sagging down in others. There is significant evidence that suggests the gland fell out because it was never properly seated in the steel extrusions. The evidence is:

- During the site visit, yellow paint from lane striping was observed on the upper ears of the rubber gland. If the gland had been properly seated in the steel extrusion, the upper ears would have been shielded from paint by the steel extrusion. (See Photo 6 in Appendix H)
- Photos that were taken at the end of the joint installation show the upper ears sticking out. (See Photo 4 in Appendix F)
- An Inspector's Dailey Report from June 27, 2012 notes that the strip seal joints are not fully seated in the steel extrusions. The notes in the IDR indicate the noted deficiencies are to be included in the punch list. However, a hand written note dated July 9, 2012 states "WSDOT will address per conversation/direction with BSO".
- An Inspector's Dailey Report from December 12, 2012 indicates that there was a meeting at the bridge to determine if the rubber gland installations were acceptable. The decision was made that the installations were acceptable.

Failure Mode 2 – Steel Extrusions Loose / Failed Anchorage

The second failure mode consists of loose/sloppy connections between the steel extrusions and the supporting header concrete on the abutment side of the joint. The steel extrusions are intended to be solidly connected/supported by the header concrete. However, this connection has broken down, leaving the steel extrusions loose, vibrating, and banging. In May 2014 the extrusions had to be removed from the West shoulder and lane at both the North and South joints. The remaining sections of the steel extrusions were observed to be loose and banging during the site visit. These sections of steel extrusion will likely have to be removed in the near future.

The cause of this failure is difficult to determine with certainty. Three possible causes have been identified. Any one, or combination of these could have caused the degradation of the connections. The three possible causes, in no specific order, are:

Possible Cause No. 1 – It appears the temporary paint stripes used to shift traffic during construction were removed using a grinding machine. Photos show that the grinding machine possibly impacted the steel extrusions. It's possible the impact from the grinding machine could have damaged or broken the anchorages. It's also possible the impact could have damaged/cracked the recently placed concrete headers. (See Photos 5 in Appendix F)

Possible Cause No. 2 – If the top of the steel extrusions were set slightly higher than the adjacent header concrete, the steel extrusions would have immediately began taking a beating from the traffic. It's possible the impact from the traffic could have damaged or broken the anchorages. It's also possible the impact could have damaged/cracked the recently placed concrete headers. It should be noted the new joints were subjected to traffic within a couple of days of the header concrete being placed.

Possible Cause No. 3 – Based on review of construction photos, it appears the abutment side steel extrusion was attached to the bridge side extrusion when the abutment side header concrete was placed. The attachment consisted of the single angle shipping clamps that were used to set the expansion gap. As can be seen in the photos, the angles had a regular hole for attaching to one extrusion and a slotted hole for attaching to the other extrusion. The photos show that the bolt in the slotted hole was positioned all the way to one end of the slot (See Photo 3 in Appendix F). This means the angles would cause the steel extrusion to be pushed into the fresh concrete when the bridge expanded due to increased temperatures. The wood wedges that were installed between the two steel extrusions add to this effect. Based on the bridge length, the movement caused by a temperature change of 15-degrees would result in approximately 3/8-inch movement at the joints. If the abutment side steel extrusions and anchorages were pushed/moved 3/8-inch while the concrete was setting up, the resulting voids between the anchorage steel and concrete would result in a "sloppy" connection. The sloppy connection would not be apparent at the time because the voids would be inside the concrete around the steel anchorages. As soon as the joint was subjected to traffic impacts, the embedded steel elements would begin working and quickly degrade the connection between the steel extrusion and the header concrete.

It's not possible to know with absolute certainty what caused the steel extrusion to header concrete connection to degrade so quickly. Based on the information gathered, it seems most likely that "Possible Cause No. 3" caused the majority of the connection degradation. "Possible Cause No.'s 1 and 2 could have contributed to the degraded connection as well.

PART B – RECOMMENDATIONS FOR ASSURING PROPER STRIP SEAL JOINT INSTALLATION

EDUCATE BRIDGE ENGINEERS

Not being a primary structural element of a bridge, the expansion joints tend to receive little attention from bridge design engineers. That said, expansion joint repairs make up a large portion of WSDOT's bridge repair needs. Bridge engineers need to be educated on issues associated with expansion joint construction. It is recommended that Section 9.1 of the WSDOT Bridge Design Manual be expanded to address the following issues associated with expansion joint construction:

- For expansion joint types that have steel elements embedded in concrete, the steel elements need to be supported in a way that allows the elements on each side of the joint to move independent of one another. If the steel elements on the two sides of the joint are constrained to each other, the resulting movement can compromise the anchorage of the steel elements.
- For expansion joint types that have embedded steel elements, the tops of the steel elements need to be set level with, or slightly lower than the adjacent deck/approach driving surface. If the steel element sticks up above the adjacent driving surface, the steel element will take a pounding from vehicles and will degrade quickly. Setting the top of the steel element slightly below the adjacent driving surface may be beneficial, as pounding on the joint due to rutting of the driving surface would be delayed.

- Add a discussion regarding the selection of strip seal steel extrusion shapes and anchorages. Encourage the selection of larger extrusions and more robust anchorages.
- It may also be good to add a discussion regarding joint type selection, and encourage the selection of rapid cure silicone (RCS) and compression seal joints, over strip seal joints, when appropriate. RCS and compression seal joints are preferred by WSDOT Maintenance because they are easily repaired or replaced.

IMPROVE CONTRACT PLANS

WSDOT standard details and notes for strip seal expansion joints could be improved as follows:

- Develop a standard note that requires the steel extrusions temporary support to allow the steel extrusions to move independently of one another.
- A standard temporary support detail, that the Contractor is required to use, could be developed and included in the plans. The detail would address the issue of supporting the two sides of the joint independent of one another.
- Modify the current strip seal details to show the top of the steel extrusion placed slightly below the adjacent roadway surface. The top of the steel extrusion could be placed ¼" below the adjacent roadway surface.
- Develop standard details for using larger strip seal extrusion sections with a more robust anchorage.

IMPROVE CONTRACT PROVISIONS

WSDOT contract provisions for strip seal expansion joints could be improved by:

- Require the expansion joint shop drawing submittal to include details for the temporary support of the steel extrusions while concrete is placed.
- Require the contractor to submit an installation procedure for the strip seal expansion joints. Explicitly state that the procedure shall indicate how the extrusions from the two sided of the joint will be allowed to move independently of one another while concrete sets up and gains strength.
- Require that the rubber gland be installed by the Manufacturer at the factory, except as approved by the Engineer. When field installation of the gland is approved, require the Contractor to submit a gland installation procedure that illustrates the Contractors means and methods for installing the gland and assures the gland will be properly seated in the steel extrusions. Also, the provision should require that a manufacturer's representative be on site to oversee and certify the gland installation.

EDUCATE FIELD INSPECTION STAFF

The current WSDOT Construction Manual does not address bridge construction joints. Thus, WSDOT field inspection staff have no guidance on what to watch for when expansion joints are installed. It would be beneficial to add a section to the WSDOT Construction Manual that discusses the important aspects of bridge expansion joint installation.

Making the changes recommended above for the Contract Plans and Provisions will also help our field inspection staff. Addressing joint installation issues in the Contract Plans and Provisions will help field inspection staff identify

APPENDIX A

INDEPENDENT DESIGN CALCULATIONS

By: C. R. Boone

Bridge 5/104W Expansion Joint Design - Check

The bridge is not completely symetric... but is close. For this check I will assume the bridge is symetric. Also, the bridge has a slight curve to it but no skew at the abutments. Assume straight bridge with no skew.

$L := 675 \cdot ft$ Superstructure Length Between Expansion Joints

$C_{thermal} := 0.0000065 \cdot \frac{\left(\frac{in}{deg}\right)}{in}$ Coefficient of Thermal Expansion for Steel

$T_{install} := 64 \cdot deg$ Installation Temperature

$T_{max} := 120 \cdot deg$ Maximum Expected Temperature

$T_{min} := 0 \cdot deg$ Minimum Expected Temperature

$Range_{Temp} := T_{max} - T_{min}$

$Range_{Temp} = 120\ deg$ Expected In-Service Temperature Range

$\Delta_{temp} := \frac{L}{2} \cdot C_{thermal} \cdot Range_{Temp}$

$\Delta_{temp} = 3.159\ in$ Expected Movement Due to Temperature Variations

$\Delta_{shrink} := 0 \cdot in$ Expected Movement Due to Shrinkage (0-inches for existing steel bridge)

$\Delta_{Total} := \Delta_{temp} + \Delta_{shrink}$

$\Delta_{Total} = 3.159\ in$ Total Movement at Each Joint

$\Delta_{Closing} := \frac{(T_{max} - T_{install})}{(T_{max} - T_{min})} \cdot \Delta_{Total}$

$\Delta_{Closing} = 1.474\ in$ Closing Movement

$\Delta_{Opening} := \frac{(T_{install} - T_{min})}{(T_{max} - T_{min})} \cdot \Delta_{Total}$

$\Delta_{Opening} = 1.685\ in$ Opening Movement

Page 1 07/13/2015

By: C. R. Boone

Assume minimum construction gap width of 1.5-inches at 64 degrees

Type A Joint = 1/2" Gap at Full Closure.
Type B Joint = 0" Gap at Full Closure.

Joint Size at 64 Degree Construction

Type A Joint

$Gap_{ConstMinA} := 0.5 \cdot in + \Delta_{Closing}$

$Gap_{ConstMinA} = 1.974\ in$ > 1.5 in Minimum

$Gap_{ConstMinA} := 1.974 \cdot in$

$Size_{A64} := Gap_{ConstMinA} + \Delta_{Opening}$

$Size_{A64} = 3.659\ in$ Use 4" Type A Joint

Type B Joint

$Gap_{ConstMinB} := \Delta_{Closing}$

$Gap_{ConstMinB} = 1.474\ in$ < 1.5 in Minimum

$Gap_{ConstMinB} := 1.5 \cdot in$

$Size_{B64} := 1.5 \cdot in + \Delta_{Opening}$

$Size_{B64} = 3.185\ in$ Use 3.5" Type B Joint

Required Construction Gap At 40 deg., 64 deg., and 80 deg.

40 Degrees

$$Gap_{ConstA40} := Gap_{ConstMinA} + \frac{(T_{install} - 40 \cdot deg)}{(T_{install} - T_{min})} \cdot \Delta_{Opening}$$

$Gap_{ConstA40} = 2.606\ in$

$$Gap_{ConstB40} := Gap_{ConstMinB} + \frac{(T_{install} - 40 \cdot deg)}{(T_{install} - T_{min})} \cdot \Delta_{Opening}$$

$Gap_{ConstB40} = 2.132\ in$

By: C. R. Boone

64 Degrees

$Gap_{ConstMinA} = 1.974\ in$

$Gap_{ConstMinB} = 1.5\ in$

80 Degrees

$$Gap_{ConstA80} := Gap_{ConstMinA} - \frac{(80 \cdot deg - T_{install})}{(T_{max} - T_{install})} \cdot \Delta_{Closing}$$

$Gap_{ConstA80} = 1.553\ in$

$$Gap_{ConstB80} := Gap_{ConstMinB} - \frac{(80 \cdot deg - T_{install})}{(T_{max} - T_{install})} \cdot \Delta_{Closing}$$

$Gap_{ConstB80} = 1.079\ in$

APPENDIX B

CONTRACT PLANS (EXPANSION JOINT PORTION ONLY)

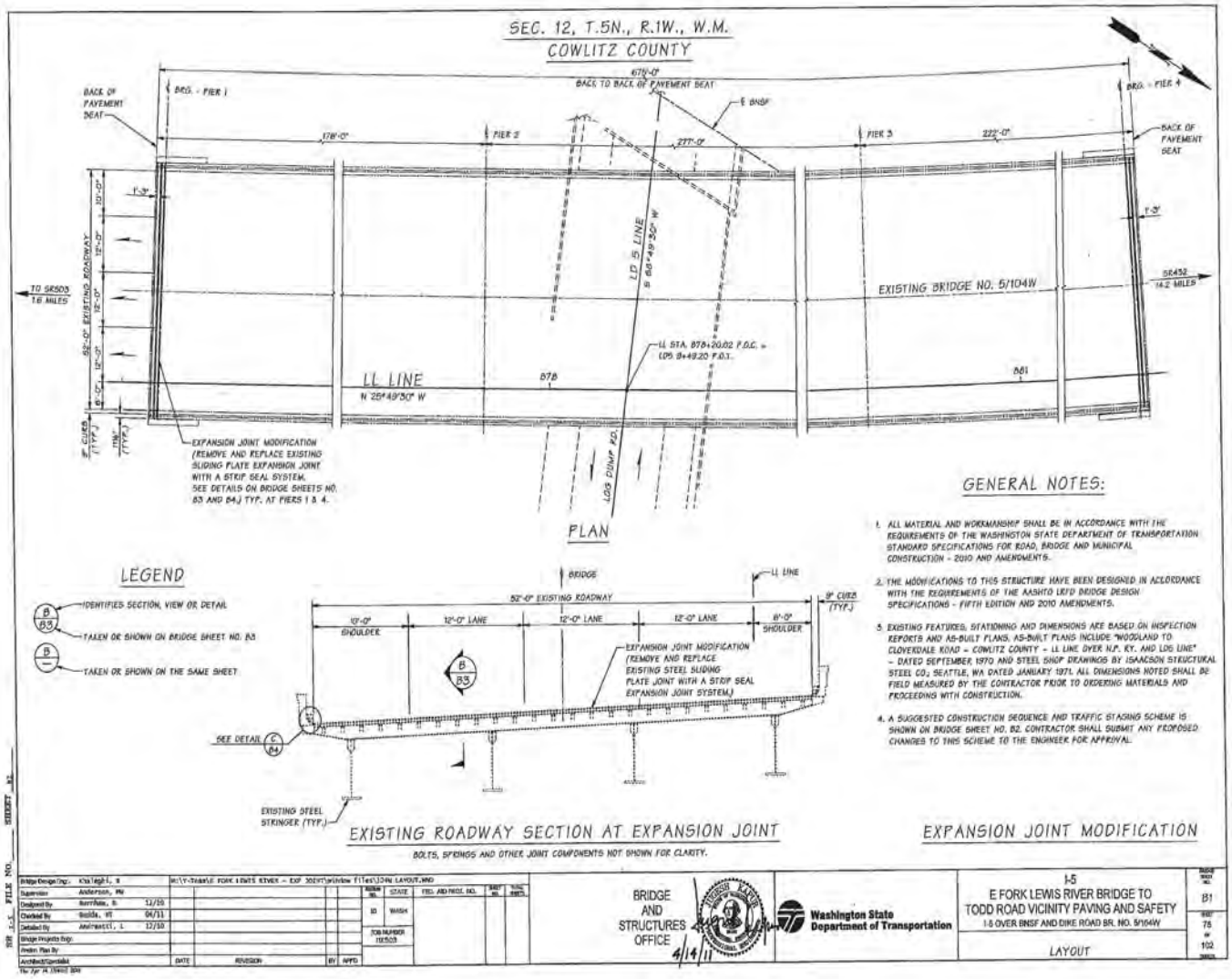

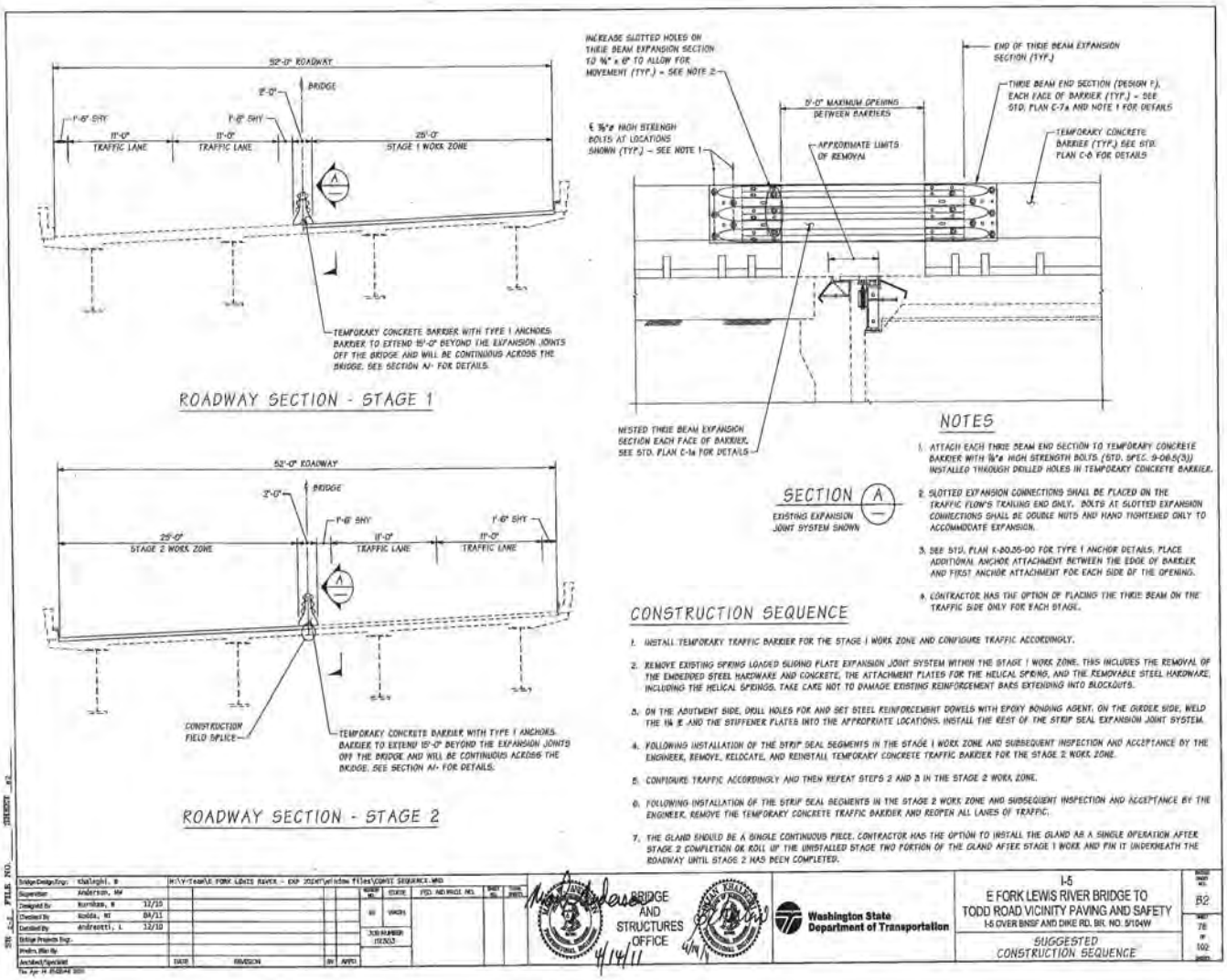
52'-0" ROADWAY
BRIDGE
2'-0"
1'-6" SHY
1'-6" SHY
11'-0" TRAFFIC LANE
11'-0" TRAFFIC LANE
25'-0" STAGE 1 WORK ZONE
TEMPORARY CONCRETE BARRIER WITH TYPE 1 ANCHORS. BARRIER TO EXTEND 15'-0" BEYOND THE EXPANSION JOINTS OFF THE BRIDGE AND WILL BE CONTINUOUS ACROSS THE BRIDGE. SEE SECTION A- FOR DETAILS.
ROADWAY SECTION - STAGE 1
52'-0" ROADWAY
BRIDGE
2'-0"
1'-6" SHY
1'-6" SHY
25'-0" STAGE 2 WORK ZONE
11'-0" TRAFFIC LANE
11'-0" TRAFFIC LANE
CONSTRUCTION FIELD SPLICE
TEMPORARY CONCRETE BARRIER WITH TYPE 1 ANCHORS. BARRIER TO EXTEND 15'-0" BEYOND THE EXPANSION JOINTS OFF THE BRIDGE AND WILL BE CONTINUOUS ACROSS THE BRIDGE. SEE SECTION A- FOR DETAILS.
ROADWAY SECTION - STAGE 2
INCREASE SLOTTED HOLES ON THRIE BEAM EXPANSION SECTION TO 3/4" x 6" TO ALLOW FOR MOVEMENT (TYP.) - SEE NOTE 2
END OF THRIE BEAM EXPANSION SECTION (TYP.)
THRIE BEAM END SECTION (DESIGN F). EACH FACE OF BARRIER (TYP.) - SEE STD. PLAN C-7a AND NOTE 1 FOR DETAILS
5'-0" MAXIMUM OPENING BETWEEN BARRIERS
℄ 3/4"ø HIGH STRENGTH BOLTS AT LOCATIONS SHOWN (TYP.) - SEE NOTE 1
APPROXIMATE LIMITS OF REMOVAL
TEMPORARY CONCRETE BARRIER (TYP.) SEE STD. PLAN C-6 FOR DETAILS
NESTED THRIE BEAM EXPANSION SECTION EACH FACE OF BARRIER. SEE STD. PLAN C-1a FOR DETAILS
SECTION A
EXISTING EXPANSION JOINT SYSTEM SHOWN
NOTES
1. ATTACH EACH THRIE BEAM END SECTION TO TEMPORARY CONCRETE BARRIER WITH 3/4"ø HIGH STRENGTH BOLTS (STD. SPEC. 9-06.5(3)) INSTALLED THROUGH DRILLED HOLES IN TEMPORARY CONCRETE BARRIER.
2. SLOTTED EXPANSION CONNECTIONS SHALL BE PLACED ON THE TRAFFIC FLOW'S TRAILING END ONLY. BOLTS AT SLOTTED EXPANSION CONNECTIONS SHALL BE DOUBLE NUTS AND HAND TIGHTENED ONLY TO ACCOMMODATE EXPANSION.
3. SEE STD. PLAN K-80.35-00 FOR TYPE 1 ANCHOR DETAILS. PLACE ADDITIONAL ANCHOR ATTACHMENT BETWEEN THE EDGE OF BARRIER AND FIRST ANCHOR ATTACHMENT FOR EACH SIDE OF THE OPENING.
4. CONTRACTOR HAS THE OPTION OF PLACING THE THRIE BEAM ON THE TRAFFIC SIDE ONLY FOR EACH STAGE.
CONSTRUCTION SEQUENCE
1. INSTALL TEMPORARY TRAFFIC BARRIER FOR THE STAGE 1 WORK ZONE AND CONFIGURE TRAFFIC ACCORDINGLY.
2. REMOVE EXISTING SPRING LOADED SLIDING PLATE EXPANSION JOINT SYSTEM WITHIN THE STAGE 1 WORK ZONE. THIS INCLUDES THE REMOVAL OF THE EMBEDDED STEEL HARDWARE AND CONCRETE, THE ATTACHMENT PLATES FOR THE HELICAL SPRINGS, AND THE REMOVABLE STEEL HARDWARE, INCLUDING THE HELICAL SPRINGS. TAKE CARE NOT TO DAMAGE EXISTING REINFORCEMENT BARS EXTENDING INTO BLOCKOUTS.
3. ON THE ABUTMENT SIDE, DRILL HOLES FOR AND SET STEEL REINFORCEMENT DOWELS WITH EPOXY BONDING AGENT. ON THE GIRDER SIDE, WELD THE 1/4 ℄ AND THE STIFFENER PLATES INTO THE APPROPRIATE LOCATIONS. INSTALL THE REST OF THE STRIP SEAL EXPANSION JOINT SYSTEM.
4. FOLLOWING INSTALLATION OF THE STRIP SEAL SEGMENTS IN THE STAGE 1 WORK ZONE AND SUBSEQUENT INSPECTION AND ACCEPTANCE BY THE ENGINEER, REMOVE, RELOCATE, AND REINSTALL TEMPORARY CONCRETE TRAFFIC BARRIER FOR THE STAGE 2 WORK ZONE.
5. CONFIGURE TRAFFIC ACCORDINGLY AND THEN REPEAT STEPS 2 AND 3 IN THE STAGE 2 WORK ZONE.
6. FOLLOWING INSTALLATION OF THE STRIP SEAL SEGMENTS IN THE STAGE 2 WORK ZONE AND SUBSEQUENT INSPECTION AND ACCEPTANCE BY THE ENGINEER, REMOVE THE TEMPORARY CONCRETE TRAFFIC BARRIER AND REOPEN ALL LANES OF TRAFFIC.
7. THE GLAND SHOULD BE A SINGLE CONTINUOUS PIECE. CONTRACTOR HAS THE OPTION TO INSTALL THE GLAND AS A SINGLE OPERATION AFTER STAGE 2 COMPLETION OR ROLL UP THE UNINSTALLED STAGE TWO PORTION OF THE GLAND AFTER STAGE 1 WORK AND PIN IT UNDERNEATH THE ROADWAY UNTIL STAGE 2 HAS BEEN COMPLETED.
BRIDGE AND STRUCTURES OFFICE
4/14/11
Washington State Department of Transportation
I-5
E FORK LEWIS RIVER BRIDGE TO TODD ROAD VICINITY PAVING AND SAFETY
I-5 OVER BNSF AND DIKE RD. BR. NO. 5/104W
SUGGESTED CONSTRUCTION SEQUENCE
B2

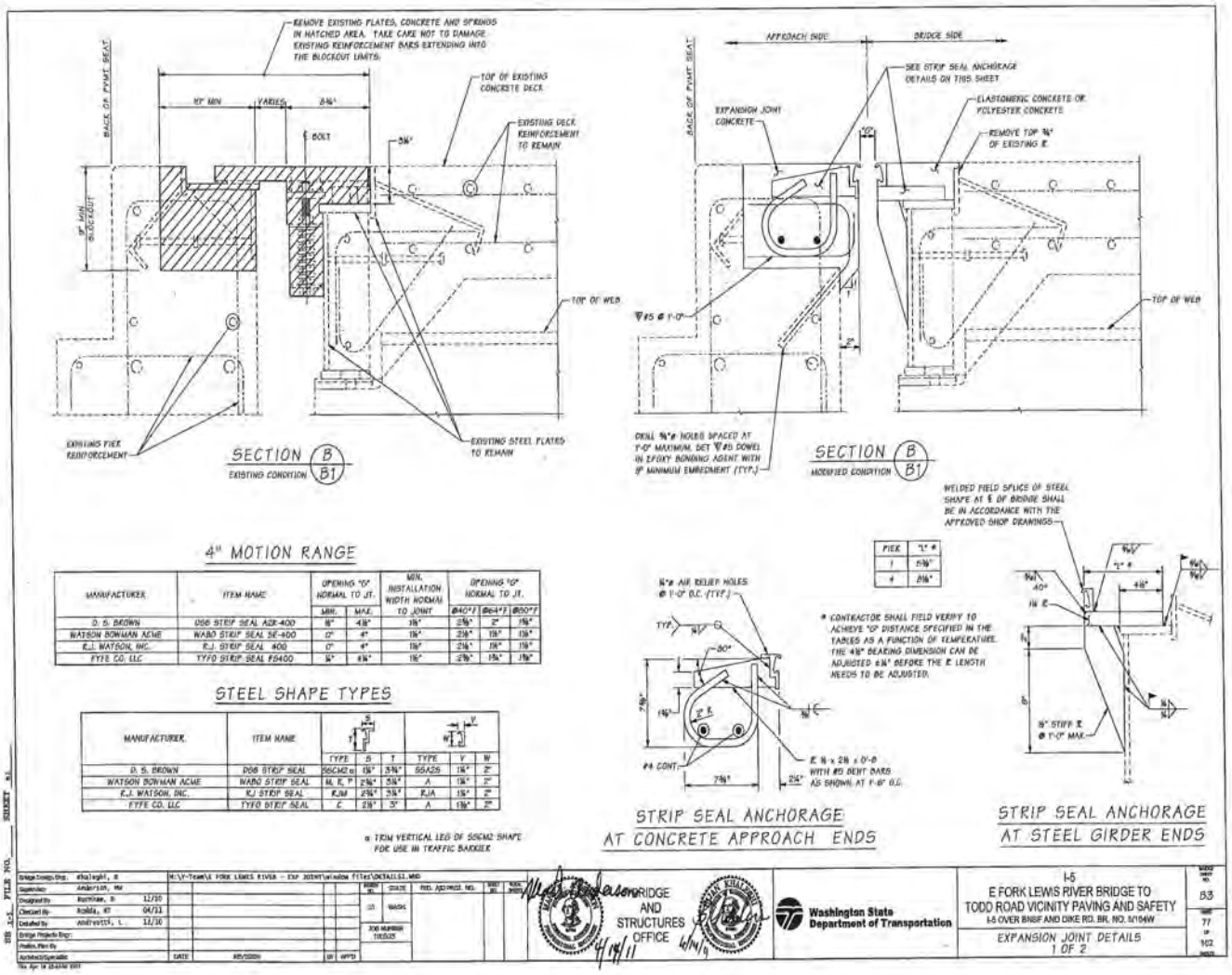
REMOVE EXISTING PLATES, CONCRETE AND SPRINGS IN HATCHED AREA. TAKE CARE NOT TO DAMAGE EXISTING REINFORCEMENT BARS EXTENDING INTO THE BLOCKOUT LIMITS.
BACK OF FINAL SEAT
10" MIN
VARIES
8¾"
℄ BOLT
5¾"
TOP OF EXISTING CONCRETE DECK
EXISTING DECK REINFORCEMENT TO REMAIN
9" MIN BLOCKOUT
TOP OF WEB
EXISTING FIER REINFORCEMENT
EXISTING STEEL PLATES TO REMAIN
SECTION B B1
EXISTING CONDITION
APPROACH SIDE
BRIDGE SIDE
SEE STRIP SEAL ANCHORAGE DETAILS ON THIS SHEET
EXPANSION JOINT CONCRETE
ELASTOMERIC CONCRETE OR POLYESTER CONCRETE
REMOVE TOP ¾" OF EXISTING ℄
#5 @ 1'-0"
DRILL ⅝"ø HOLES SPACED AT 1'-0" MAXIMUM, SET #5 DOWEL IN EPOXY BONDING AGENT WITH 9" MINIMUM EMBEDMENT (TYP.)
SECTION B B1
MODIFIED CONDITION
WELDED FIELD SPLICE OF STEEL SHAPE AT ℄ OF BRIDGE SHALL BE IN ACCORDANCE WITH THE APPROVED SHOP DRAWINGS
4" MOTION RANGE
STEEL SHAPE TYPES
FIER "L" *
1 5⅝"
4 8⅛"
* CONTRACTOR SHALL FIELD VERIFY TO ACHIEVE "O" DISTANCE SPECIFIED IN THE TABLES AS A FUNCTION OF TEMPERATURE. THE 4⅛" BEARING DIMENSION CAN BE ADJUSTED ±¾" BEFORE THE ℄ LENGTH NEEDS TO BE ADJUSTED.
⅜"ø AIR RELIEF HOLES @ 1'-0" O.C. (TYP.)
TYP.
30°
#4 CONT.
℄ ⅜ x 2½ x 0'-8 WITH #5 BENT BARS AS SHOWN AT 1'-6" O.C.
STRIP SEAL ANCHORAGE AT CONCRETE APPROACH ENDS
40°
⅜" STIFF ℄ @ 1'-0" MAX.
STRIP SEAL ANCHORAGE AT STEEL GIRDER ENDS
BRIDGE AND STRUCTURES OFFICE
Washington State Department of Transportation
I-5
E FORK LEWIS RIVER BRIDGE TO TODD ROAD VICINITY PAVING AND SAFETY
I-5 OVER BNSF AND DIKE RD. BR. NO. 5/104W
EXPANSION JOINT DETAILS 1 OF 2
B3
77 OF 102

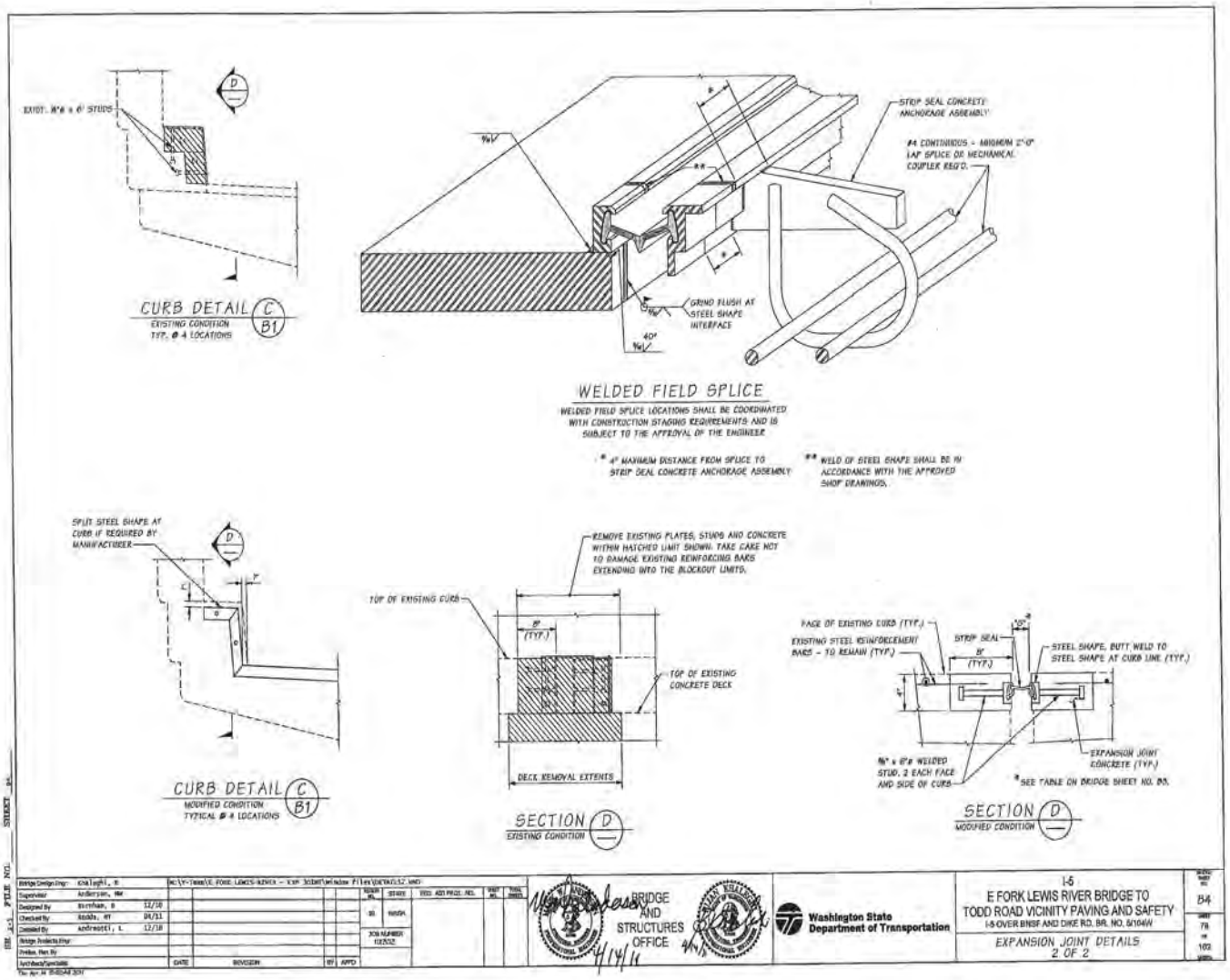
EXIST. 3/4" x 6" STUDS
CURB DETAIL C B1
EXISTING CONDITION
TYP. @ 4 LOCATIONS
STRIP SEAL CONCRETE ANCHORAGE ASSEMBLY
#4 CONTINUOUS - MINIMUM 2'-0" LAP SPLICE OR MECHANICAL COUPLER REQ'D.
GRIND FLUSH AT STEEL SHAPE INTERFACE
40°
WELDED FIELD SPLICE
WELDED FIELD SPLICE LOCATIONS SHALL BE COORDINATED WITH CONSTRUCTION STAGING REQUIREMENTS AND IS SUBJECT TO THE APPROVAL OF THE ENGINEER.
* 4" MAXIMUM DISTANCE FROM SPLICE TO STRIP SEAL CONCRETE ANCHORAGE ASSEMBLY
** WELD OF STEEL SHAPE SHALL BE IN ACCORDANCE WITH THE APPROVED SHOP DRAWINGS.
SPLIT STEEL SHAPE AT CURB IF REQUIRED BY MANUFACTURER
CURB DETAIL C B1
MODIFIED CONDITION
TYPICAL @ 4 LOCATIONS
REMOVE EXISTING PLATES, STUDS AND CONCRETE WITHIN HATCHED LIMIT SHOWN. TAKE CARE NOT TO DAMAGE EXISTING REINFORCING BARS EXTENDING INTO THE BLOCKOUT LIMITS.
TOP OF EXISTING CURB
TOP OF EXISTING CONCRETE DECK
DECK REMOVAL EXTENTS
SECTION D
EXISTING CONDITION
FACE OF EXISTING CURB (TYP.)
EXISTING STEEL REINFORCEMENT BARS - TO REMAIN (TYP.)
STRIP SEAL
STEEL SHAPE, BUTT WELD TO STEEL SHAPE AT CURB LINE (TYP.)
EXPANSION JOINT CONCRETE (TYP.)
3/4" x 6" WELDED STUD, 2 EACH FACE AND SIDE OF CURB
* SEE TABLE ON BRIDGE SHEET NO. B5.
SECTION D
MODIFIED CONDITION
BRIDGE AND STRUCTURES OFFICE
Washington State Department of Transportation
I-5
E FORK LEWIS RIVER BRIDGE TO TODD ROAD VICINITY PAVING AND SAFETY
I-5 OVER BNSF AND DIKE RD. BR. NO. 5/104W
EXPANSION JOINT DETAILS
2 OF 2
B4

APPENDIX C

CONTRACT PROVISIONS (EXPANSION JOINT PORTION ONLY)

- WSDOT Standard Specification for Road, Bridge, and Municipal Construction 2010 Section 6-02.3(13) Expansion Joints
- Special Provisions

6-02.3(13) Expansion Joints
This section outlines the requirements of specific expansion joints shown in the Plans. The Plans may require other types of joints, seals, or materials than those described here.

Joints made of a vulcanized, elastomeric compound (with neoprene as the only polymer) shall be installed with an approved lubricant adhesive as recommended by the manufacturer. The length of a seal shall match that required in the Plans without splicing or stretching.

Open joints shall be formed with a template made of wood, metal, or other suitable material. Insertion and removal of the template shall be done without chipping or breaking the edges or otherwise injuring the concrete.

Any part of an expansion joint running parallel to the direction of expansion shall provide a clearance of at least ½-inch (produced by inserting and removing a spacer strip) between the two surfaces. The Contractor shall ensure that the surfaces are precisely parallel to prevent any wedging from expansion and contraction.

All poured rubber joint sealer (and any required primer) shall conform with Section 9-04.2(2).

Contract Provisions

For Construction of:

I-5	18.37 TO 26.47
SR 503	54.24 TO 54.38

E FORK LEWIS RIVER BRIDGE TO TODD ROAD VICINITY - PAVING AND SAFETY

All Addenda Incorporated

CLARK AND COWLITZ COUNTIES

F. A. PROJECT NO. IM-0051(285)

Washington State Department of Transportation

CONCRETE STRUCTURES

Materials

Section 6-02.2 is supplemented with the following:

(December 2, 2002)
Epoxy Bonding Agent For Surfaces And For Steel Reinforcing Bar Dowels
Epoxy bonding agent for surfaces shall be Type II, as specified in Section 9-26.1. Epoxy bonding agent for steel reinforcing bar dowels shall be either Type I or Type IV, as specified in Section 9-26.1. The grade and class of epoxy bonding agent shall be as recommended by the resin manufacturer and approved by the Engineer.

(August 3, 2009)
Strip Seal Expansion Joint System
The metal components shall conform to ASTM A 36, ASTM A 992, or ASTM A 572, and shall be protected against corrosion by one of the following methods:

1. Zinc metallized in accordance with Section 6-07.3 as supplemented in these Special Provisions.

2. Hot-dip galvanized in accordance with AASHTO M 111.

3. Paint in accordance with Section 6-07.3(9). The color of the top coat shall be Washington Gray. The surfaces embedded in concrete shall be painted only with a shop primer coat of paint conforming to Section 9-08.1(2)C.

The strip seal gland shall be continuous for the full length of the joint with no splices permitted, unless otherwise shown in the Plans.

(BSP January 4, 2010)
Polyester Concrete
Polyester Resin Binder
The resin shall be an unsaturated isophthalic polyester-styrene co-polymer.

Prior to adding the initiator, the resin shall conform to the following requirements:

Viscosity:	75 to 200 cps (20 rpm at 77F, RVT No. 1 spindle)	ASTM D 2196
Specific Gravity:	1.05 to 1.10 at 77F	ASTM D 1475
Styrene Content:	45% to 50% by weight of polyester styrene resin	ASTM D2369

After adding the initiator, the resin shall conform to the following requirements:

Elongation:	35% minimum w/ thickness 0.25" ± 0.04"	ASTM D 638
Tensile Strength:	2,500 psi minimum	ASTM D 638

Under no circumstances shall any elastomeric concrete mixture run into drains or expansion joints, or otherwise escape the Contractor's collection and containment system.

Finished Elastomeric Concrete Surface
The finished surface of the elastomeric concrete shall conform to the requirements of Section 6-02.3(10).

Finishing tools or equipment used shall strike off the elastomeric concrete to the established grade and cross section. Forms shall be coated with suitable bond release agent to permit ready release of forms.

The finished surface of elastomeric concrete shall receive an abrasive sand finish. The sand finish shall be applied by hand immediately after strike-off and before gelling occurs. Sand shall be broadcast onto the surface to affect a uniform coverage of a minimum of 0.8 pounds per square yard.

The surface texture of elastomeric concrete surface shall be uniform. The elastomeric concrete shall be impervious to moisture.

Curing
Traffic and equipment shall not be permitted on the elastomeric concrete until it has achieved a minimum compressive strength of 2,500 psi as determined by the rebound number per ASTM C 805.

Areas of the elastomeric concrete that do not totally cure or that fail to attain the specified minimum compressive strength in six hours shall be removed and replaced by the Contractor at no additional expense to the Contracting Agency.

Proportioning Materials

Section 6-02.3(2) is supplemented with the following:

(BSP January 4, 2010)
Expansion Joint Header Concrete
Expansion joint header concrete shall have a minimum compressive strength of 2,500 psi at 12 hours, and 4,000 psi at 28 days, except that, when staging and traffic control requirements for the project allow, the 12 hour time period may be waived provided that the concrete reaches a minimum compressive strength of 2,500 psi prior to the Contractor allowing traffic to pass across the expansion joint.

The maximum water-cement ratio shall be 0.40. The minimum fly ash content shall be ten percent of the total cementitious materials.

Type III cement conforming to Section 9-01.2(1) may be used.

The nominal maximum size aggregate for expansion joint header concrete shall be 3/4 inch.

Section 6-02.3(3) notwithstanding, non-chloride accelerating admixtures conforming to Section 9-23.6 and the following specifications may be used:

Admixture	Specifications	
Accelerating	AASHTO M 194 Type C	ASTM C 494 Type C
Water Reducing/ Accelerating	AASHTO M 194 Type E	ASTM C 494 Type E

Bridge Decks and Bridge Approach Slabs

Concrete Placement, Finishing, and Texturing

Section 6-02.3(10)D is supplemented with the following:

(January 4, 2010)
Plugging Existing Bridge Drain
The Contractor shall submit the method and materials used to plug the existing bridge drains specified in the Plans to be plugged, to the Engineer for approval. The submittal shall include the following:

1. Material used to plug the drain outlet, and method of securing the plug in position.

2. The type of concrete material used to fill the drain cavity.

3. The method used to remove the exposed drainpipe, if removal is specified in the Plans.

All cut, damaged, and exposed metal surfaces to remain, including the drain outlet plug if metal components are used, shall be painted with two coats of paint conforming to Section 9-08.1(2)F. Each coat shall have a minimum dry film thickness of two mils.

When the removal of exposed drainpipe is specified in the Plans, the Contractor shall remove the embedded anchors a minimum of one inch beneath the existing concrete surface. The void left by removal of the embedded anchors shall be coated with epoxy bonding agent and filled with mortar conforming to Section 9-20.4(2). The epoxy bonding agent shall be Type II conforming to Section 9-26.1 with the grade and class as recommended by the epoxy bonding agent manufacturer and as approved by the Engineer. The mortar shall consist of cement and fine aggregate mixed in the proportions to match the color of the existing concrete surface as near as practicable.

All materials removed from the bridge drains specified in the Plans to be plugged shall be disposed of as specified in Section 2-02.3.

(August 4, 2008)
Bridge Deck Repair
The Contractor shall have the services of a qualified technical representative of the pre-packaged bridge deck repair mix manufacturer available at the job site to assist in assuring the proper preparation and use of the pre-packaged bridge deck repair mix in the bridge deck repair. The qualified technical representative shall be present at the site at all times while the Contractor is

preparing and placing the pre-packaged bridge deck repair mix. The qualified technical representative shall be an employee of the pre-packaged bridge deck repair mix manufacturer. Recommendations made by the qualified technical representative and approved by the Engineer, shall be followed by the Contractor.

All loose and unsound concrete within the repair area shall be removed with jackhammers or chipping hammers no more forceful than the nominal 30 pounds class, or other mechanical means approved by the Engineer, and operated at angles less than 45 degrees as measured from the surface of the deck to the tool. If unsound concrete exists around the existing steel reinforcing bars, or if the bond between concrete and steel reinforcing bar is broken, the Contractor shall remove the concrete to provide a 3/4 inch minimum clearance to the bar. The Contractor shall take care to prevent damage to the existing steel reinforcing bars and concrete to remain.

After removing sufficient concrete to establish the limits of the repair area, the Contractor shall make neat vertical saw cuts and maintain square edges at the boundaries of the repair area. The saw cut depth shall not exceed 3/4 inch or the concrete cover over the top steel reinforcing bars, whichever is less.

The pre-packaged bridge deck repair mix shall be thoroughly mixed in a batch mixer which mixes materials uniformly throughout the batch, and is of the type and size approved by the Engineer. The mixer shall have a minimum rated capacity of four cubic feet. The batches shall be charged into the mixer such that some water enters before the pre-packaged material. The Contractor shall place all water required for the mix in the drum by the end of the first quarter of the required mixing time of one minute minimum. The volume of water used, including the moisture content of the aggregate extenders, shall not exceed the volume recommended by the pre-packaged bridge deck repair mix manufacturer by more than one percent. If the Contractor uses water in excess of the specified maximum limit, or uses wet aggregate, the mix will be subject to rejection by the Engineer.

The Contractor may propose shorter mixing times with special mixing equipment by submitting mixing test results to the Engineer for approval. If the Contractor uses heated water, the Engineer may require revising the order of charging to prevent flash setting of the mix.

If the pre-packaged bridge deck repair mix does not include aggregate, the Contractor shall extend the mix with aggregate conforming to Section 9-20.2(3). The amount of aggregate used to extend the mix shall be between 50 percent and 100 percent of the maximum volume, by weight, recommended by the pre-packaged bridge deck repair mix manufacturer.

The exposed steel reinforcing bars and concrete in the repair area shall be sandblasted and blown clean just prior to placing the bridge deck repair material.

All bridge deck repair areas shall be cured in accordance with the pre-packaged bridge deck repair mix manufacturer's recommendations as approved by the Engineer, or in accordance with Section 6-02.3(11) for Class

4000D concrete, until the bridge deck repair material has attained the specified strength. During curing, all vehicular and foot traffic shall be prohibited on the repaired area.

For those bridge decks receiving a waterproofing membrane and HMA overlay, all deck repair shall be completed prior to placement of the waterproofing membrane.

Expansion Joints

Section 6-02.3(13) is supplemented with the following:

(June 26, 2000)
Strip Seal Expansion Joint System
The Contractor shall submit working drawings of the expansion joint system to the Engineer for approval in accordance with Section 6-03.3(7). These plans shall include but not be limited to the following:

1. Plan, elevation, and sections of the joint system and all components, with dimensions and tolerances.

2. All material designations.

3. Manufacturer's written installation procedure.

4. Corrosion protection system used on the metal components.

5. Locations of welded shear studs, lifting mechanisms, temperature setting devices, and construction adjustment devices.

6. Method of sealing the system to prevent leakage of water through the joint.

The strip seal shall be removable and replaceable.

Other than items shown in the Plans, threaded studs used for construction adjustments are the only items that may be welded to the steel shapes provided they are removed by grinding after use, and the area repaired by application of an approved corrosion protection system.

If the opening between the steel shapes is anticipated to be less than 1-1/2 inches at the time of seal installation, the seal may be installed prior to encasement of the steel shapes in concrete.

After the joint system is installed, the joint shall be flooded with water and inspected, from below the joint, for leakage. If leakage is observed, the joint system shall be repaired by the Contractor, as recommended by the manufacturer and approved by the Engineer, at no additional cost to the Contracting Agency.

Expansion Joint Modification

(BSP June 26, 2000)
Plans of Existing Bridge Expansion Joint
Plans of the existing bridge(s), including expansion joint details, are available at the Project Engineer's Office for the prospective bidder's inspection.

(BSP June 26, 2000)
Expansion Joint Demolition Plan
The Contractor shall submit a demolition plan with working drawings to the Engineer for approval in accordance with Section 6-01.9 showing the method of removing the specified portions of the existing bridge expansion joints. The demolition plan shall show the sequence of demolition and removal, the type of equipment to be used in all demolition and removal operations, and details of the methods and equipment used for containment, collection, and disposal of all debris. The plan shall show all stages of demolition. The Contractor shall not begin removal operations until receiving the Engineer's approval of the demolition plan.

(BSP June 26, 2000)
Field Measuring Existing Bridge Expansion Joints
The Contractor shall field measure the following dimensions of the existing bridge expansion joints of Bridge No(s). *** 5/102E&W and 5/104W ***:

1. Length along the roadway surface and the horizontal and vertical surfaces of the concrete curb.

2. Opening width at both curb lines and at the centerline of the roadway surface.

The Contractor shall tabulate these field measured dimensions and submit them to the Engineer along with the rapid cure silicone sealant joint preparation and installation procedure, or the strip seal expansion joint assembly shop drawings, as applicable for the specific bridge expansion joint.

(BSP January 29, 2007)
Removing Portions of Existing Bridge Expansion Joints
The Contractor shall remove all concrete, expansion joint materials, overlay, dirt and debris at the bridge expansion joints of Bridge No(s). *** 5/104W *** within the blockout dimensions shown in the Plans.

Before removing the portions of the existing concrete adjacent to that which is to remain, a 3/4-inch deep saw cut, but no deeper than the existing concrete cover over the steel reinforcing bars, shall be made into the surface of the concrete to form a break line. Care shall be taken to prevent cutting the existing reinforcing steel bars which are to remain.

The Contractor shall remove concrete in the vicinity of the bridge expansion joints using the following power driven tools:

1. Jack hammers no heavier than the nominal 30 pound class.

2. Chipping hammers no heavier than the nominal 15 pound class.

No other power driven equipment shall be used to remove concrete in the vicinity of the bridge expansion joints. The power driven tools shall be operated at angles less than 45 degrees as measured from the surface of the deck to the tool.

Care shall be taken in removing concrete to prevent overbreakage or damage to portions of the existing structure which are to remain. Concrete shall be carefully broken away from the steel reinforcing bars which extend from the existing structure. Steel reinforcing bars which extend from the existing members shall be cleaned (defined as exposing the deformed surface of the bar) and spliced with the steel reinforcing bars in the new members unless shown otherwise in the Plans. The Contractor shall protect traffic from falling concrete and debris, in accordance with the debris collection and containment provisions of the demolition plan as approved by the Engineer. The Contractor shall dispose of all materials removed from the bridge expansion joints in accordance with Section 2-02.3.

The Contractor shall roughen the existing concrete surfaces bonding to the header material. For polymer concrete headers, polyester concrete headers, or elastomeric concrete headers, the Contractor shall clean and prepare all existing concrete surfaces bonding to the header in accordance with the ***Polymer Concrete*** or ***Polyester Concrete*** or ***Elastomeric Concrete*** subsection, respectively, to Section 6-02.3 as supplemented in these Special Provisions. For concrete headers, the Contractor shall clean and prepare all existing concrete surfaces bonding to the header in accordance with Section 6-02.3(12).

(******)
The Contractor shall remove all expansion joint materials, and associated overlay, dirt and debris at the bridge expansion joints of Bridge Nos. 5/102E&W Piers 1, 2, 3 and 4. This includes removal of the existing modular bolt-down expansion joint panels and associated anchors.

In addition to the requirements specified above for Bridge No. 5/104W, the expansion joint modification of Bridge Nos. 5/102E&W shall also include the following:

> The anchors of the existing modular bolt-down expansion joint panels shall be removed one-inch minimum beneath the surface of the surrounding concrete. The annulus left by anchor removal shall be coated with Type II epoxy bonding agent conforming to Section 9-26.1, with the grade and class as recommended by the epoxy bonding agent manufacturer and as approved by the Engineer, and shall be filled with mortar conforming to Section 9-20.4(2).

(BSP June 26, 2000)
Drilling Holes and Setting Steel Reinforcing Bars
The Contractor shall drill holes for, and set, steel reinforcing bars into the existing concrete as shown in the Plans in accordance with Section 6-02.3(24)C as supplemented in these Special Provisions.

(BSP January 29, 2007)
Placing Polyester Concrete or Elastomeric Concrete Headers
The Contractor shall form the polyester concrete or the elastomeric concrete headers in accordance with either the ***Polyester Concrete*** or the ***Elastomeric Concrete*** subsection to Section 6-02.3 as supplemented in these Special Provisions. The Contractor shall remove all forms from the bridge expansion joints after casting and curing the polyester concrete or the elastomeric concrete headers.

(BSP January 4, 2010)
Placing Concrete Headers
The Contractor shall form, cast, and cure, the concrete headers in accordance with Section 6-02.3 and as shown in the Plans. The Contractor shall remove all forms from the bridge expansion joints after casting and curing the concrete headers. The concrete headers shall have attained a minimum compressive strength of 2,500 psi before the Contractor may allow traffic to pass across the expansion joint.

Measurement

Section 6-02.4 is supplemented with the following:

(BSP June 26, 2000)
Expansion joint modification contains the following approximate quantities of materials and work:

*** Bridge No. 5/102E

Removing Exist. Modular Bolt-Down Expansion Joint Panel	190	L.F.
RCS Joint Sealant	190	L.F.

Bridge No. 5/102W

Removing Exist. Modular Bolt-Down Expansion Joint Panel	190	L.F.
RCS Joint Sealant	190	L.F.

Bridge No. 5/104W

Removing Exist. Steel Exp. Joint Assembly & Conc. Header	110	L.F.
Drill Hole For Steel Reinf. Bar Dowel	69	L.F.
St. Reinf. Bar	610	LB.
Expansion Joint Header Concrete	70	C.F.
Elastomeric or Polyester Concrete	13	C.F.
Strip Seal Expansion Joint Assembly	110	L.F. ***

The quantities are listed only for the convenience of the Contractor in determining the volume of work involved and are not guaranteed to be accurate. The prospective bidders shall verify these quantities before submitting a bid. No adjustments other than for approved changes will be made in the lump sum contract price for "Expansion Joint Modification" even though the actual quantities required may deviate from those listed.

(BSP January 12, 2009)

Bridge deck repair will be measured by the square foot of surface area of deck concrete removed, with the measurement taken at the plane of the top mat of steel reinforcing bars.

Payment

The fifth and sixth bid items under Section 6-02.5 are supplemented with the following:

(June 26, 2000)
All costs in connection with drilling holes in concrete and setting steel reinforcing bar dowels with epoxy resin as specified shall be included in the unit contract price per pound for "St. Reinf. Bar _____" or "Epoxy-Coated St. Reinf. Bar _____" as applicable. If the steel reinforcing bars are to be paid for other than by type of bar then the costs shall be included in the applicable adjacent item of work.

Section 6-02.5 is supplemented with the following:

(BSP June 26, 2000)
"Expansion Joint Modification ___", lump sum.

(June 26, 2000)
"Plugging Existing Bridge Drain", per each.

(BSP January 12, 2009)
"Bridge Deck Repair", per square foot.
The unit contract price per square foot for "Bridge Deck Repair" shall be full pay for performing the work as specified, including removing and disposing of the concrete within the repair area and furnishing, placing, finishing, and curing the repair concrete.

(June 26, 2000)
Bridge and Structures Minor Items
For the purpose of payment, such bridge and structures items as *** epoxy bonding agent *** etc., for which there is no pay item included in the proposal, are considered as bridge and structures minor items. All costs in connection with furnishing and installing these bridge and structures minor items as shown and noted in the Plans and as outlined in these specifications and in the Standard Specifications shall be included in the *** applicable adjacent item of work ***

PAINTING

Construction Requirements

Section 6-07.3 is supplemented with the following:

(August 2, 2010)
Metallic Coatings
General Requirements
This specification covers the requirements for thermal spray metallic coatings, with and without additional paint coats, as a means to prevent corrosion.

The coating system consists of surface preparation by wash cleaning and abrasive blast cleaning, thermal spray application of a metallic coating using a material

APPENDIX D

STRIP SEAL SHOP DRAWING

GENERAL NOTES

1.0 GENERAL

1.1 THE CONTRACTOR MUST VERIFY ALL DIMENSIONS PRIOR TO FABRICATION TO ENSURE ACCURACY OF THE EXPANSION JOINT.

1.2 ALL WORK SHALL COMPLY WITH THE WASHINGTON STATE DEPARTMENT OF TRANSPORTATION STANDARD SPECIFICATIONS FOR ROAD, BRIDGE AND MUNICIPAL CONSTRUCTION, 2010 EDITION.

1.3 EXPANSION JOINT SHALL COMPLY WITH SECTION 6-02.3(13) "EXPANSION JOINTS" OF THE STANDARD SPECIFICATIONS, MODIFIED BY SECTION 6-02.3(13) "EXPANSION JOINTS" OF THE SPECIAL PROVISIONS.

1.4 ANY INCONSISTENCY IN THE PARTS OF THE CONTRACT SHALL BE RESOLVED BY THE FOLLOWING ORDER OF PRECEDENCE:

1. ADDENDA
2. PROPOSAL FORM
3. SPECIAL PROVISIONS, INCLUDING APWA GENERAL SPECIAL PROVISIONS, IF THEY ARE INCLUDED
4. CONTRACT PLANS
5. AMENDMENTS TO STANDARD SPECIFICATIONS
6. WSDOT/APWA STANDARD SPECIFICATIONS FOR ROAD, BRIDGE AND MUNICIPAL CONSTRUCTION
7. CONTRACTING AGENCY'S STANDARD PLANS (IF ANY)
8. WSDOT/APWA STANDARD PLANS FOR ROAD, BRIDGE AND MUNICIPAL CONSTRUCTION

PER SECTION 1-04.2 "COORDINATION OF CONTRACT DOCUMENTS, PLANS, SPECIAL PROVISIONS SPECIFICATIONS AND ADDENDA".

2.0 STANDARD SPECIFICATION CRITERIA

3.0 SPECIAL PROVISION CRITERIA

4.0 MATERIALS

4.1 ALL STRUCTURAL AND PERMANENT MATERIALS SHALL BE OF DOMESTIC ORIGIN, AND MATERIAL CERTIFICATION STATING ALL SUCH MATERIALS ARE "MELTED AND MANUFACTURED" IN THE UNITED STATES OF AMERICA SHALL BE SUBMITTED.

4.2 ALL STEEL EXTRUSIONS SHALL BE IN ACCORDANCE WITH ASTM A 36.

4.3 THE STRIP SEAL GLAND SHALL BE POLYCHLOROPRENE (NEOPRENE) IN ACCORDANCE WITH THE FOLLOWING REQUIREMENTS:

REQUIRED PHYSICAL PROPERTIES	ASTM PROCEDURE	PHYSICAL REQUIREMENTS
TENSILE STRENGTH, MIN. psi (MPa)	D-412	2000 (13.8)
ELONGATION @ BREAK, MIN.	D-412	250 %
HARDNESS, TYPE A DUROMETER	D-2240	65 ± 5
OVEN AGING 70 hrs. @ 212°F TENSILE STRENGTH, LOSS, MAX. ELONGATION, LOSS, MAX.	D-573	 20% 20%
HARDNESS, TYPE A DURO (POINTS CHANGE)		0 TO 10
OIL SWELL, ASTM #3 OIL, 70 hrs. @ 212°F WEIGHT CHANGE, MAX.	D-471	45%
OZONE RESISTANCE, 20% STRAIN 300 pphm IN AIR 70 hrs. @ 104°F (40°C) WITH TOLUENE TO REMOVE SURFACE CONTAMINANTS	D-1149	NO CRACKS
LOW TEMPERATURE STIFFENING 7 DAYS @ 14°F HARDNESS TYPE A DURO, POINTS CHANGE	D-2240	0 TO +15

4.4 THE STRIP SEAL GLAND SHALL BE ADHERED IN PLACE USING PRIMA-LUB ADHESIVE AND LUBRICANT. PRIMA-LUB IS A ONE-COMPONENT BLEND OF URETHANE AND AROMATIC SOLVENTS FOR USE IN LUBRICATING PREFORMED BRIDGE SEALS FOR INSTALLATION AND ADHESION TO METAL AND CONCRETE SURFACES. PRIMA-LUB SHALL BE IN ACCORDANCE WITH THE FOLLOWING REQUIREMENTS:

REQUIRED PHYSICAL PROPERTIES

RESIN TYPE:	MOISTURE CURE URETHANE
SOLVENT:	AROMATIC NAPHTHA
WEIGHT SOLIDS:	72 – 77%
VOLUME SOLIDS:	55 – 60%
WEIGHT/GALLON:	8.4 – 8.6 lbs/gal
PRACTICAL COVERAGE:	400 – 500 ft.²/GALLON – SMALL SEALS (STRIP SEALS) 100 – 200 ft.²/GALLON – LARGE SEALS (COMPRESSION SEALS)
FLASHPOINT:	100°F (40.5°C)
SHELF LIFE:	ONE YEAR FROM DATE OF MANUFACTURE
MEETS OR EXCEEDS ASTM D-4078	
FILM STRENGTH ASTM D-412	2000 psi (MIN.)
% ELONGATION (BEFORE BREAK)	350 (MIN.)
WORKABLE TEMPERATURE RANGE	5 – 120°F (-15 – 49°C)

4.5 SHOAR STUDS SHALL BE IN ACCORDANCE WITH ASTM A 108 (AISI/SAE 1018 TO 1020).

5.0 INSPECTION REQUIREMENTS

5.1 IN HOUSE SHOP INSPECTION BY A REPRESENTATIVE OF THE CITY OF REDMOND DEPARTMENT OF TRANSPORTATION INDEPENDENT OF WATSON BOWMAN ACME CORP.'S QUALITY CONTROL INSPECTOR IS NOT REQUIRED.

5.2 QUALITY CONTROL INSPECTION

5.2.1 DURING FABRICATION OF THE EXPANSION JOINT, WATSON BOWMAN ACME SHALL PROVIDE FULL TIME QUALITY CONTROL INSPECTION TO ENSURE THAT THE MATERIALS AND WORKMANSHIP MEET OR EXCEED THE MINIMUM REQUIREMENTS OF THE CONTRACT.

5.2.2 QUALITY CONTROL INSPECTION SHALL BE THE RESPONSIBILITY OF A QUALITY CONTROL GROUP, WHICH SHALL BE INDEPENDENT OF THE FABRICATION GROUP.

WSDOT Fabrication inspection?

6.0 FABRICATION

6.1 FABRICATION SHALL BE IN ACCORDANCE WITH WATSON BOWMAN ACME'S QUALITY CONTROL MANUAL AND MANUFACTURING TOLERANCES.

6.2 THE EXPANSION JOINT OPENING SHALL BE PRESET BY WATSON BOWMAN ACME TO A JOINT OPENING OF 2". FINAL ADJUSTMENTS SHALL BE MADE IN THE FIELD BY THE CONTRACTOR AT THE DIRECTION OF THE ENGINEER IN CHARGE, PRIOR TO FINAL CONCRETE PLACEMENT.

6.3 EXPANSION JOINT ASSEMBLIES SHALL BE WELDED IN ACCORDANCE WITH AWS/AWS/AASHTO BRIDGE WELDING CODE 01.1 PER SECTION 6-03.3(26) OF THE STANDARD SPECIFICATIONS.

6.4 WATSON BOWMAN ACME SHALL PREPARE THE ENDS OF THE STEEL SHAPES FOR FIELD WELDING.

6.5 STUDS MAY BE BENT TO AN ANGLE OF 30° TO AVOID INTERFERENCE WITH DECK REINFORCEMENT, OR TO PROVIDE PROPER CONCRETE COVER.

6.6 ALL WELDING SHALL BE EXECUTED USING EITHER GMAW OR FCAW PROCESSES UNLESS A PROCESS IS SPECIFICALLY IDENTIFIED ON THE SHOP DRAWINGS HERE IN.

6.7 THE NEOPRENE SEALS SHALL BE FIELD INSTALLED BY THE CONTRACTOR USING INSTALLATION TOOLS AND BONDED IN PLACE WITH PRIMA-LUB ADHESIVE. THE ADHESIVE SHALL BE APPLIED TO ALL NEOPRENE/STEEL CONTACT SURFACES. THE NEOPRENE SEAL SHALL BE SUPPLIED IN ONE CONTINUOUS PIECE. FACTORY SPLICE ARE REQUIRED TO ENSURE PROPER FIT OF NEOPRENE SEAL.

6.8 DISTORTED MEMBERS SHALL BE STRAIGHTENED BY MECHANICAL MEANS OR, IF APPROVED BY THE ENGINEER, BY CAREFULLY PLANNED PROCEDURE AND SUPERVISED APPLICATION OF A LIMITED AMOUNT OF LOCALIZED HEAT.

7.0 COATINGS

7.1 THE EXPANSION JOINT ASSEMBLY SHALL BE HOT DIP GALVANIZED IN ACCORDANCE WITH AASHTO M111.

7.2 GALVANIZED SURFACES THAT ARE DAMAGED AT ANY TIME AFTER THE APPLICATION OF THE ZINC COATING SHALL BE REPAIRED BY THE MANUFACTURER PRIOR TO SHIPPING USING ONE OF THE FOLLOWING PAINT WHICH MEET FEDERAL SPECIFICATIONS 800-P-21035A (FORMERLY MIL-P-21035) PER 9-08.2 "PAINT FORMULAS – GENERAL" OF THE STANDARD SPECIFICATION.

ZRC 221 GALVANIZING COMPOUND, ZRC WORLDWIDE
ZRC 2010 VOC WATER BASED GALVANIZING COMPOUND, ZRC WORLDWIDE
PRO INDUSTRIAL ZINC-CLAD COLD GALVANIZING (AEROSOL PRIMER), SHERWIN WILLIAMS

8.0 WEIGHT

8.1 THE APPROXIMATE WEIGHT OF THE EXPANSION JOINT ASSEMBLY IS 55 lb/FT.

APPROVED AS NOTED
WASHINGTON STATE
DEPARTMENT OF TRANSPORTATION
BRIDGE AND STRUCTURES OFFICE
BY: CONSTRUCTION SUPPORT ENGINEER
DATE SEP 22 2011

GEOMETRY NOT REVIEWED
BY THE BRIDGE & STRUCTURES BRANCH

2x1
TARK SYSTEM

STATE: WASHINGTON
COUNTY: CLARK & COWLITZ
FEDERAL AIDE
PROJECT NO.: IM-0051(285)
WBA PRODUCT NO.: SSR136864AA
JOINT TYPE: STRIP SEAL

DRAWING ACTION:
SUBMITTED FOR APPROVAL
9/15/11

Watson Bowman Acme

BASF The Chemical Company

PROJECT: E. FORK LEWIS RIVER BRIDGE
TO 7000 BD VICINITY PARKING & SAFETY
I-5 OVER BNSF & DIKE RD. BR. No. 5/104W
WBA STRIP SEAL TYPE "R" EXPANSION JOINT DETAILS

DRAWN BY TEB 9/15/11
CHECKED BY TPL 9/15/11
SCALE NTS
WBA JOB NO. 136864
SHEET NO. 1 of 4
DRAWING NO. E-29301

10/2011 12:56:27 PM

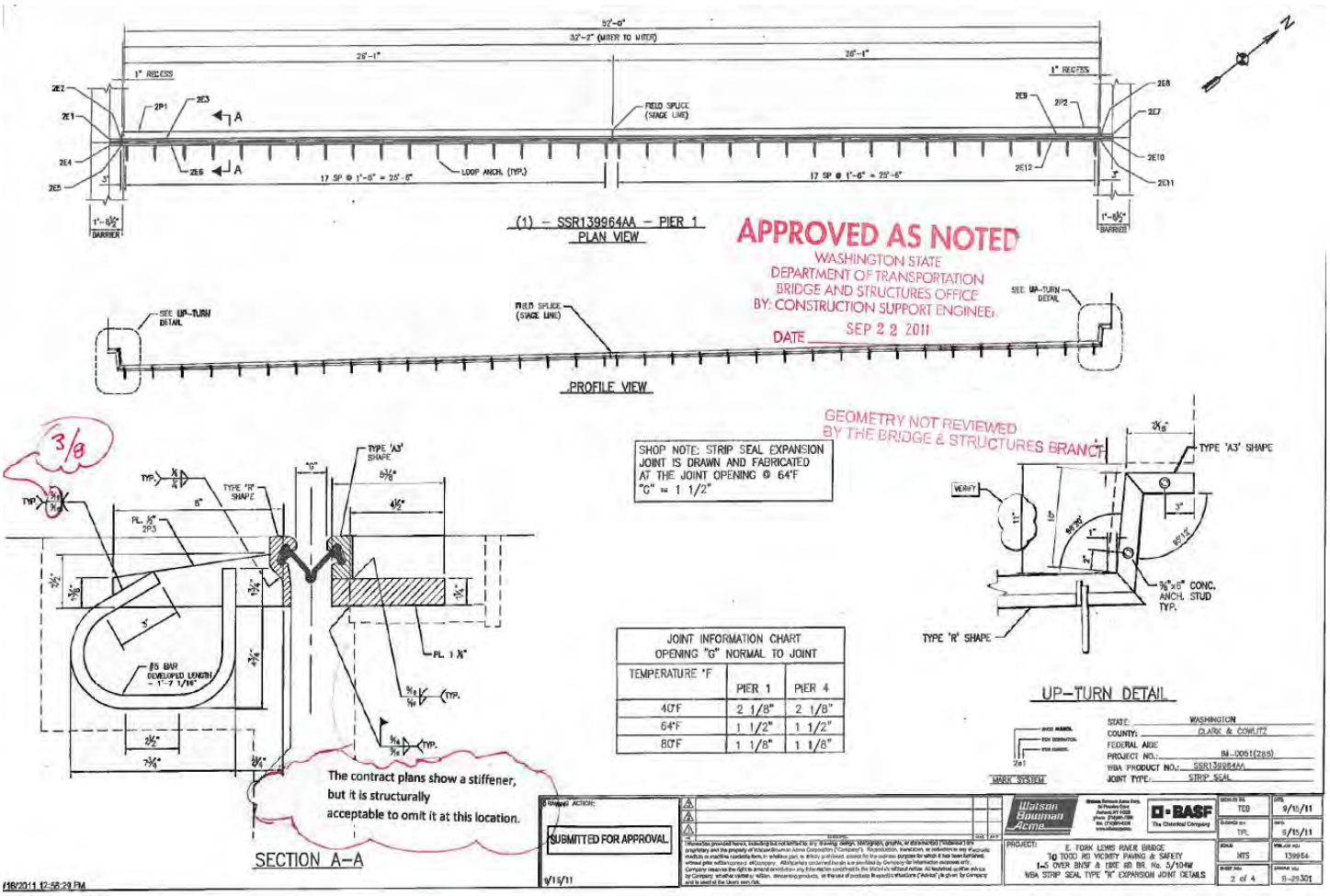
(1) – SSR139964AA – PIER 1
PLAN VIEW
APPROVED AS NOTED
WASHINGTON STATE
DEPARTMENT OF TRANSPORTATION
BRIDGE AND STRUCTURES OFFICE
BY: CONSTRUCTION SUPPORT ENGINEER
DATE SEP 2 2 2011
PROFILE VIEW
GEOMETRY NOT REVIEWED
BY THE BRIDGE & STRUCTURES BRANCH
SHOP NOTE: STRIP SEAL EXPANSION JOINT IS DRAWN AND FABRICATED AT THE JOINT OPENING @ 64°F "G" = 1 1/2"
JOINT INFORMATION CHART
OPENING "G" NORMAL TO JOINT
TEMPERATURE °F | PIER 1 | PIER 4
40°F | 2 1/8" | 2 1/8"
64°F | 1 1/2" | 1 1/2"
80°F | 1 1/8" | 1 1/8"
UP-TURN DETAIL
SECTION A–A
The contract plans show a stiffener, but it is structurally acceptable to omit it at this location.
SUBMITTED FOR APPROVAL
E. FORK LEWIS RIVER BRIDGE
TO TOOD RD VICINITY PAVING & SAFETY
I-5 OVER BNSF & EBE RD BR. No. 5/104W
WBA STRIP SEAL TYPE "K" EXPANSION JOINT DETAILS

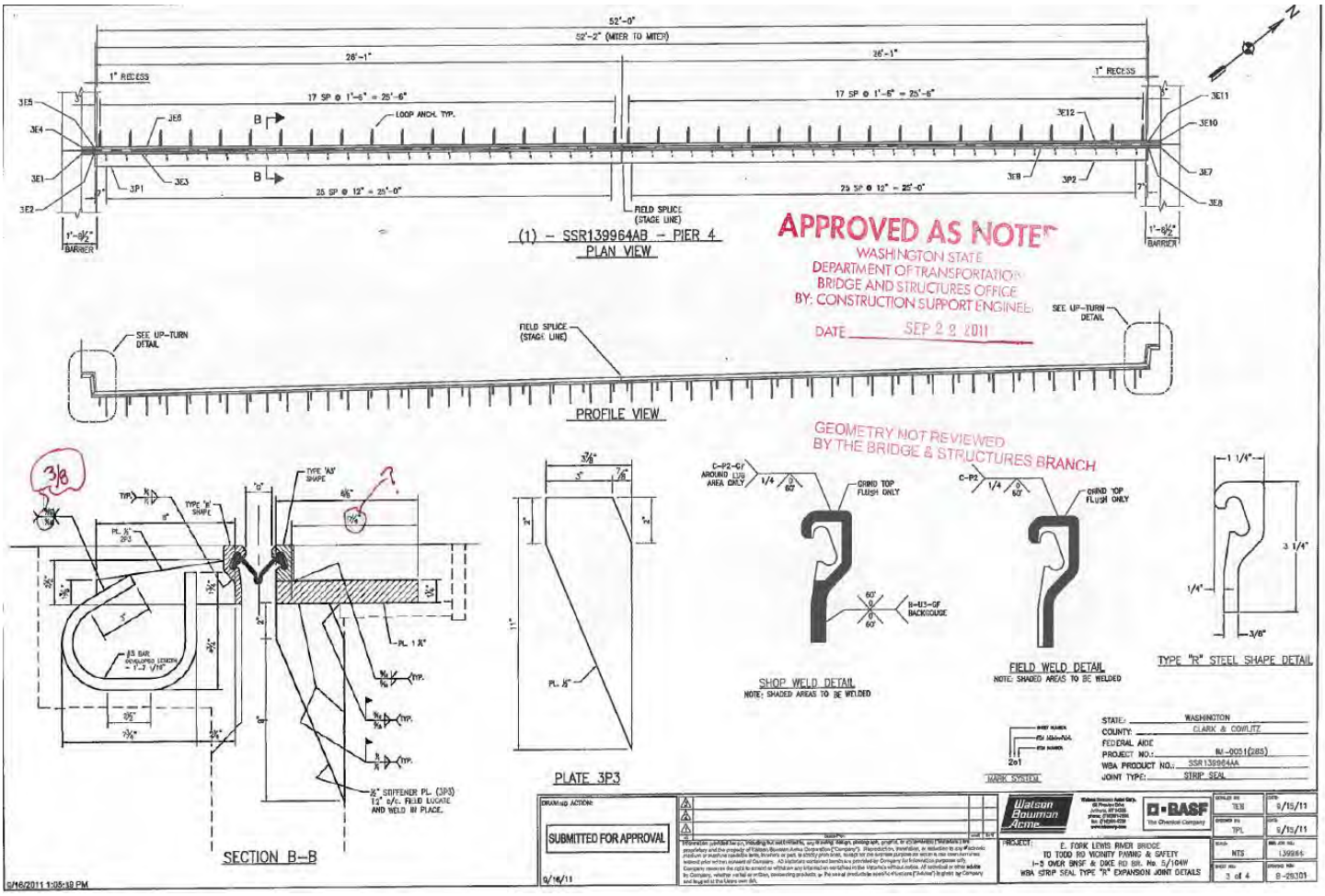
52'-0"
52'-2" (MITER TO MITER)
26'-1"
26'-1"
1" RECESS
1" RECESS
17 SP @ 1'-6" = 25'-6"
17 SP @ 1'-6" = 25'-6"
LOOP ANCH. TYP.
25 SP @ 12" = 25'-0"
25 SP @ 12" = 25'-0"
FIELD SPLICE (STAGE LINE)
1'-6½" BARRIER
(1) – SSR139964AB – PIER 4
PLAN VIEW
APPROVED AS NOTED
WASHINGTON STATE
DEPARTMENT OF TRANSPORTATION
BRIDGE AND STRUCTURES OFFICE
BY: CONSTRUCTION SUPPORT ENGINEER
DATE SEP 2 2 2011
SEE UP-TURN DETAIL
FIELD SPLICE (STAGE LINE)
PROFILE VIEW
GEOMETRY NOT REVIEWED
BY THE BRIDGE & STRUCTURES BRANCH
TYPE 'A' SHAPE
TYPE 'B' SHAPE
PL. ½" 3P3
#5 BAR
½" STIFFENER PL. (3P3) 12" o/c. FIELD LOCATE AND WELD IN PLACE.
SECTION B–B
PLATE 3P3
C-P2-GF AROUND LUG AREA ONLY
GRIND TOP FLUSH ONLY
B-E13-GF BACKGOUGE
SHOP WELD DETAIL
NOTE: SHADED AREAS TO BE WELDED
C-P2
GRIND TOP FLUSH ONLY
FIELD WELD DETAIL
NOTE: SHADED AREAS TO BE WELDED
TYPE "R" STEEL SHAPE DETAIL
STATE: WASHINGTON
COUNTY: CLARK & COWLITZ
FEDERAL AIDE
PROJECT NO.: NU-0051(285)
WBA PRODUCT NO.: SSR139964AA
JOINT TYPE: STRIP SEAL
MARK SYSTEM
DRAWING ACTION:
SUBMITTED FOR APPROVAL
9/16/11
Watson Bowman Acme
BASF
The Chemical Company
PROJECT: E. FORK LEWIS RIVER BRIDGE
TO TODD RD VICINITY PAVING & SAFETY
I-5 OVER BNSF & DIKE RD BR. No. 5/104W
WBA STRIP SEAL TYPE "R" EXPANSION JOINT DETAILS
9/15/11
9/15/11
NTS
139964
3 of 4
8-25301
9/16/2011 1:05:19 PM

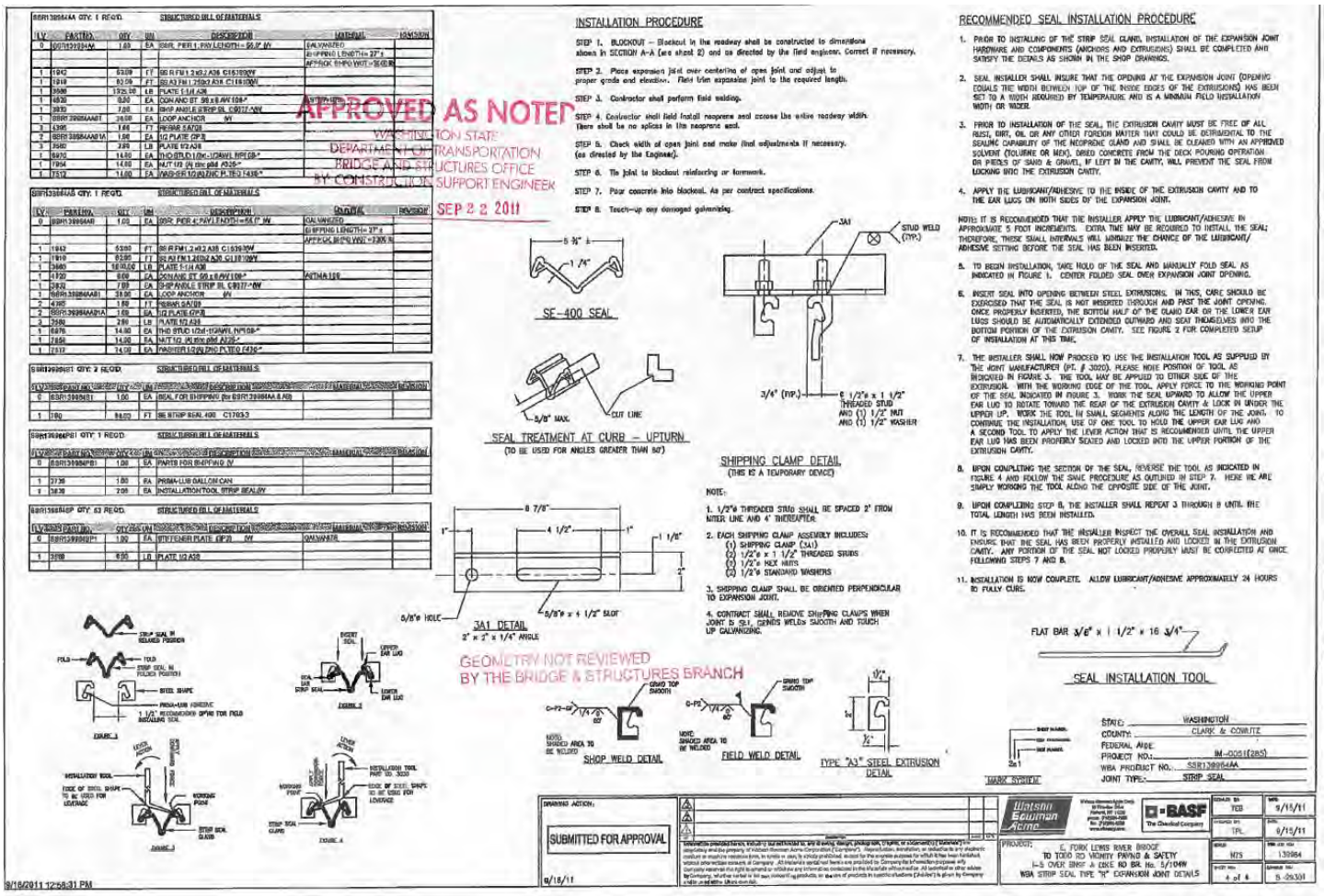
INSTALLATION PROCEDURE
RECOMMENDED SEAL INSTALLATION PROCEDURE
SE-400 SEAL
SEAL TREATMENT AT CURB – UPTURN
SHIPPING CLAMP DETAIL
3A1 DETAIL
SHOP WELD DETAIL
FIELD WELD DETAIL
TYPE "A3" STEEL EXTRUSION DETAIL
SEAL INSTALLATION TOOL
APPROVED AS NOTED
WASHINGTON STATE
DEPARTMENT OF TRANSPORTATION
BRIDGE AND STRUCTURES OFFICE
BY CONSTRUCTION SUPPORT ENGINEER
SEP 2 2 2011
GEOMETRY NOT REVIEWED
BY THE BRIDGE & STRUCTURES BRANCH
SUBMITTED FOR APPROVAL
9/16/11
BASF
WASHINGTON
CLARK & COWLITZ
IM-005I(285)
SSR13699AA
STRIP SEAL
E. FORK LEWIS RIVER BRIDGE
TO TOOD RD VICINITY PAVING & SAFETY
I-5 OVER BNSF & LEWIS RD BR. No. 5/104W
WSA STRIP SEAL TYPE "A" EXPANSION JOINT DETAILS
9/16/2011 12:58:31 PM

APPENDIX E

STRIP SEAL MANUFACTURER'S INSTALLATION PROCEDURE

GC-0008 R

Watson Bowman Acme

INSTALLATION PROCEDURE

Wabo®StripSeal Joint System
Armored Small Movement Expansion Joint System for Bridge & Highway Applications

A. General

The work shall consist of furnishing and installing a Wabo®StripSeal joint system in accordance with the details shown on the plans and the requirements of the specifications. The Wabo®StripSeal joint system is prefabricated.

B. Stage Construction

Depending on the time frame for the stage construction sequence, the neoprene seals may or may not be put into the steel rails in the shop.

If the field work schedule calls for a minimal time delay between respective installations of the two joint halves, the seals can be left out of the assemblies when they leave the shop. In this situation, the seals would then be field installed in continuous lengths panning the entire roadway width.

Should this method prove unacceptable, as in the case of significant delays between installation of the two halves, the first joint half can be shipped with temporary seals in place (at additional cost). Once the two joint sections have been coupled in the field, the temporary seals must be removed and the permanent full-length rubber shall be installed.

C. Field Preparation

Proper field handling is of utmost importance to avoid damage to the fabricated joint system while it is lifted and lowered into its final position. The joint system shall be set to line and grade, ensuring that the system's uppermost plane matches the finished roadway profile.

Before securing or casting in the joint system to the structure, the setting dimension shall be adjusted under the direction of the Field Engineer, to correspond to the proper ambient temperature dimension as shown on the shop drawings. The adjustment is accomplished by means of shipping devices, furnished by the manufacturer, which shall accompany the expansion joint system to the job site.

The structure temperature shall be measured by recording the surface temperature of the concrete and/or steel with a surface thermometer as described below.

Record the temperature of the underside of the concrete slab at each end of the superstructure element adjacent to the expansion joint. Take the average of the readings to use with the temperature chart shown on the plans. In lieu of surface readings, internal slab readings may be taken by drilling a 1/4" diameter hole 3" into the concrete slab; filling the hole with water and inserting a probe thermometer.

Bridge & Highway
1 of 2

INSTALLATION PROCEDURE

Wabo®StripSeal Joint System
Armored Small Movement Expansion Joint System for Bridge & Highway Applications

C. Field Splicing

If the system is to be installed in sections, the manufacturer will ship the joint with the appropriate ends beveled for field welding. Once the first joint section is installed and concrete has been cast, the adjacent length is field welded. Special care should be taken to the field weld details shown on the manufacturer's shop drawings.

D. Final Joint Placement

Complete all bolted and welded connections to the superstructure. Properly place formwork to maintain joint opening. Prior to placement of the concrete, all shipping devices shall be removed. Devices on top of the joint may remain if their location will not interfere with concrete placement.

When casting the joint system into the structure, care should be taken so that proper compaction of concrete around the system is achieved.

E. Seal Installation

The neoprene seals shall be field installed in continuous lengths spanning the entire roadway width. To ensure proper fit of the seal and increase the ease of installation, dirt, spatter or standing water shall be removed from the steel cavity using a brush, scraper or compressed air.

Apply Wabo®PrimaLub by brush to the full perimeter on the walls of the steel shape machined cavity. (Refer to sketch below.)

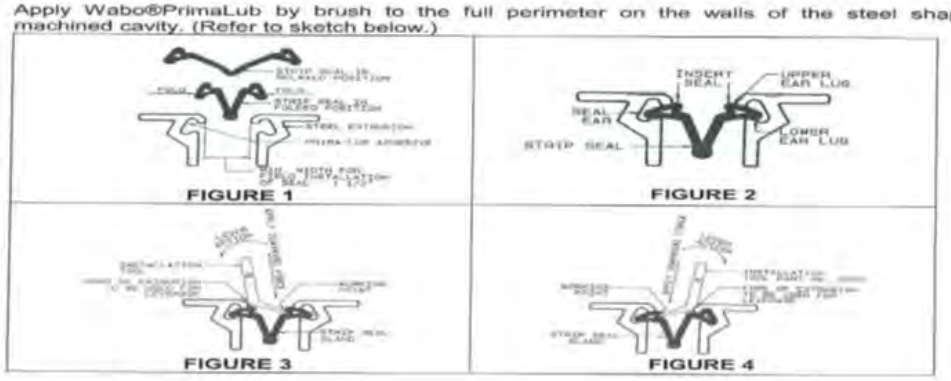

FIGURE 1 FIGURE 2 FIGURE 3 FIGURE 4

APPENDIX F

CONSTRUCTION PHOTOS

Photo No. 1 – Original Expansion Joint Prior to Demolition

Photo No. 2 – Demolished Expansion Joint

Photo No. 3 – New Steel Extrusions In Place Prior to Concrete Placement

Photo No. 4 – White Paint on Gland Ear

Photo No. 5 – Paint Stripe Removal and Cracks Over Anchorage Plates

APPENDIX G

STRIP SEAL JOINT REPAIR PHOTOS

Photo No. 1 – WSDOT Maintenance Crew Removing Steel Extrusion From Abutment Side

Photo No. 2 – Steel Extrusion That Was Remove

Photo No. 3 – Header After Steel Extrusion Was Removed

Photo No. 4 – Completed Repair

APPENDIX H

SITE VISIT PHOTOS
(Taken 7/28/15)

Photo No. 1 – North Abutment

Expansion Joint

Photo No. 2 – North Abutment

Expansion Joint From Below

Photo No. 3 – Potholes Forming in Right Lane Wheel Lines (North Abutment)

Photo No. 4 – South Abutment Expansion Joint

Photo No. 5 – South Abutment Strip Seal Expansion Joint From Below

Photo No. 6 – South Abutment Strip Seal Joint Gland w/ Paint on Upper Ears

Photo No. 7 – Concrete Adhered to Bottom of Strip Seal Gland (South Abutment Joint)

Photo No. 8 – Concrete Adhered to Bottom of Strip Seal Gland (South Abutment Joint)

APPENDIX I

SUMMARY OF INSPECTOR'S DAILY REPORTS

Summary of Inspector's Dailey Reports for Bridge 5/104W Expansion Joint Replacement (C-8150)

Summary of Inspector's Dailey Reports for Bridge 5/104W Expansion Joint Replacement (C-8150)

Date	Activity	Location	Comment
6/7/2012	Demolition of Expansion Joints	West Half - North & South Joints	
6/8/2012	Demolition of Expansion Joints Continued	West Half - North & South Joints	
6/11/2012	Grinding Down Existing Steel Plate to Allow Installation of New Joint	West Half	
6/11/2012	Placement of New Expansion Joint Reinforcing Steel	West Half	Rebar dowels installed with Hilti HTE50
6/11/2012	Welding of Joint to Existing Embedded Plate	West Half	
6/12/2012	Inspector Notices Errors in Joint Placement	West Half	
6/12/2012	Rebar Placement and Welding Continued	West Half	
6/13/2012	Rebar Placement Continued	West Half - North	
6/13/2012	Elastomeric Concrete Placement	West Half - North & South Joints	Wabo Crete II Used. Watson Bowman Representative on Site (Bruce Hutchinson)
6/15/2012	Concrete Header Placement	West Half - North & South Joints	
6/17/2015	Temporary Striping / Lane Shift		
6/18/2012	Demolition of Expansion Joints	East Half	
6/18/2012	Welding of Joint to Existing Embedded Plate	East Half - North	
6/19/2012	Reinforcing Steel Dowels Placed	East Half - North	
6/19/2012	Concrete Header Placement	East Half - North	Inspector #1 (R. Mistic) states "Discussed lateral movement of joint with Paul and Scott and issue with splice welding abutment side of joint." Inspector #2 (N. Roge) states "Angle iron pieces used to stabilize header nosings during welding removed"
6/20/2012	Elastomeric Concrete Placement	East Half - North	Wabo Crete II Used. Watson Bowman representative contacted via telephone (Bruce Hutchinson)
6/21/2012	Elastomeric Concrete Placement	East Half - South	
6/21/2012	Gland Installed	North & South Joints	
6/27/2012	Inspector Notes Deficiencies - Strip seal not fully seated in channel - Strip seal at curb-lines cut or not in channels - Spalling on approach side of North joint at and near where temp stripe was removed apparently with grinder - approach side longitudinal cracking within newly placed expansion joint header concrete - Elastomeric concrete pulled away from strip seal steel at center of structure at splice weld location on South joint	North & South Joints	The note indicates these deficiencies are to be included in the punch list. However, there is a hand written note dated 7/9/12 that says "WSDOT will address per conversation/direction with BSO". The hand written note is initialed SAS....which is Scott Seroshek.
12/12/2012	Scott Seroshek Note reads " I met with Mike London at Bridge 5/104W to determine if the rubber gland installation in the strip seal was acceptable and seated properly, as the deck had been flooded. Mike confirmed the gland installation was acceptable.		

APPENDIX J

WSDOT BRIDGE DESIGN MANUAL—SECTION 9.1 EXPANSION JOINTS

Chapter 9 Bearings and Expansion Joints

9.1 Expansion Joints

9.1.1 General Considerations

All bridges must accommodate, in some manner, environmentally and self-imposed phenomena that tend to make structures move in various ways. These movements come from several primary sources: thermal variations, concrete shrinkage, creep effects from prestressing, and elastic post-tensioning shortening. With the exception of elastic post-tensioning shortening, which generally occurs before expansion devices are installed, movements from these primary phenomena are explicitly calculated for expansion joint selection and design. Other movement inducing phenomena include live loading (vertical and horizontal braking), wind, seismic events, and foundation settlement. Movements associated with these phenomena are generally either not calculated or not included in total movement calculations for purposes of determining expansion joint movement capacity.

With respect to seismic movements, it is assumed that some expansion joint damage may occur, that this damage is tolerable, and that it will be subsequently repaired. In cases where seismic isolation bearings are used, the expansion joints must accommodate seismic movements in order to allow the isolation bearings to function properly.

Expansion joints must accommodate cyclic and long-term structure movements in such a way as to minimize imposition of secondary stresses in the structure. Expansion joint devices must prevent water, salt, and debris infiltration to substructure elements below. Additionally, an expansion joint device must provide a relatively smooth riding surface over a long service life.

Expansion joint devices are highly susceptible to vehicular impact that results as a consequence of their inherent discontinuity. Additionally, expansion joints have often been relegated a lower level of importance by both designers and contractors. Many of the maintenance problems associated with in-service bridges relate to expansion joints.

One solution to potential maintenance problems associated with expansion joints is to use construction procedures that eliminate the joints from the bridge deck. The two most commonly used methods are called integral and semi-integral construction. These two terms are sometimes collectively referred to as jointless bridge construction.

In integral construction, concrete end diaphragms are cast monolithically with both the bridge deck and supporting pile substructure. In order to minimize secondary stresses induced in the superstructure, steel piles are generally used in their weak axis orientation relative to the direction of bridge movement. In semi-integral construction, concrete end diaphragms are cast monolithically with the bridge deck. Supporting girders rest on elastomeric bearings within an L-type abutment. Longer semi-integral bridges generally have reinforced concrete approach slabs at their ends. Approach slab anchors, in conjunction with a compression seal device, connect the monolithic end diaphragm to the approach slab. Longitudinal movements are accommodated by diaphragm movement relative to the approach slab, but at the same time resisted by soil passive pressure against the end diaphragm.

Obviously, bridges cannot be built incrementally longer without eventually requiring expansion joint devices. The incidence of approach pavement distress problems increases markedly with increased movement that must be accommodated by the end diaphragm pressing against the backfill. Approach pavement distress includes pavement and backfill settlement and broken approach slab anchors.

Washington State Department of Transportation (WSDOT) has implemented jointless bridge design by using semi-integral construction. Office policy for concrete and steel bridge design is as follows:

A. Concrete Bridges

Semi-integral design is used for prestressed concrete girder bridges under 450 feet long and for post-tensioned spliced concrete girder and cast-in-place post-tensioned concrete box girder bridges under 400 feet long. Use L-type abutments with expansion joints at the bridge ends where bridge length exceeds these values. In situations where bridge skew angles exceed 30 degrees, consult the Bearing and Expansion Joint Specialist and the Bridge Design Engineer for recommendations and approval.

B. Steel Bridges

Use L-type abutments with expansion joints at the ends for multiple-span bridges. Semi-integral construction may be used in lieu of expansion joints for single span bridges under 300 feet with the approval of the Bridge Design Engineer. In situations where the bridge skew exceeds 30 degrees, consult the Bearing and Expansion Joint Specialist and the Bridge Design Engineer for recommendations and approval.

In all instances, the use of intermediate expansion joints should be avoided wherever possible. The following table provides guidance regarding maximum bridge superstructure length beyond which the use of either intermediate expansion joints or modular expansion joints at the ends is required.

Superstructure Type	Maximum Length (Western WA)		Maximum Length (Eastern WA)	
	Semi-Integral	L-Abutment	Semi-Integral	L-Abutment
Concrete Superstructure				
Prestressed Girder*	450 ft	900 ft	450 ft	900 ft
P.T. Spliced Girder**	400 ft	700 ft***	400 ft	700 ft***
C.I.P.–P.T. box girder	400 ft	700 ft ***	400 ft	700 ft***
Steel Superstructure				
Plate Girder Box girder	300 ft	1,000 ft	300 ft	800 ft

* Based upon 0.16 in. creep shortening per 100 ft. of superstructure length and 0.12 in. shrinkage shortening per 100 ft. of superstructure length

** Based upon 0.31 in. creep shortening per 100 ft. of superstructure length and 0.19 in. shrinkage shortening per 100 ft. of superstructure length

*** Can be increased to 800 ft. if the joint opening at 64° F at time of construction is specified in the expansion joint table to be less than the minimum installation width of 1½ in. This condition is acceptable if the gland is already installed when steel shapes are placed in the blockout. Otherwise (for example, staged construction) the gland would need to be installed at temperature less than 45° F.

Because the movement restriction imposed by a bearing must be compatible with the movements allowed by the adjacent expansion joint, expansion joints and bearings must be designed interdependently and in conjunction with the anticipated behavior of the overall structure.

A plethora of manufactured devices exists to accommodate a wide range of expansion joint total movements. Expansion joints can be broadly classified into three categories based upon their total movement range as follows:

Small Movement Joints	Total Movement Range < 1¾ in.
Medium Movement Joints	1¾ in. < Total Movement Range < 5 in.
Large Movement Joints	Total Movement Range > 5 in.

9.1.2 General Design Criteria

Expansion joints must be sized to accommodate the movements of several primary phenomena imposed upon the bridge following installation of its expansion joint devices. Concrete shrinkage, thermal variation, and long-term creep are the three most common primary sources of movement. Calculation of the movements associated with each of these phenomena must include the effects of superstructure type, tributary length, fixity condition between superstructure and substructure, and pier flexibilities.

A. Shrinkage Effects

Accurate calculation of shrinkage as a function of time requires that average ambient humidity, volume-to-surface ratios, and curing methods be taken in consideration as summarized in LRFD Article 5.4.2.3.3. Because expansion joint devices are generally installed in their respective blockouts at least 30 to 60 days following concrete deck placement, they must accommodate only the shrinkage that occurs from that time onward. For most situations, that shrinkage strain can be assumed to be 0.0002 for normal weight concrete in an unrestrained condition. This value must be corrected for restraint conditions imposed by various superstructure types.

$$\otimes_{shrink} = \beta \cdot \mu \cdot L_{trib} \qquad (9.1.2\text{-}1)$$

Where:

L_{trib} = Tributary length of the structure subject to shrinkage

β = Ultimate shrinkage strain after expansion joint installation; estimated as 0.0002 in lieu of more refined calculations

μ = Restraint factor accounting for the restraining effect imposed by superstructure elements installed before the concrete slab is cast

= 0.0 for steel girders, 0.5 for precast prestressed concrete girders, 0.8 for concrete box girders and T-beams, 1.0 for concrete flat slabs

B. Thermal Effects

Bridges are subject to all modes of heat transfer: radiation, convection, and conduction. Each mode affects the thermal gradients generated in a bridge superstructure differently. Climatic influences vary geographically resulting in different seasonal and diurnal average temperature variations. Additionally, different types of construction have different thermal "inertia" properties. For example, a massive concrete box girder bridge will be much slower to respond to an imposed thermal stimulus than would a steel plate girder bridge composed of many relatively thin steel elements.

Variation in the superstructure average temperature produces elongation or shortening. Therefore, thermal movement range is calculated using the maximum and minimum anticipated bridge superstructure average temperatures anticipated during the structure's lifetime. The considerations in the preceding paragraph have led to the following maximum and minimum anticipated bridge superstructure average temperature guidelines for design in Washington State:

Concrete Bridges:	0°F to 100°F
Steel Bridges (eastern Washington)	-30°F to 120°F
Steel Bridges (western Washington)	0°F to 120°F

Total thermal movement range is then calculated as:

$$\otimes_{temp} = \alpha \cdot L_{trib} \cdot \delta T \qquad (9.1.2\text{-}2)$$

Where:

L_{trib} = Tributary length of the structure subject to thermal variation

α = Coefficient of thermal expansion; 0.000006 in./in./°F for concrete and 0.0000065 in./in./°F for steel

δT Bridge superstructure average temperature range as a function of bridge type and location

In accordance with *Standard Specifications*, contract drawings state dimensions at a normal temperature of 64°F unless specifically noted otherwise. Construction and fabrication activities at average temperatures other than 64°F require the Contractor or fabricator to adjust lengths of structural elements and concrete forms accordingly.

Some expansion joint devices are installed in pre-formed concrete blockouts sometime after the completion of the bridge deck. The expansion joint device must be cast into its respective blockout with a gap setting corresponding to the ambient superstructure average temperature at the time the blockouts are filled with concrete. In order to accomplish this, expansion device gap settings must be specified on the contract drawings as a function of superstructure ambient average temperature. Generally, these settings are specified for temperatures of 40°F, 64°F, and 80°F.

9.1.3 Small Movement Range Joints

Elastomeric compression seals, poured sealants, asphaltic plugs, pre-formed closed cell foam, epoxy-bonded elastomeric glands, steel sliding plates, and bolt-down elastomeric panels have all been used in the past for accommodating small movement ranges. The current policy is to use compression seals and rapid-cure silicone sealants almost exclusively.

A. Compression Seals

Compression seals are continuous manufactured elastomeric elements, typically with extruded internal web systems, installed within an expansion joint gap to effectively seal the joint against water and debris infiltration. Compression seals are held in place by mobilizing friction against adjacent vertical joint faces. Design philosophy requires that they be sized and installed to always be in a state of compression.

Compression seals can be installed against smooth vertical concrete faces or against steel armoring. When installed against concrete, special concrete nosing material having enhanced impact resistance is typically used. Polymer concrete, polyester concrete, and elastomeric concrete have been used with varying degrees of successful performance. Consult the Bearing and Expansion Joint Specialist for current policy.

Each elastomeric compression seal shall be furnished and installed as a single, continuous piece across the full width of the bridge deck. No field splices of the compression seal shall be allowed. For widening projects, a new compression seal shall be furnished and installed as a single, continuous piece across the full width of the original and widened portions of the roadway. Field splicing to the original elastomeric compression seal shall not be allowed.

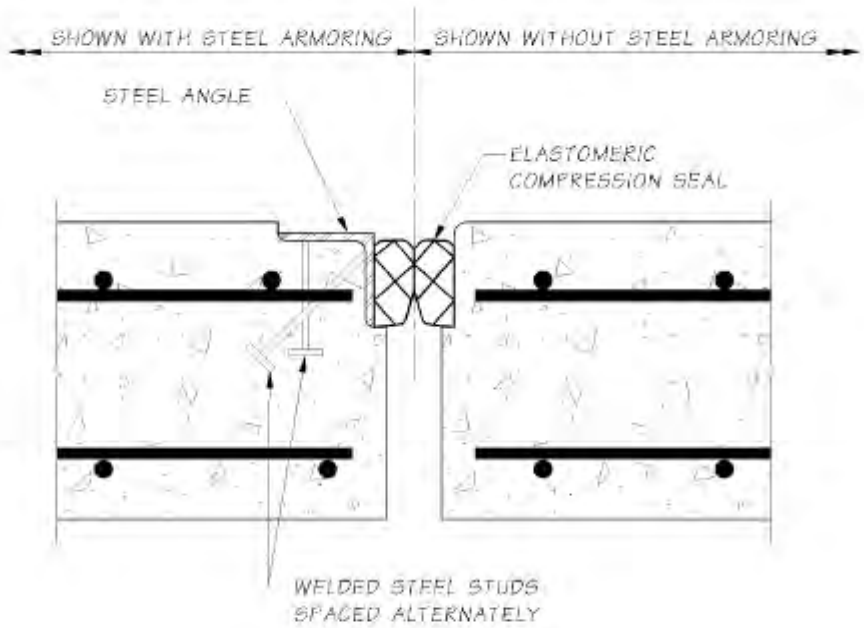

Compression Seal Joint
Figure 9.1.3-1

In design calculations, the minimum and maximum compressed widths of the seal are generally set at 40 percent and 85 percent of the uncompressed width. These measurements are perpendicular to the joint axis. It is generally assumed that the compressed seal width at the normal construction temperature of 64°F is 60 percent of its uncompressed width. For skewed joints, bridge deck movement must be separated into components perpendicular to and parallel to the joint axis. Shear displacement of the compression seal should be limited to a specified percentage of its uncompressed width, usually set at about 22 percent. Additionally, the expansion gap width should be set so that the compression seal can be replaced over a reasonably wide range of construction temperatures. Manufacturers' catalogues generally specify the minimum expansion gap widths into which specific size compression seals can be installed. The expansion gap width should be specified on the contract drawings as a function of the superstructure average temperature.

Compression seal movement design relationships can be expressed as:

$\otimes_{temp\text{-}normal} = \otimes_{temp} \cdot \cos\theta$ [thermal movement normal to joint]
$\otimes_{temp\text{-}parallel} = \otimes_{temp} \cdot \sin\theta$ [thermal movement parallel to joint]
$\otimes_{shrink\text{-}normal} = \otimes_{shrink} \cdot \cos\theta$ [shrinkage movement normal to joint]
$\otimes_{shrink\text{-}parallel} = \otimes_{shrink} \cdot \sin\theta$ [shrinkage movement parallel to joint]
$W_{min} = W_{install} - [(T_{max}-T_{install})/(T_{max}-T_{min})] \cdot \Delta_{temp\text{-}normal} > 0.40 \cdot W$
$W_{max} = W_{install} + [(T_{install}-T_{min})/(T_{max}-T_{min})] \cdot \Delta_{temp\text{-}normal} + \Delta_{shrink\text{-}normal} < 0.85 \cdot W$

Where:

θ = skew angle of the expansion joint, measured with respect to a line perpendicular to the bridge longitudinal axis

W = uncompressed width of the compression seal
$W_{install}$ = expansion gap width at installation
$T_{install}$ = superstructure temperature at installation
W_{min} = minimum expansion gap width
W_{max} = maximum expansion gap width
T_{min} = minimum superstructure average temperature
T_{max} = maximum superstructure average temperature

Algebraic manipulation yields:

$$W > (\otimes_{temp\text{-}normal} + \otimes_{shrink\text{-}normal})/0.45$$

$$W > (\otimes_{temp\text{-}parallel} + \otimes_{shrink\text{-}parallel})/0.22$$

Now, assuming $W_{install} = 0.6 \cdot W$,

$$W_{max} = 0.6 \cdot W + [(T_{install} - T_{min})/(T_{max} - T_{min})] \cdot \otimes_{temp\text{-}normal} + \otimes_{shrink\text{-}normal} < 0.85 \cdot W$$

Rearranging yields:

$$W > 4 \cdot [(T_{install} - T_{min})/(T_{max} - T_{min}) \cdot \otimes_{temp\text{-}normal} + \otimes_{shrink\text{-}normal}]$$

Design Example:

Given: A reinforced concrete box girder bridge has a total length of 200 feet. A compression seal expansion joint at each abutment will accommodate half of the total bridge movement. The abutments and expansion joints are skewed 15°. Bridge superstructure average temperatures are expected to range between 0°F and 100°F.

Find: Required compression seal size and construction gap widths at 40°F, 64°F, and 80°F.

Solution:

Step 1: Calculate temperature and shrinkage movement.

Temperature: $\otimes_{temp} = ½(.000006)(100°F)(200')(12''/') = 0.72''$
Shrinkage: $\otimes_{shrink} = ½(.0002)(0.8)(200')(12''/') = \underline{0.19''}$
Total deck movement at the joint: $= 0.91''$

$\otimes_{temp\text{-}normal} + \otimes_{shrink\text{-}normal} = (0.91'')(\cos 15°) = 0.88''$

$\otimes_{temp\text{-}parallel} + \otimes_{shrink\text{-}parallel} = (0.91'')(\sin 15°) = 0.24''$

Step 2: Determine compression seal width required.

$W > 0.88''/0.45 = 1.96''$

$W > 0.24''/0.22 = 1.07''$

$W > 4[(64°F–0°F)/(100°F–0°F) \cdot (0.72'') + 0.19''] (\cos 15°) = 2.51''$
→Use a 3″ compression seal

Step 3: Evaluate construction gap widths for various temperatures for a 3 inch compression seal.

Construction width at 64°F = 0.6(3″) = 1.80″

Construction width at 40°F = 1.80″ + [(64°–40°)/(100° + 0°)]·(0.72″)·(cos 15°) = 1.97″

Construction width at 80°F = 1.80″ - [(80°–64°)/(100° + 0°)]·(0.72″)·(cos 15°) = 1.69″

Conclusion: Use a 3 inch compression seal. Construction gap widths for installation at temperatures of 40°F, 64°F, and 80°F are 2 in., 1-13/16 in., and 1-11/16 in. respectively.

B. Rapid-Cure Silicone Sealants

Durable low-modulus poured sealants provide watertight expansion joint seals in both new construction and rehabilitation projects. Most silicone sealants possess good elastic performance over a wide range of temperatures while demonstrating high levels of resistance to ultraviolet and ozone degradation. Other desirable properties include self-leveling and self-bonding characteristics.

Rapid-cure silicone sealants are particularly good candidates for rehabilitation in situations where significant traffic disruption consequential to extended traffic lane closure is unacceptable. Additionally, unlike compression seals, rapid-cure silicone sealants do not require straight, parallel substrate surfaces in order to create a watertight seal.

Rapid-cure silicone sealants can be installed against either concrete or steel. It is extremely critical that concrete or steel substrates be thoroughly cleaned before the sealant is installed. Some manufacturers require application of specific primers onto substrate surfaces prior to sealant installation in order to enhance bonding.

Consult the Bearing and Expansion Joint Specialist for specifics.

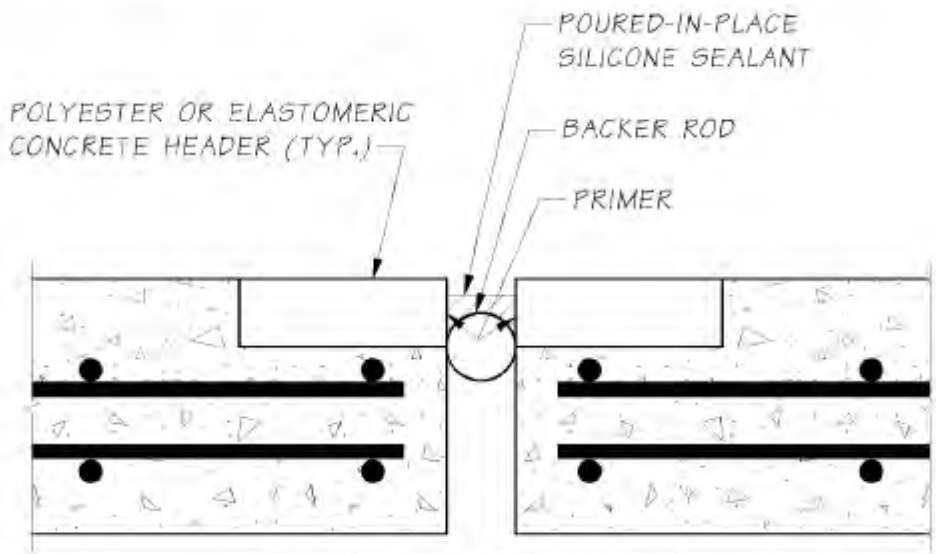

Rapid-cure Silicone Sealants Joint
Figure 9.1.3-2

Rapid-cure silicone sealants should be designed based upon the manufacturer's recommendations. Maximum and minimum working widths of the poured sealant joint are generally recommended as a percentage of the sealant width at installation. Depending upon the manufacturer, these joints can accommodate tensile movements of up to 100 percent and compressive movements of up to 50 percent of the sealant width at installation. A minimum recess is typically required between the top of the roadway surface and the top of the sealant surface. This recess is critical in assuring that tires will not contact the top surface of the sealant and initiate its debonding from substrate material.

Design Example:

Given: An existing 25-year-old 160 ft. long single span prestressed concrete girder bridge is scheduled for a concrete overlay. The existing compression seals at each non-skewed abutment are in poor condition, although the existing concrete edges on each side of each expansion joint are in relatively good condition. The expansion gaps at these abutments are 1in. wide at a normal temperature of 64°F. Assume that each expansion joint will accommodate half of the total bridge movement. Bridge superstructure average temperatures are expected to range between 0°F and 100°F.

Find: Determine the feasibility of reusing the existing 1 in. expansion gaps for a rapid cure silicone sealant system retrofit. Assume that the sealant will be installed at an average superstructure temperature between 40°F and 80°F. Manufacturer's recommendations state that Sealant A can accommodate 100 percent tension and 50 percent compression and that Sealant B can accommodate 50 percent tension and 50 percent compression.

Solution:

Step 1: Calculate future temperature, shrinkage, and creep movements.

Temperature: Δ_{temp} = ½ (.000006)(100°F)(160')(12"/') = 0.58"
Shrinkage: Δ_{shrink} = 0 (Essentially all shrinkage has already occurred.)
Creep: Δ_{creep} = 0 (Essentially all creep has already occurred.)

Step 2: Calculate existing expansion gap widths at average superstructure temperatures of 40°F and 80°F. These are estimated extreme sealant installation temperatures.

G_{40F} = 1.00" + [(64°F - 4 0°F)/(100°F - 0°F)] · (.58") = 1.14"
G_{80F} = 1.00" - [(80°F - 64°F)/(100°F - 0°F)] · (.58") = 0.91"

Step 3: Check sealant capacity if installed at 40°F.

Closing movement = [(100°F - 40°F)/(100°F - 0°F)](.58") = 0.35"
0.35"/1.14" = 0.31 < 0.50 Sealants A and B
Opening movement = [(40°F - 0°F)/(100°F - 0°F)](.58") = 0.23"
0.23"/1.14" = 0.20 < 1.00 Sealant A< 0.50 Sealant B

Step 4: Check sealant capacity if installed at 80° F.

Closing movement = = [(100°F - 80°F)/(100°F - 0°F)](.58") = 0.12"
0.12"/0.91" = 0.13 < 0.50 Sealants A and B
Opening movement = [(80°F - 0°F)/(100°F - 0°F)](.58") = 0.46"
0.46"/0.91" = 0.50 < 1.00 Sealant A
= 0.50 Sealant B

Conclusion: The existing 1 in. expansion gap is acceptable for installation of a rapid cure silicone sealant system. Note that Sealant B would reach its design opening limit at 0°F if it were installed at a superstructure average temperature of 80°F. Expansion gap widths at temperatures other than the normal temperature are generally not specified on rapid cure silicone sealant retrofit plans.

C. Asphaltic Plug Joints

Asphaltic plug joints consist of a flexible polymer modified asphalt installed in a preformed blockout atop a steel plate and backer rod. In theory, asphaltic plug joints provided a seamless smooth riding surface. However, when subjected to high traffic counts, heavy trucks, or substantial acceleration/deceleration traction, the polymer modified asphalt tends to creep, migrating out of the blockouts. As a consequence, WSDOT no longer specifies the use of asphaltic plug joints.

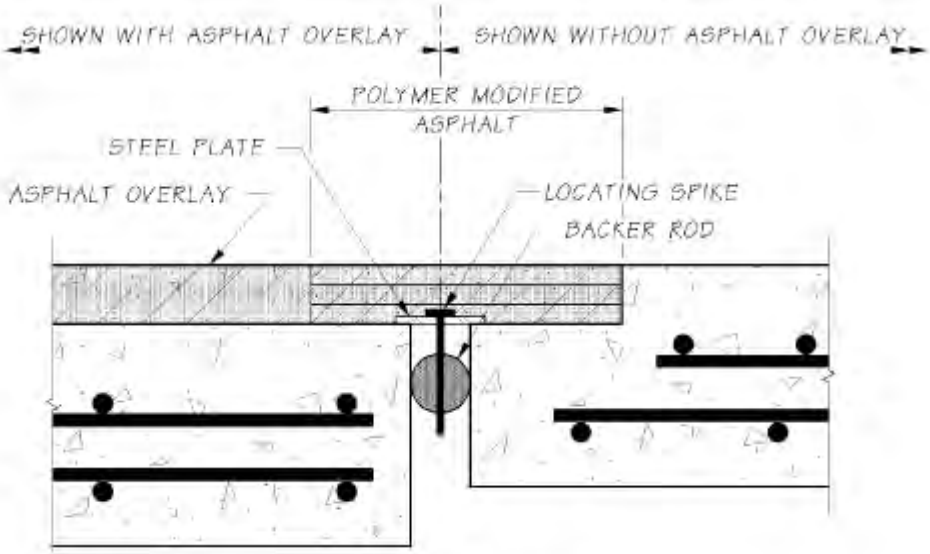

Asphaltic Plug Joint
Figure 9.1.3-3

D. Headers

Expansion joint headers for new construction are generally the same Class 4000D structural concrete as used for the bridge deck and cast integrally with the deck.

Expansion joint headers installed as part of a rehabilitative and/or overlay project are constructed differently.

Being a flexible material, hot mix asphalt (HMA) cannot provide rigid lateral support to an elastomeric compression seal or a rapid cure silicone sealant bead. Therefore, rigid concrete headers must be constructed on each side of such an expansion joint when an HMA overlay is installed atop an existing concrete deck. These headers provide a rigid lateral support to the expansion joint device and serve as a transition between the HMA overlay material and the expansion joint itself.

WSDOT allows either polyester concrete or elastomeric concrete for expansion joint headers. These two materials, which provide enhanced durability to impact in regard to other concrete mixes, shall be specified as alternates in the contract documents. General Special Provisions specify the material and construction requirements for polyester and elastomeric concrete.

Modified concrete overlay (MCO) material can provide rigid side support for an elastomeric compression seal or a rapid cure silicone sealant bead without the need for separately constructed elastomeric concrete or polyester concrete headers. This alternative approach requires the approval of the Bearing and Expansion.

Joint Specialist. Such modified concrete overlay headers may utilize welded wire fabric as reinforcement. Contract 7108 which includes Bridges No. 90/565N&S and 90/566N&S is an example.

9.1.4 Medium Movement Range Joints

Steel sliding plates, strip seals, and bolt-down panel joints have all been used in the past for accommodating medium movement ranges. The current policy is to use strip seal joints almost exclusively.

A. Steel Sliding Plate Joints

Two overlapping steel plates, one attached to the superstructure on each side of the joint, can be used to provide a smooth riding surface across an expansion joint. Unfortunately, steel sliding plates do not generally provide an effective barrier against intrusion of water and deicing chemicals into the joint and onto substructure elements. Consequently, these joints have been supplanted by newer systems, such as strip seals, with improved resistance to water penetration.

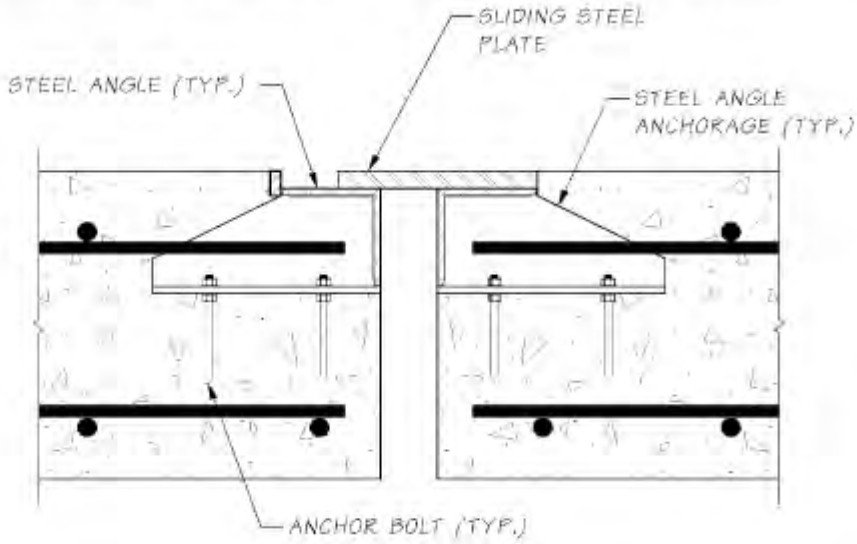

Steel Sliding Plate Joint
Figure 9.1.4-1

Before the advent of more modern systems, steel sliding plates were specified extensively. Their limited use today includes the following specific applications:

1. High pedestrian use sidewalks
2. Modular expansion joint upturns at traffic barriers
3. Roadway applications involving unusual movements (translation and large rotations) not readily accommodated by modular expansion joints.

In these applications, the sliding plates are generally galvanized or painted to provide corrosion resistance.

Repeated impact and corrosion have deteriorated many existing roadway sliding steel plate systems. In many instances, the anchorages connecting the sliding plate to the concrete deck have broken. When the integrity of the anchorages has been compromised, the steel sliding plates must generally be removed in their entirety and replaced with a new, watertight system. Where the integrity of the anchorages has not been compromised, sliding plates can often be retrofitted with poured sealants or elastomeric strip seals.

B. Strip Seal Joints

An elastomeric strip seal system consists of a preformed elastomeric gland mechanically locked into metallic edge rails generally embedded into the concrete deck on each side of an expansion joint gap. Unfolding of the elastomeric gland accommodates movement. Steel studs are generally welded to the steel extrusions constituting the edge rails to facilitate anchorage to the concrete deck. Damaged or worn glands can be replaced with minimal traffic disruption.

The metal edge rails effectively armor the edges of the expansion joint, obviating the need for a special impact resistant concrete, usually required at compression seal and poured sealant joints. The designer must select either the standard or special anchorage. The special anchorage incorporates steel reinforcement bar loops welded to intermittent steel plates, which in turn are welded to the extrusion. The special anchorage is generally used for very high traffic volumes or in applications subject to snowplow hits. In applications subject to snowplow hits and concomitant damage, the intermittent steel plates can be detailed to protrude slightly above the roadway surface in order to launch the snowplow blade and prevent it from catching on the forward extrusion.

The special anchorage requires a 9 inches deep blockout, as opposed to 7 inches deep for the standard anchorage. The standard anchorage is acceptable for high traffic volume expansion joint replacement projects where blockout depth limitations exist.

Metal edge rails may be field spliced using weld procedures provided by the strip seal expansion joint manufacturer. However, elastomeric strip seal elements shall not be field spliced. Each elastomeric strip seal element shall be furnished and installed as a single, continuous piece across the full width of the bridge deck.

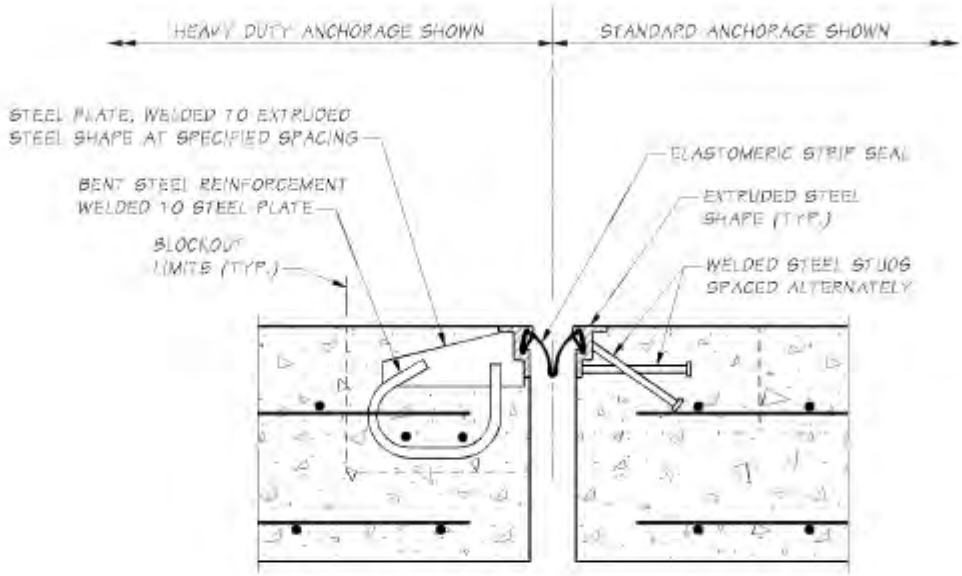

Strip Seal Joint
Figure 9.1.4-2

Design Example:

Given: A steel plate girder bridge has a total length of 600 feet. It is symmetrical and has a strip seal expansion joint at each end. These expansion joints are skewed 10°. Interior piers provide negligible restraint against longitudinal translation. Bridge superstructure average temperatures are expected to range between –30°F and 120°F during the life of the bridge. Assume a normal installation temperature of 64°F.

Find: Required Type A and Type B strip seal sizes and construction gap widths at 40°F, 64°F, and 80°F. Type A strip seals have a ½ in. gap at full closure. Type B strip seals are able to fully close, leaving no gap.

Solution:

Step 1: Calculate temperature and shrinkage movement.

Temperature: $\otimes_{temp}$ = ½(.0000065)(150°F)(600′)(12″/′) = 3.51″

Shrinkage: Δ_{shrink} = 0.0 (no shrinkage; μ = 0.0 for steel bridge)

Total deck movement at each joint: = 3.51″

$\otimes_{temp\text{-}normal\text{-}closing}$ = (120°F - 64°F)/(120°F + 30°F)(3.51″)(cos 10°)
= 1.29″

$\otimes_{temp\text{-}normal\text{-}opening}$ = (64°F + 30°F)/(120°F + 30°F)(3.51″)(cos 10°)
= 2.17″

Step 2: Determine strip seal size required. Assume a minimum construction gap width of 1½″ at 64°F.

Type A: Construction gap width of 1½″ at 64°F will not accommodate 1.29″ closing with a ½″ gap at full closure. Therefore, minimum construction gap width at 64°F must be 1.29″ + 0.50″ = 1.79″

Size required = 1.79″ + 2.17″ = 3.96″ →Use 4″ strip seal

Type B: Construction width of 1½″ at 64°F is adequate.

Size required = 1.50″ + 2.17″ = 3.67″ →Use 4″ strip seal

Step 3: Evaluate construction gap widths for various temperatures for a 4″ strip seal.

Type A: Required construction gap width at 64°F = 0.50″ + 1.29″ = 1.79″

Construction gap width at
40° F = 1.79″ + (64°F–40°F)/(64°F + 30°F)·(2.17″) = 2.34″

Construction gap width at
80°F = 1.79″ - (80°F - 64°F)/(120°F - 64°F)·(1.29″)=1.42″

Type B: Construction gap width of 1½″ at 64°F is adequate.

Construction gap width at
40°F = 1.50″ + (64°F - 40°F)/(64°F + 30°F)·(2.17″) = 2.05″

Construction gap width at
80°F = 1.50″ - (80°F - 64°F)/(120°F - 64°F)·(1.29″) = 1.13″

Conclusion: Use a 4 in. strip seal. Construction gap widths for installation at superstructure average temperatures of 40° F, 64° F, and 80° F are 2-5/16″, 1-13/16″, and 1-7/16″ for Type A and 2-1/16″, 1½″, and 1⅛″ for Type B. (Note that slightly larger gap settings could be specified for the 4″ Type B strip seal in order to permit the elastomeric glands to be replaced at lower temperatures at the expense of ride smoothness across the joint.)

C. Bolt-down Panel Joints

Bolt-down panel joints, sometimes referred to as expansion dams, are preformed elastomeric panels internally reinforced with steel plates. Bridging across expansion gaps, these panels are bolted into formed blockouts in the concrete deck with either adhesive or expansive anchors. Expansion is accompanied by stress and strain across the width of the bolt-down panel between anchor bolts.

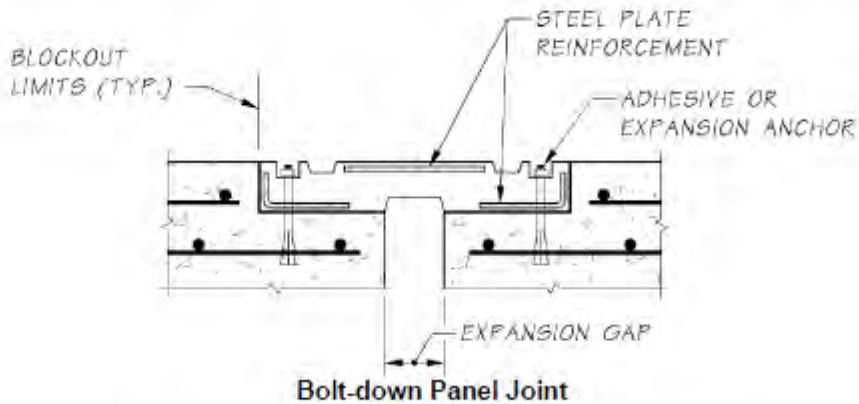

Bolt-down Panel Joint
Figure 9.1.4-3

Because of durability concerns, we no longer specify bolt-down panel joints. On bridge overlay and expansion joint rehabilitation projects, bolt-down panels are being replaced with rapid-cure silicone sealant joints or strip seal joints. For rehabilitation of bridges having low speed or low volume traffic, existing bolt-down panel joints may be retained and/or selective damaged panels replaced.

9.1.5 Large Movement Range Joints

Steel finger and modular joints have all been used in the past for accommodating large movement ranges.

A Steel Finger Joints

Finger joints have been successfully used to accommodate medium and large movement ranges. They are generally fabricated from steel plate and are installed in cantilevered configurations. The steel fingers must be designed to support traffic loads with sufficient stiffness to preclude excessive vibration. In addition to longitudinal movement, finger joints must also accommodate any rotations or differential vertical deflection across the joint. Finger joints may be fabricated with a slight downward taper toward the ends of the fingers in order to minimize potential for snowplow blade damage. Unfortunately, finger joints do not provide an effective seal against water infiltration. Elastomeric and metal troughs have been installed beneath steel finger joints to catch and redirect runoff water. However, in the absence of routine maintenance, these troughs clog and become ineffective.

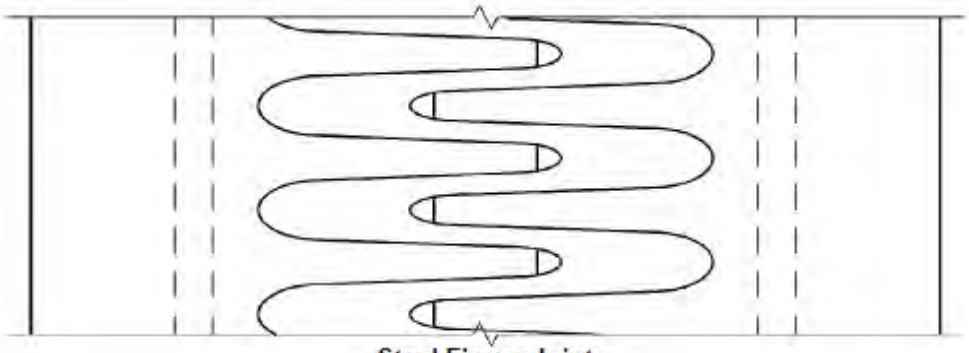

Steel Finger Joint
Figure 9.1.5-1

B. Modular Expansion Joints

Modular expansion joints are complex structural assemblies designed to provide watertight wheel load transfer across expansion joint openings. These systems were developed in Europe and introduced into the U.S. in the 1960s. To date, modular expansion joints have been designed and fabricated to accommodate movements of up to 85 in. In Washington State, the largest modular expansion joints are those on the new Tacoma Narrows Bridge. These joints accommodate 48 in. of service movement and 60 in. of seismic movement. Modular expansion joints are generally shipped in a completely assembled configuration. Although center beam field splices are not preferable, smaller motion range modular expansion joints longer than 40 ft. may be shipped in segments to accommodate construction staging and/ or shipping constraints.

1. Operational Characteristics

Modular expansion joints comprise a series of steel center beams oriented parallel to the expansion joint axis. Elastomeric strip seals or box-type seals attach to adjacent center beams, preventing infiltration of water and debris. The center beams are supported on support bars, which span in the primary direction of anticipated movement. The support bars are supported on sliding bearings mounted within support boxes. Polytetrafluoroethylene (PTFE)–stainless steel interfaces between elastomeric support bearings and support bars facilitate the unimpeded translation of the support bars as the expansion gap opens and closes. The support boxes generally rest on either cast-in-place concrete or grout pads installed into a preformed blockout.

Modular expansion joints can be classified as either single support bar systems or multiple support bar systems. In multiple support bar systems, a separate support bar supports each center beam. In the more complex single support bar system, one support bar supports all center beams at each support location. This design concept requires that each center beam be free to translate along the longitudinal axis of the support bar as the expansion gap varies. This is accomplished by attaching steel yokes to the underside of the center beams. The yoke engages the support bar to facilitate load transfer. Precompressed elastomeric springs and PTFE – stainless steel interfaces between the underside of each center beam and the top of the support bar and between the bottom of

the support bar and bottom of the yoke support each center beam and allow it to translate along the longitudinal axis of the support bar. Practical center beam span lengths limit the use of multiple support bar systems for larger movement range modular expansion joints. Multiple support bar systems typically become impractical for more than nine seals or for movement ranges exceeding 27". Hence, the single support bar concept typifies these larger movement range modular expansion joints.

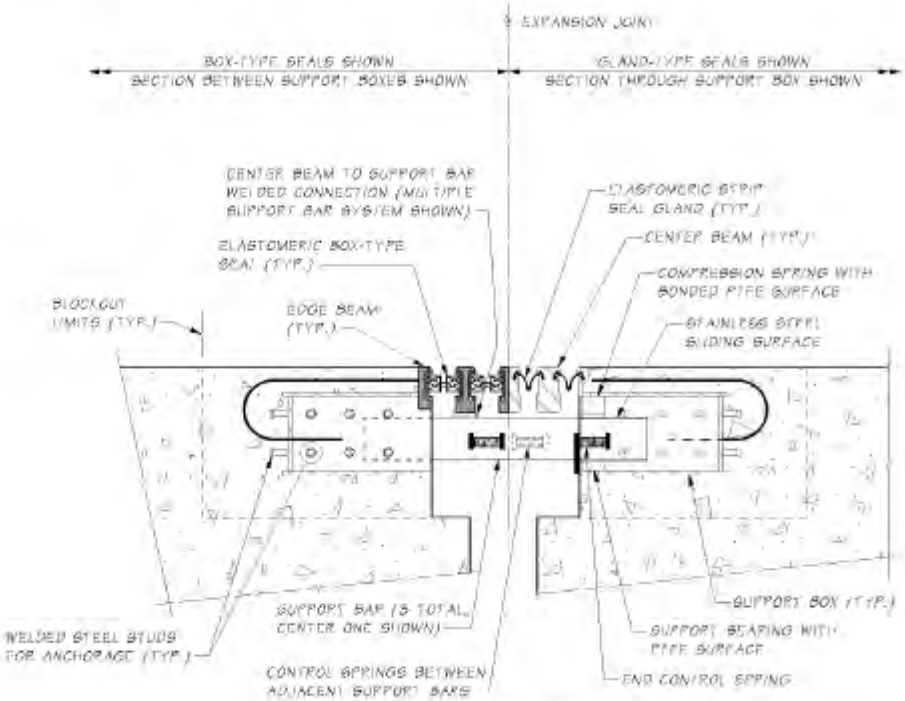

Modular Expansion Joint
Figure 9.1.5-2

The highly repetitive nature of axle loads predisposes modular expansion joint components and connections to fatigue susceptibility, particularly at center beam to support bar connections and center beam field splices. Bolted connections of center beams to support bar have demonstrated poor fatigue endurance. Welded connections are preferred, but must be carefully designed, fatigue tested, fabricated, and inspected to assure satisfactory fatigue resistance. WSDOT'S current General Special Provisions for modular expansion joints requires stringent fatigue-based design and test criteria for modular expansion joints. This special provision also specifies criteria for manufacturing, shipping, storing, and installing modular expansion joints.

Modular expansion joints may need to be shipped and/or installed in two or more pieces and subsequently spliced together in order to accommodate project staging and/or practical shipping constraints. Splicing generally occurs after concrete is cast into the blockouts. The center beams are the elements that must be connected. These field connections are either welded, bolted, or a hybrid combination of both.

Center beam field splices have historically been the weak link of modular expansion joints because of their high fatigue susceptibility and their tendency to initiate progressive zipper-type failure. The reduced level of quality control achievable with a field operation in regard to a shop operation contributes to this susceptibility. Specific recommendations regarding center beam field splices will be subsequently discussed as they relate to shop drawing review and construction.

2. Movement Design

Calculated total movement range establishes modular expansion joint size. WSDOT policy has been to provide a 15 percent factor of safety on these calculated service movements. Current systems permit approximately 3 in. of movement per elastomeric seal element; hence total movement rating provided will be a multiple of 3 in. To minimize impact and wear on bearing elements, the maximum gap between adjacent center beams should be limited to about 3½ in.

To facilitate the installation of the modular joints at temperatures other than the 64°F normal temperature, the contract drawings shall specify expansion gap distance face-to-face of edge beams as a function of the superstructure temperature at the time of installation.

Modular expansion joint movement design relationships can be expressed as:

$$n = MR / mr$$
$$G_{min} = (n - 1) \cdot w + n \cdot g$$
$$G_{max} = G_{min} + MR$$

Where MR = total movement range of the modular joint

mr = movement range per elastomeric seal
n = number of seals
$n - 1$ = number of center beams
w = width of each center beam
g = minimum gap per strip seal element at full closure
G_{min} = minimum distance face-to-face of edge beams
G_{max} = maximum distance face-to-face of edge beams

Design Example:

Given: Two cast-in-place post-tensioned concrete box girder bridge frames meet at an intermediate pier where they are free to translate longitudinally. Skew angle is 0° and the bridge superstructure average temperature ranges from 0°F to 120°F. A modular bridge expansion joint will be installed 60 days after post-tensioning operations have been completed. Specified creep is 150 percent of elastic shortening. Assume that 50 percent of total shrinkage has already occurred at installation time. The following longitudinal movements were calculated for each of the two frames:

	Frame A	Frame B
Shrinkage	1.18″	0.59″
Elastic shortening	1.42″	0.79″
Creep (1.5 × Elastic shortening)	2.13″	1.18″
Temperature fall (64°F to 0°F)	3.00″	1.50″
Temperature rise (64°F to 120°F)	2.60″	1.30″

Find: Modular expansion joint size required to accommodate the total calculated movements and the installation gaps measured face-to-face of edge beams at superstructure average temperatures of 40°F, 64°F, and 80°F.

Solution:

Step 1: Determine modular joint size.

Total opening movement (Frame A) $= (0.5)\cdot(1.18'') + 2.13'' + 3.00''$
$= 5.72''$

Total opening movement (Frame B) $= (0.5)\cdot(0.59'') + 1.18'' + 1.50''$
$= 2.98''$

Total opening movement (both frames) $= 5.72'' + 2.98'' = 8.70''$

Total closing movement (both frames) $= 2.60'' + 1.30'' = 3.90''$

Determine size of the modular joint, including a 15 percent allowance:

$1.15\cdot(8.70'' + 3.90'') = 14.49''$ →Use a 15 in. movement rating joint

Step 2: Evaluate installation gaps measured face-to-face of edge beams at superstructure average temperatures of 40°F, 64°F, and 80°F.

$MR = 15''$ (movement range)
$mr = 3''$ (maximum movement rating per strip seal element)
$n = 15''/3'' = 5$ strip seal elements
$n - 1 = 4$ center beams
$w = 2.50''$ (center beam top flange width)
$g = 0''$
$G_{min} = 4\cdot(2.50'') + 4\cdot(0'') = 10''$
$G_{max} = 10'' + 15'' = 25''$
$G_{64F} = G_{min}$ + Total closing movement from temperature rise
$= 10'' + 1.15\cdot(3.90'') = 14.48''$ →Use 14½″
$G_{40F} = 14.5'' + [(64°F - 40°F)/(64°F - 0°F)]\cdot(3.00'' + 1.50'') = 16.19''$
$G_{80F} = 14.5'' - [(80°F - 64°F)/(120°F - 64°F)]\cdot(2.60'' + 1.30'') = 13.39''$

Check spacing between center beams at minimum temperature:

$G_{0F} = 14.50'' + 8.70'' = 23.20''$

Spacing $= [23.20'' - 4(2.50'')]/5 = 2.64'' < 3½''$ →OK

Check spacing between center beams at 64° F for seal replacement:

Spacing $= [14.50'' - 4(2.50'')]/5 = 0.90'' < 1.50''$ Therefore, the center beams must be mechanically separated in order to replace strip seal elements.

Conclusion: Use a 15 in. modular expansion joint. The gaps measured face-to-face of edge beams at installation temperatures of 40°F, 64°F, and 80°F are 16-3/16 in, 14½ in and 13⅜ in, respectively.

3. **Review of Shop Drawings and Structural Design Calculations**

The manufacturer's engineer generally performs structural design of modular expansion joints. The project special provision requires that the manufacturer submit structural calculations, detailed fabrication drawings, and applicable fatigue tests for approval by the Engineer. All structural elements must be designed and detailed for both strength and fatigue. Additionally, modular expansion joints should be detailed to provide access for inspection and periodic maintenance activities, including replacement of seals, control springs, and bearing components.

WSDOT's General Special Provision for modular expansion joints delineates explicit requirements for their design, fabrication, and installation. This comprehensive special provision builds upon WSDOT's past experience specifying modular expansion joints and incorporates the NCHRP Report 402 *Fatigue Design of Modular Bridge Expansion Joints*. The special provisions include requirements for the shop drawings, calculations, material certifications, general fabrication methods, corrosion protection, shipping and handling, storage, installation, fatigue testing, applicable welding codes and certifications, quality control, and quality assurance. It is strongly advised to carefully review this special provision before reviewing modular expansion joint shop drawings and calculations.

Any structural details, including connections, that do not clearly correspond to specific fatigue categories depicted in the LRFD shall be fatigue tested in accordance with the requirements stipulated in the special provision. Documentation of these tests shall accompany the shop drawing submittal.

As stated in the special provisions, the Contractor shall submit documentation of a quality assurance program distinctly separate from in-house quality control. Quality assurance shall be performed by an independent agency and shall be provided by the manufacturer.

Weld procedures shall be submitted for all shop and field welds. These procedures stipulate welding process employed, end preparation of the component welded, weld metal type, preheat temperature, and welder certifications. It is critical that all welds be made in strict accordance with specifications and under very careful inspection.

Field splices of center beams require particularly careful review. WSDOT's special provision recommends several mitigating measures to minimize fatigue susceptibility of center beam field splices. These measures include reducing support box spacing and optimizing fatigue stress range at field splice locations. Keep in mind that the confined nature of the space in which a welder must work can make these welds very difficult to complete. The American Welding Society (AWS) Welding Code prequalifies certain end geometries because experience has shown that high quality welds can be achieved.

Non-prequalified center beam end geometries require the Contractor to submit a Procedure Qualification Record documenting that satisfactory weld quality has been achieved using samples before welding of the actual field piece. The Contractor will generally want to avoid the additional expense associated with these tests and will thus specify a prequalified end geometry.

WSDOT's special provisions require that adequate concrete consolidation be achieved underneath all support boxes. The reviewer should ascertain that the shop drawings detail a vertical minimum of 2 in. between the bottom of each support box and the top of the concrete blockout. Alternatively, when vertical clearance is minimal, grout pads can be cast underneath support boxes before casting the concrete within the blockout.

4. Construction Considerations

Temperature adjustment devices are temporarily welded to the modular expansion joints to permit the Contractor to adjust the modular joint width so that it is consistent with the superstructure temperature at the time concrete is placed in the blockout. The temperature devices effectively immobilize the modular joint. Once the concrete begins to set up, it is critical to remove these devices as soon as possible. If the modular expansion joint is prevented from opening and closing, it will be subject to very large, potentially damaging, forces.

Prior to placement of concrete into the blockout, temporary supports generally bridge across the expansion gap, suspending the modular expansion joint from the bridge deck surface. Following concrete placement, the modular joint is supported by bearing of the support boxes on concrete that has consolidated underneath the blockout. The inspector should assure that adequate concrete consolidation is achieved underneath and around the support boxes.

Following delivery of the modular expansion joint to the jobsite and prior to its installation, the inspector should ascertain that center beam end geometries at field weld splice locations match those shown on the approved weld procedure.