Bridge No. 5/337

Martin Way O'Xing Ceva-Crete Expansion Joint System

WA-RD 222.1

Post Construction Report
September 1990

Washington State Department of Transportation
Planning, Research and Public Transportation Division

in cooperation with the
United States Department of Transportation
Federal Highway Administration

ABSTRACT

This report details the installation of a Ceva-Crete Expansion Joint system on an I-5 bridge in Olympia, Washington. The Ceva-Crete system employs an elastomeric concrete that is vulcanized in place to handle impact loads on the joint and a low density closed cell material (Evazote 50) that is epoxied to the steel nosing of the joint to act as the seal.

The performance of the joint system will be evaluated over a five year period.

WASHINGTON STATE DEPARTMENT OF TRANSPORTATION

TECHNICAL REPORT STANDARD TITLE PAGE

1. REPORT NO. WA-RD 222.1	2. GOVERNMENT ACCESSION NO.	3. RECIPIENT'S CATALOG NO
4. TITLE AND SUBTITLE Martin Way O'Xing Ceva-Crete Expansion Joint System Bridge No. 5/337 E & W		5. REPORT DATE September 1990
		6. PERFORMING ORGANIZATION CODE WA 86-03A
7. AUTHOR(S) Tom H. Roper and Edward H. Henley, Jr.		8. PERFORMING ORGANIZATION REPORT NO
9. PERFORMING ORGANIZATION NAME AND ADDRESS Washington State Department of Transportation Transportation Building Olympia, WA 98504		10 WORK UNIT NO.
		11. CONTRACT OR GRANT NO. None
12. SPONSORING AGENCY NAME AND ADDRESS		13. TYPE OF REPORT AN PERIOD COVERED Post Construction September 1990
		14. SPONSORING AGENCY CODE

15. SUPPLEMENTARY NOTES

The study was conducted in cooperation with the U.S. Department of Transportation Federal Highway Administration.

16. ABSTRACT

This report details the installation of a Ceva-Crete Expansion Joint system on an I-5 bridge in Olympia, Washington. The Ceva-Crete system employs an elastomeric concrete that is vulcanized in place to handle impact loads on the joint and a low density closed cell material (Evazote 50) that is epoxied to the steel nosing of the joint to act as the seal.

The performance of the joint system will be evaluated over a five year period.

17 KEY WORDS expansion joints bridge deck rehabilitation		18. DISTRIBUTION STATEMENT	
19. SECURITY CLASSIF. (of this report) Unclassified	20. SECURITY CLASSIF. (of this page) Unclassified	21. NO. OF PAGES 20	22. PRICE

DOT FORM 310-022 (11/86) -1216-

MARTIN WAY O'XING
CEVA-CRETE EXPANSION
JOINT SYSTEM

Bridge No. 5/337

by

Tom H. Roper
and
Edward H. Henley, Jr.
Bridge and Structures Office
Washington State Department of Transportation
Olympia, WA 98504-5201

POST CONSTRUCTION REPORT

Experimental Project WA 86-03A

September 1990

Prepared for Washington State Department of Transportation
in cooperation with the United States Department of Transportation
Federal Highway Administration.

TABLE OF CONTENTS

VICINITY MAP

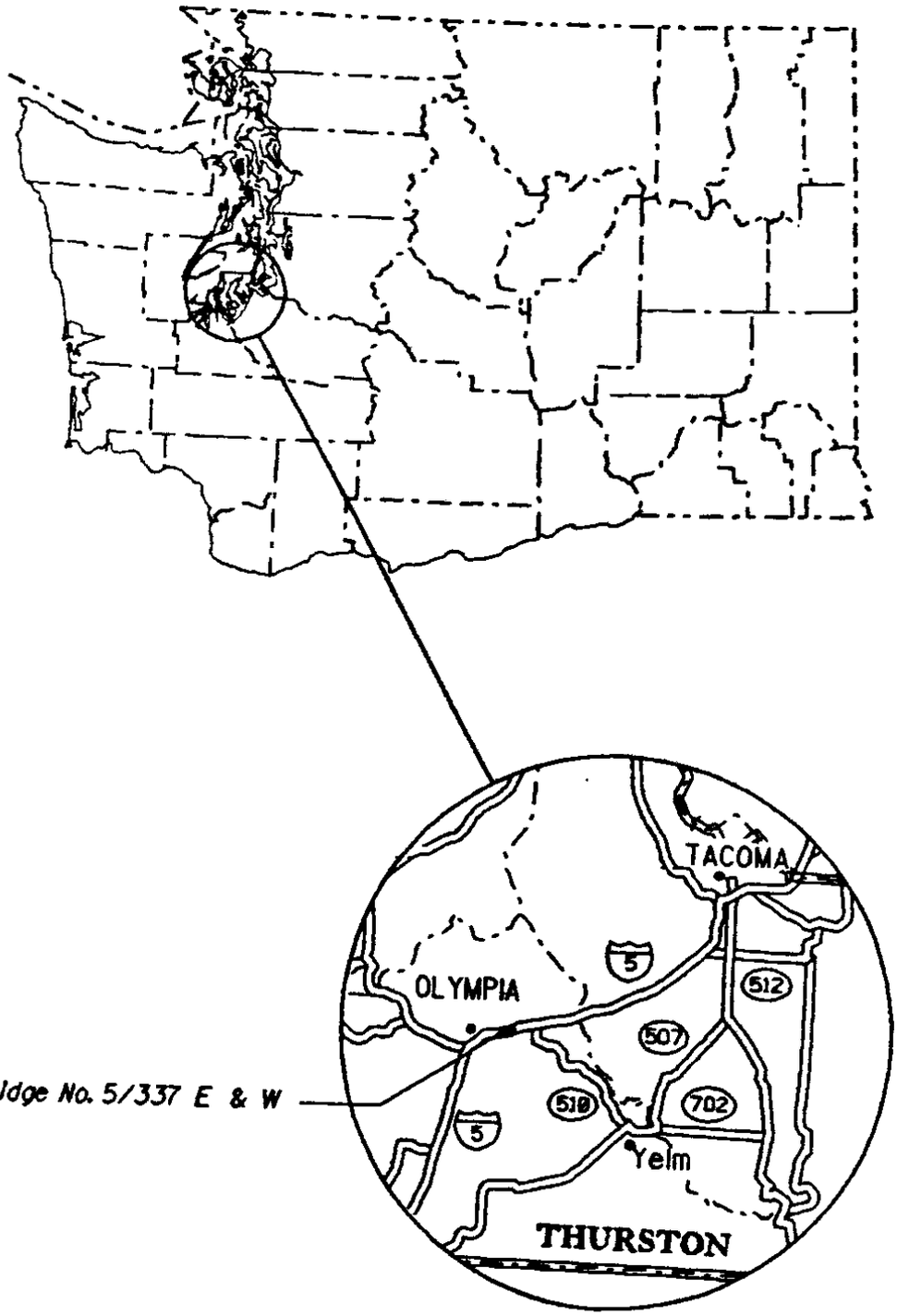

PROJECT SITE

INTRODUCTION

Bridge expansion joints pose a special problem in the Washington State Department of Transportation (WSDOT) Bridge Deck Management System. These devices are subject to repeated heavy dynamic loading, and premature failure has occurred in many cases. Delaminations in the deck concrete adjacent to the expansion joints, caused by salt contamination, are common. Construction is also a problem. The ability to place concrete with good consolidation around the expansion joint requires careful quality control in the field. If voids are found in the concrete behind the expansion dam, epoxy injection is necessary to restore the integrity of the joint anchorage.

It is WSDOT policy, as part of the Bridge Deck Management System, to make expansion joints watertight, allowing surface water to run off the deck to the bridge drains. This is to prevent water and contaminants from leaking onto the substructure and causing corrosion and appearance problems.

The Ceva Prefabricated Joint System uses two relatively new products that appear to enhance the service life of the expansion joint and make it watertight: 1.) Ceva-Crete is an elastomeric concrete that is poured-in-place to bond the steel expansion joint system to the deck. The expansion joint system employs a steel nosing, but no reinforcement extends between the elastomeric concrete and the existing deck concrete. The Ceva-Crete is reported to have the ability to resist wear and the impact loads from heavy trucks. The material also resists environmental detriments. 2.) The Evazote 50 expansion joint seal material, which is installed between the steel nosings (see Appendix A), is designed to withstand relatively large repetitive joint movements. Its wear and non-corrosion properties are claimed to be excellent, and it is resistant to oils and greases. Its resilience is reported to cause rocks and dirt to bounce off.

The purpose of this experimental project is to gain knowledge about the effectiveness of the Ceva-Crete Expansion Joint System over time and to gain knowledge about field installation techniques for use on future contracts.

STUDY SITE

Martin Way O'xing 5/337 E & W in the Olympia area was selected as the site for an experimental installation of the Ceva-Crete Expansion Joint System. Both east and west structures were widened and a 1-1/2 inch thick Latex Modified Concrete overlay was installed over the entire deck. The existing and new transverse joints both received

a Ceva-Crete Expansion Joint system. A total of 664 lineal feet of transverse joint was installed.

CONSTRUCTION SUMMARY
General

The project, Sleater Kinney to Martin Way Interchange, included replacement of the existing expansion joints with the Ceva 300 System. As shown in Appendix B, the system consisted of an angle iron nosing, sinusoidal anchoring system of #4 rebar, Ceva-Crete concrete, and an Evazote 50 compression seal. Total contract costs were $105.85 per lineal foot.

A manufacturer's representative was on the site during all installation of the Ceva 300 Joint System. In most situations, the contractor followed the manufacturer's advice and directions.

Preparatory Work
Prior to Latex Modified Concrete Installation

Prior to any Stage 1 (first half of bridge width) expansion joint work, the existing bridge deck was scarified. This scarification caused excessive concrete spalling at the existing joint edges, resulting in additional Ceva-Crete usage. During Stage 2 (second half of bridge width), this spalling problem was avoided by doing some expansion joint work prior to scarification. The contractor sawcut the existing bridge deck 6 inches back from each existing joint, to a depth of 3/4 inch, and chipped out the area using 15 lb. chipping guns. Heavier pneumatic hammers were found to create spalling in the existing joint area.

The contractor then placed 1-1/2 inch by 12 inch Styrofoam inside the cutout area to eliminate latex from entering into the joint area.

Preparatory Work
After Latex Modified Concrete Installation

After the L.M.C. cure, the joint areas were sawcut again and the Styrofoam was removed. The joint areas were sandblasted clean and then covered with plastic. To prevent metal corrosion and enhance bond, the angle iron and sinusoidal rebar assembly (previously sandblasted) were painted with an epoxy mixture. The angle iron was then covered to protect it from debris and contaminants.

After the epoxy dried, the assembly was placed in the joint areas (after removing the plastic cover) and preleveled.

The assembly was then removed and the vertical joint surfaces were painted with an epoxy mixture. The assembly was placed back into the joint areas and leveled flush (with leveling bars and vertical studs) with the latex deck.

Ceva-Crete Installation Procedures

The Ceva-Crete aggregates were placed into an electric power mixing drum and heated to 120 degrees F with a propane blow torch. Simultaneously, the epoxy parts A and B were heated in heating chambers with propane blow heaters to 90 degrees F. When epoxy parts A and B were to the proper temperature, they were mixed with a hand held drill and mixing paddle for five minutes or until the mixture showed no signs of marbling. The heated aggregate and the mixed epoxy were then blended together in a grout mixer.

The epoxy-aggregate mixture was then quickly transferred to a wheelbarrow, scooped into the joint area, rodded beneath the sinusoidal bars and angle iron, then finished flush to the deck and angle iron using hot trowels.

After the joint areas were filled and finished smooth, the heating shields were placed over the joints and propane heaters were used at the ends to raise the temperature to 170 degrees F for two hours.

The leveling bars and vertical studs were removed when the joint areas were sufficiently cool and the remainder of the vertical studs were ground smooth.

Evazote 50 Compression Seal Installation Procedures

The angle iron vertical faces forming the expansion joint were sandblasted clean and the top horizontal surfaces were covered with duct tape. The Evazote was laid out adjacent to the joint with enough excess length to heat weld Stage 1 to Stage 2 underneath the temporary traffic barrier. The Evazote was cut using a standard hack saw. The connections were made with a 10 second exposure of each cut face to a hot plate iron, then the faces were firmly pressed together.

Each part of the three-part bonding agent was stirred individually, then they were mixed together thoroughly. The bonding agent was brushed onto the sides of the Evazote and the angle iron, then the Evazote was pushed into the joint and recessed 1/8 inch below the top of the joint nosing. A trowel was used to clean excess bonding agent from the top surface of the joint material. The duct tape was removed from the top surface of the angle iron to complete the installation.

Construction Time
(3/29/88 to 7/6/88)

Man-hours: Stage 2	
Preparing joint-sawcut and chip	88 hr.
Layout steel, sandblast, prelevel and prime	48 hr.
Weld angle iron to stage 1	8 hr.
Prepare equip. and place Ceva-Crete	66 hr.
Prepare nosing for Evazote 50	12 hr.
Heatweld, place and clean Evazote seal	17 hr.
Stage 2:	239 hr

Stage 1 operation similar, less welding.

Stage 1:	231 hr.
Total Project Man-hours	470 hr.

Equipment List

Type	Quantity	
Sandblaster	1	
Generator	2	
Electrical Cord Leads	4	
Drills (1/2, 3/4)	1	with backup
2 Cubic Ft. Electric Mixer	1	With backup
Trowels	3	
Shovels	2	
Small Garden Hose	1	
Wheelbarrow	1	
Heaters (Hortz, Blower Type)	2	15,000 BTU min.
Screwdrivers	2	
Clean 5 Gallon Buckets	2	
Welder & Attachment	1	
Heating Chamber	1	

QUALITY CONTROL PERFORMANCE

A representative of the Ceva-Crete Expansion Joint System was on the site during installation, and the contractor followed the manufacturer's advice and directions, in most situations.

As required in the contract Special Provisions, the joint was water tested after installation. The joint was flooded with water and inspected from below for leakage. No leakage was observed.

INSTALLATION PROBLEMS

On two separate occasions, the Ceva-Crete was heated above its ideal mixing temperature, and within one minute the material had set up inside the mixer. This problem, together with the spalling mentioned in the first paragraph of "Preparatory Work" (prior to L.M.C. installation) and existing deck irregularities, caused the contractor to overrun his anticipated Ceva-Crete quantities.

RECOMMENDATIONS

1. The contractor and the inspector should be aware of the importance of temperature control.

2. It is recommended that the specifications require a back-up mixer to be on the site during Ceva-Crete installation.

3. The specifications should recommend that the contractor have more excess product on site than the anticipated 5% wastage. This would provide insurance against an untimely delay, should waste volume be higher than anticipated during joint construction.

APPENDIX A

MANUFACTURER RECOMMENDED INSTALLATION PROCEDURES

INSTALLATION PROCEDURE FOR CEVA CRETE ELASTOMERIC CONCRETE AND EXPANSION JOINT

---

1. Set up necessary traffic control.

2. Saw cut new asphalt to exact plan dimensions checking both width and depth against contract documents or to "sound" concrete. Remove all waste asphalt keeping vertical edge neat.

3. Place Ceva 300 System into saw cut area.

4. Level and set joint opening as per plan specification making sure spacer bolts are tightly fastened. (Angle iron might shift during first stages of installation if spacer bolts are not tightly secured.)

5. Sandblast all surfaces of steel, concrete, and asphalt against which Elastomeric Concrete is to be placed. Remove all loose material.

6. Prepare the primer by mixing one part "A" to one part "B", then add 20% Xylene, then mix well and brush. (Note: Approximately 1/2 gallon of "A" with 1/2 gallon of "B" and 20% Xylene will prime all needed surfaces of a 40 foot joint. Rubber gloves should be worn by all persons working with or near the material.)

7. Prime vertical edge and steel areas to be in contact with Elastomeric Concrete. Existing horizontal concrete surface not to be primed.

8. Mix 2 1/2 gallons "A" with 2 1/2 gallons "B" in a clean 5 gallon pail until there is no marbling effect in the material. This should take about five minutes with a good drill or paddle.

9. Put one five gallon pail with aggregate into your mixer. A smaller electric type mixer will work better than a large concrete mixer. After putting in the one pail of aggregate, add the <u>mixed</u> Ceva Resin. Next, add another five gallon pail of aggregate. You will now have one part mixed resin to two parts aggregate. (5 gallons to 10 gallons.) On cool or windy days, warm the aggregate to an average mixing temperature of 110-120°F, and Resin to 80-90°F before mixing to aid in the ease of mixing. Outer edge of aggregate pail will be much warmer than center of pail. Average temperature should be 110°-120°F. This can be done in the heating chamber on the job. Allow the material to mix in the

mixer until there is no "dry" aggregate. The Ceva Mix should be uniformly black before dumping into a wheel barrow. Be sure the primer has been properly applied as stated in Note 7 above.

10. Dump the properly mixed Ceva Crete into the prepared area behind the expansion joint, making sure that it is thoroughly packed under all steel areas and anchors (i.e., using piece of rebar) trowel smooth. (Approximate pot life on mixed Ceva Crete is 20-30 minutes.)

11. Continue with additional batches of Ceva Crete to fill void area.

12. Place heating chamber over entire poured joint and heat to an average temperature of 150°-170°F for a minimum of 2 hours.

13. Let Ceva 300 Joint System cool for 1 hour before resuming traffic flow.

APPENDIX B

PLAN AND INSTALLATION DETAILS

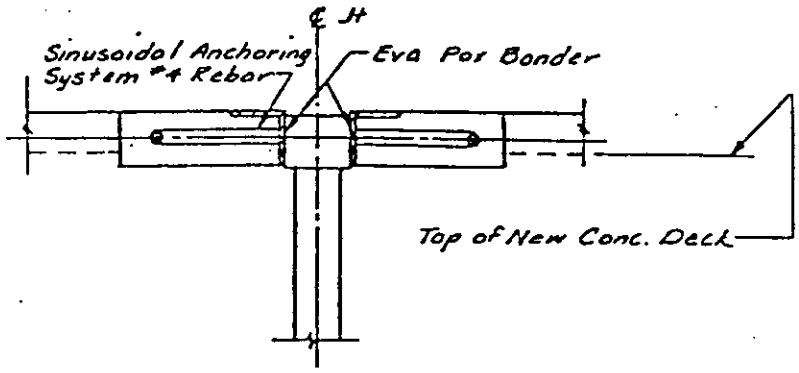

NEW JT.

For details not shown, see below

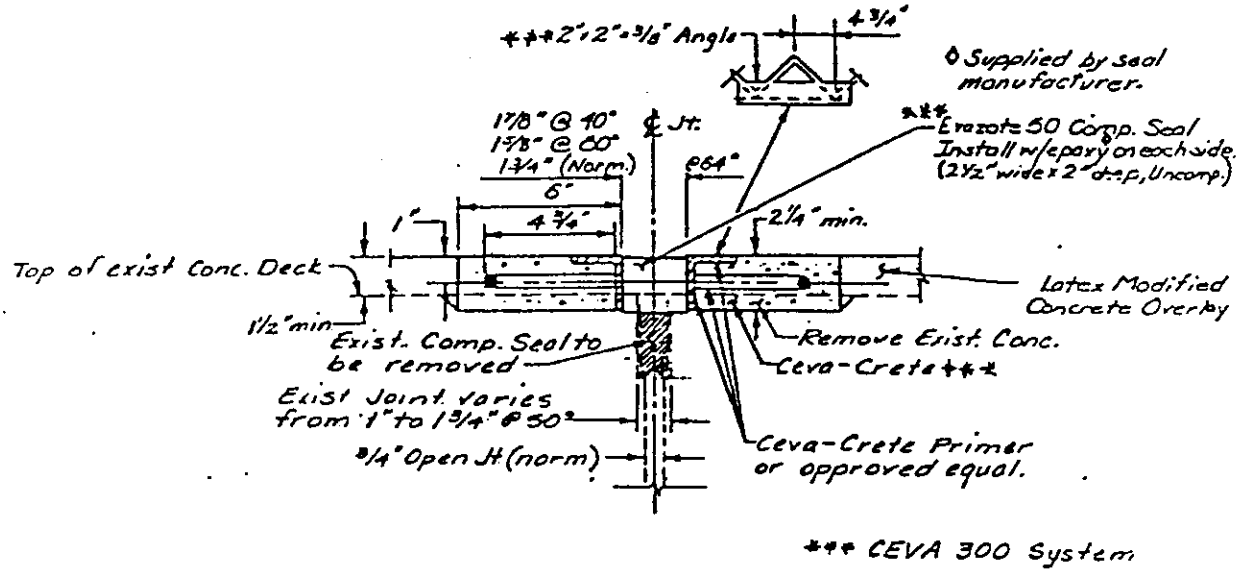

EXISTING JT.

SECTION THRU DECK JOINT

APPENDIX C

TESTING AND ANALYSIS COSTS

CEVA-CRETE EXPANSION JOINT SYSTEM
TESTING AND ANALYSIS COSTS

Responsible Unit	Work Item	Post Const.	Year** 1	2	3	4	5	Totals
Bridge Branch	Visual Rating $91/hr*	(3 hrs) $273	(3 hrs) $300	(3 hrs) $330	(3 hrs) $363	(3 hrs) $400	(3 hrs) $440	$2106
Dist. 3 Maint.	Traffic Control $30/hr	(4 hrs) $120	(4 hrs) $132	(4 hrs) $145	(4 hrs) $160	(4 hrs) $176	(4 hrs) $194	$927
Bridge Branch	Analysis & Reporting $30/hr	(40 hrs) $1200	(4 hrs) $132	(4 hrs) $145	(4 hrs) $160	(4 hrs) $176	(40 hrs) $1940	$3753
		$1593	$564	$620	$683	$752	$2574	$6786
								-1593
Total Contract Funding		$1593	Total Evaluation Funding					$5193

* 3 men at $30/hr

**10% Annual Inflation Rate Assumed

APPENDIX D

GENERAL LAYOUT

SEC. 16, T.18 N., R.1 W., W.M.

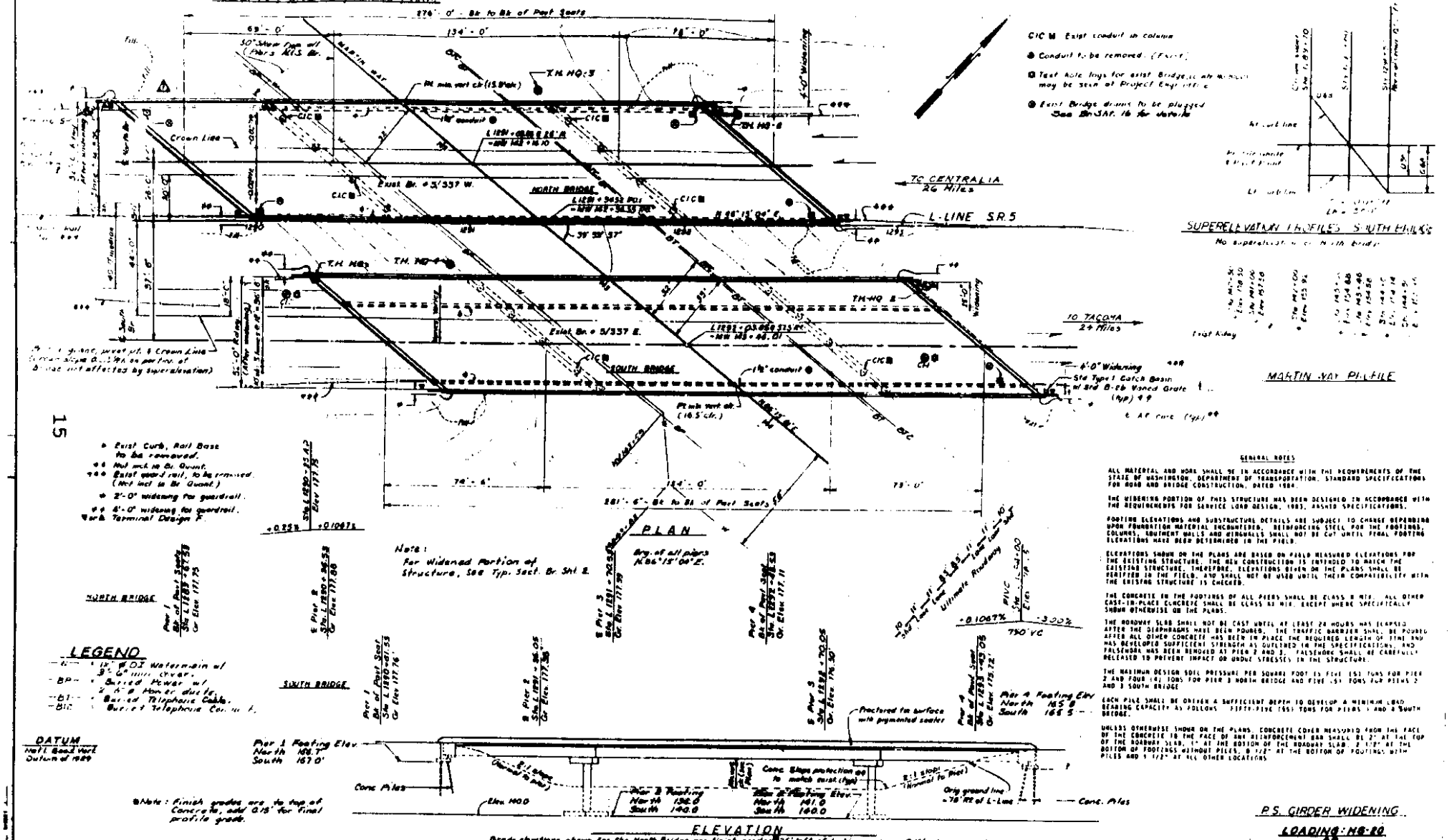

APPENDIX E

PROJECT PHOTOGRAPHS

Heating aggregate in an electric power mixing drum with propane blow torch.

Mixing Part A and Part B with a hand held drill and mixing paddle.

Transferring Ceva-Crete mix from grout mixer to Wheelbarrow.

Shoveling Ceva-Crete mix into the prepared joint.

Rodding and troweling Ceva-Crete mix.

Heat shields and propane blow heaters.

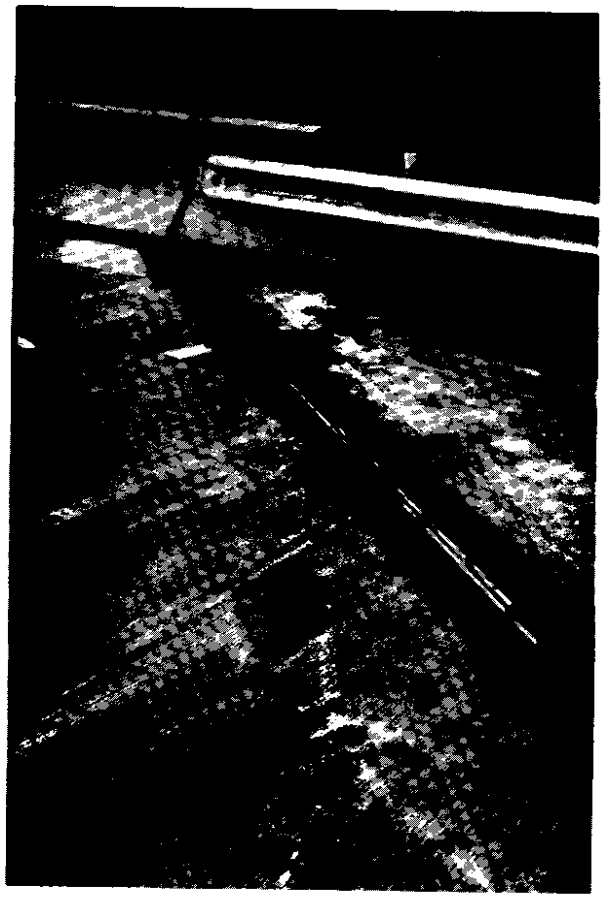

Leveling bars and vertical studs.

Heat shields for vulcanizing over joint.